FANUC SERVO AMPLIFIER αi series

DESCRIPTIONS

РЕМСТАНМАШ
ТЕХНОЛОГИИ ДЛЯ ПРОИЗВОДСТВА

B-65282EN/06

- No part of this manual may be reproduced in any form.
- All specifications and designs are subject to change without notice.

The products in this manual are controlled based on Japan's "Foreign Exchange and Foreign Trade Law". The export from Japan may be subject to an export license by the government of Japan.
Further, re-export to another country may be subject to the license of the government of the country from where the product is re-exported. Furthermore, the product may also be controlled by re-export regulations of the United States government.
Should you wish to export or re-export these products, please contact FANUC for advice.

In this manual we have tried as much as possible to describe all the various matters.
However, we cannot describe all the matters which must not be done, or which cannot be done, because there are so many possibilities.
Therefore, matters which are not especially described as possible in this manual should be regarded as "impossible".

General Safety Precautions

- When an abnormality such as an alarm or a hardware failure occurs, the operations described in the specifications are not guaranteed unless otherwise specifically noted. When action corresponding to the abnormality is specifically described, take the action. When no action is described, please contact FANUC.
- The signals and functions described in the specifications cannot be used separately for safety functions unless otherwise described as being usable for the safety functions. Their specifications are not assumed to be used as the safety functions in this case, an unexpected danger may be caused. For information about the safety functions, please contact FANUC.
  Generally, the safety functions represent functions that protect the operators from machine danger.
- A wrong device connection or setting can lead to unpredictable operation. When starting to operate the machine for the first time after assembling the machine, replacing components, or modifying parameter settings, exercise the greater care by, for example, reducing the torque limit value, error detection level, or operating speed or by operating the machine in such a way that an emergency stop can be made quickly.

SAFETY PRECAUTIONS

This "Safety Precautions" section describes the precautions which must be observed to ensure safety when using FANUC servo amplifiers (including spindle amplifiers). Users of any control motor amplifier model are requested to read the "Safety Precautions" carefully before first using the amplifier. Users should also read the relevant description in this manual to become fully familiar with the functions of the servo amplifier.
The users are basically forbidden to do any behavior or action not mentioned in the "Safety Precautions." They are invited to ask FANUC previously about what behavior or action is prohibited.

Contents

DEFINITION OF WARNING, CAUTION, AND NOTE s-2
WARNINGS AND CAUTIONS RELATING TO MOUNTING s-3
Warning.....s-3
Caution.....s-5
Note.....s-7
WARNINGS AND CAUTIONS RELATING TO A PILOT RUN ..s-8
Warning.....s-8
Caution.....s-9
WARNINGS AND CAUTIONS RELATING TO MAINTENANCE s-10
Warning.....s-10
Caution.....s-12
Note.....s-13

DEFINITION OF WARNING, CAUTION, AND NOTE

This manual includes safety precautions for protecting the user and preventing damage to the machine. Precautions are classified into Warning and Caution according to their bearing on safety. Also, supplementary information is described as a Note. Read the Warning, Caution, and Note thoroughly before attempting to use the machine.

> ⚠ **WARNING**
> Applied when there is a danger of the user being injured or when there is a danger of both the user being injured and the equipment being damaged if the approved procedure is not observed.

> ⚠ **CAUTION**
> Applied when there is a danger of the equipment being damaged, if the approved procedure is not observed.

> **NOTE**
> The Note is used to indicate supplementary information other than Warning and Caution.

- Read this manual carefully, and store it in a safe place.

WARNINGS AND CAUTIONS RELATING TO MOUNTING

Warning

⚠ WARNING

- **Check the specification code of the amplifier.**
  Check that the delivered amplifier is as originally ordered.

- **Mount a ground fault interrupter.**
  To guard against fire and electric shock, fit the factory power supply or machine with a ground fault interrupter (designed for use with an inverter).

- **Securely ground the amplifier.**
  Securely connect the ground terminal and metal frame of the amplifier and motor to a common ground plate of the power magnetic cabinet.

- **Be aware of the weight of the amplifier and other components.**
  Control motor amplifiers and AC reactors are heavy. When transporting them or mounting them in the cabinet, therefore, be careful not to injured yourself or damage the equipment. Be particularly carefull not to jam your fingers between the cabinet and amplifier.

- **Never ground or short-circuit either the power supply lines or power lines.**
  Protect the lines from any stress such as bending. Handle the ends appropriately.

- **Ensure that the power supply lines, power lines, and signal lines are securely connected.**
  A loose screw, loose connection, or the like will cause a motor malfunction or overheating, or a ground fault.
  Be extremely careful with power supply lines, motor power lines, and DC link connections through which a large amount of current passes, because a loose screw (or poor contact in a connector or poor connection between a connector terminal and a cable) may cause a fire.

- **Insulate all exposed parts that are charged.**

- **Never touch the regenerative discharge resistor or radiator directly.**
  The surface of the radiator and regenerative discharge unit become extremely hot. Never touch them directly. An appropriate structure should also be considered.

⚠ WARNING

- **Close the amplifier cover after completing the wiring.**
  Leaving the cover open presents a danger of electric shock.

- **Confirm that the input voltage meets the specifications of the amplifier before making connection.**
  If the input voltage exceeds the specified value (for example, if the input voltage for a 200-V input amplifier is 400 V), an internal component may be damaged and burnt out.

- **Prevent conductive, flammable, or corrosive foreign matters, mists, or water droplets from entering the unit**
  If conductive or flammable foreign matters enter the unit, explosion or corruption may be caused.
  If corrosive or conductive mists or water droplets are attached to an electronic circuit, unexpected operation may be caused in the circuit.
  The electronic circuit portion must be installed in an environment of pollution level 2 specified by IEC60664-1. To achieve pollution level 2 in a severe machine tool environment, it is generally necessary to install the portion in a cabinet that satisfies IP54.

Caution

⚠ CAUTION

- **Do not step or sit on the amplifier.**
  Also, do not stack unpacked amplifiers on top of each other.

- **Use the amplifier in an appropriate environment.**
  See the allowable ambient temperatures and other requirements, given in the corresponding descriptions.

- **Protect the amplifier from impact.**
  Do not place anything on the amplifier.

- **Do not disassemble the amplifier.**

- **Do not block the air inlet to the radiator.**

- **Take appropriate measures to prevent coolant, oil mist, or chips from being adhered to the radiator and fan motors that are exposed to the outside of the power magnetics cabinet.**
  A deposit of coolant, oil mist, or chips on the air inlet will result in a reduction in the cooling efficiency. In some cases, the required efficiency cannot be achieved. The deposit may also lead to a reduction in the useful life of the fan motors or semiconductors. Especially, when outside air is drawn in, mount filters on both the air inlet and outlet. These filters must be replaced regularly.
  So, an easy-to-replace type of filter should be used.

- **Connect the power supply lines and power lines to the appropriate terminals and connectors.**

- **Connect the signal lines to the appropriate connectors.**

- **Ensure that the cables used for the power supply lines and power lines are of the appropriate diameter and temperature ratings.**

- **Do not apply an excessively large force to plastic parts.**
  If a plastic section breaks, it may cause internal damage, thus interfering with normal operation. The edge of a broken section is likely to be sharp and, therefore, presents a risk of injury.

- **Before connecting the power supply wiring, check the supply voltage.**
  Check that the supply voltage is within the range specified in this manual, then connect the power supply lines.

- **Ensure that the combination of motor and amplifier is appropriate.**

⚠ CAUTION

- **Ensure that valid parameters are specified.**
  Specifying an invalid parameter for the combination of motor and amplifier may not only prevent normal operation of the motor but also result in damage to the amplifier.

- **Ensure that the amplifier and peripheral equipment are securely connected.**
  Check that the magnetic contactor, circuit breaker, and other devices mounted outside the amplifier are securely connected to each other and that those devices are securely connected to the amplifier.

- **Check that the amplifier is securely mounted in the power magnetic cabinet.**
  If any clearance is left between the power magnetic cabinet and the surface on which the amplifier is mounted, dust entering the gap may build up and prevent the normal operation of the amplifier.

- **Apply appropriate countermeasures against noise.**
  Adequate countermeasures against noise are required to maintain normal operation of the amplifier. For example, signal lines must be routed away from power supply lines and power lines.

Note

NOTE

- **Keep the nameplate clearly visible.**
- **Keep the legend on the nameplate clearly visible.**
- **After unpacking the amplifier, carefully check for any damage.**
- **Mount the amplifier in a location where it can be easily accessed periodic inspection and daily maintenance.**
- **Leave sufficient space around the machine to enable maintenance to be performed easily.**
  Do not place any heavy objects such that they would interfere with the opening of the doors.
- **Keep the parameter table and spare parts at hand.**
  Also, keep the specifications at hand. These items must be stored in a location where they can be retrieved immediately.
- **Provide adequate shielding.**
  A cable to be shielded must be securely connected to the ground plate, using a cable clamp or the like.

WARNINGS AND CAUTIONS RELATING TO A PILOT RUN

Warning

⚠ WARNING

- **Before turning on the power, check that the cables connected to the power magnetic cabinet and amplifier, as well as the power lines and power supply lines, are securely connected. Also, check that no lines are slack.**

- **Before turning on the power, ensure that the power magnetic cabinet is securely grounded.**

- **Before turning on the power, check that the door of the power magnetic cabinet and all other doors are closed.**
  Ensure that the door of the power magnetic cabinet containing the amplifier, and all other doors, are securely closed. During operation, all doors must be closed and locked.

- **Apply extreme caution if the door of the power magnetic cabinet or another door must be opened.**
  Only a person trained in the maintenance of the corresponding machine or equipment should open the door, and only after shutting off the power supply to the power magnetic cabinet (by opening both the input circuit breaker of the power magnetic cabinet and the factory switch used to supply power to the cabinet). If the machine must be operated with the door open to enable adjustment or for some other purpose, the operator must keep his or her hands and tools well away from any dangerous voltages. Such work must be done only by a person trained in the maintenance of the machine or equipment.

- **When operating the machine for the first time, check that the machine operates as instructed.**
  To check whether the machine operates as instructed, first specify a small value for the motor, then increase the value gradually. If the motor operates abnormally, perform an emergency stop immediately.

- **After turning on the power, check the operation of the emergency stop circuit.**
  Press the emergency stop button to check that the motor stops immediately, and that the power being supplied to the amplifier is shut off by the magnetic contactor.

- **Before opening a door or protective cover of a machine to enable adjustment of the machine, first place the machine in the emergency stop state and check that the motor has stopped.**

Caution

⚠ CAUTION

- **Note whether an alarm status relative to the amplifier is displayed at power-up or during operation.**
  If an alarm is displayed, take appropriate action as explained in the maintenance manual. If the work to be done requires that the door of the power magnetic cabinet be left open, the work must be carried out by a person trained in the maintenance of the machine or equipment. Note that if some alarms are forcibly reset to enable operation to continue, the amplifier may be damaged. Take appropriate action according to the contents of the alarm.

- **Before operating the motor for the first time, mount and adjust the position and speed sensors.**
  Following the instructions given in the maintenance manual, adjust the position and speed sensors for the spindle so that an appropriate waveform is obtained.
  If the sensors are not properly adjusted, the motor may not rotate normally or the spindle may fail to stop as desired.

- **If the motor makes any abnormal noise or vibration while operating, stop it immediately.**
  Note that if operation is continued in spite of there being some abnormal noise or vibration, the amplifier may be damaged. Take appropriate corrective action, then resume operation.

- **Observe the ambient temperature and output rating requirements.**
  The continuous output rating or continuous operation period of some amplifiers may fall as the ambient temperature increases. If the amplifier is used continuously with an excessive load applied, the amplifier may be damaged.

WARNINGS AND CAUTIONS RELATING TO MAINTENANCE

Warning

⚠ WARNING

- **Read the maintenance manual carefully and ensure that you are totally familiar with its contents.**
  The maintenance manual describes daily maintenance and the procedures to be followed in the event of an alarm being issued. The operator must be familiar with these descriptions.

- **Notes on replacing a fuse or circuit board**
  1) Before starting the replacement work, ensure that the circuit breaker protecting the power magnetic cabinet is open.
  2) Check that the red LED that indicates that charging is in progress is not lit.
     The position of the charging LED on each model of amplifier is given in this manual. While the LED is lit, hazardous voltages are present inside the unit, and thus there is a danger of electric shock.
  3) Some circuit board components become extremely hot. Be careful not to touch these components.
  4) Ensure that a fuse having an appropriate rating is used.
  5) Check the specification code of a circuit board to be replaced. If a modification drawing number is indicated, contact FANUC before replacing the circuit board.
     Also, before and after replacing a circuit board, check its pin settings.
  6) After replacing the fuse, ensure that the screws are firmly tightened. For a socket-type fuse, ensure that the fuse is inserted correctly.
  7) After replacing the circuit board, ensure that it is securely connected.
  8) Ensure that all power lines, power supply lines, and connectors are securely connected.

- **Take care not to lose any screws.**
  When removing the case or circuit board, take care not to lose any screws. If a screw is lost inside the nit and the power is turned on, the machine may be damaged.

⚠ WARNING

- **Notes on replacing the battery of the absolute Pulsecoder**
  Replace the battery only while the power is on. If the battery is replaced while the power is turned off, the stored absolute positioning data will be lost. Some αi series servo amplifier modules have batteries in their servo amplifiers. To replace the battery of any of those models, observe the following procedure: Open the door of the power magnetic cabinet; Leave the control power of the power supply module on; Place the machine in the emergency stop state so that the power being input to the amplifier is shut off; Then, replace the battery. Replacement work should be done only by a person who is trained in the related maintenance and safety requirements. The power magnetic cabinet in which the servo amplifier is mounted has a high-voltage section. This section presents a severe risk of electric shock.

- **Check the number of any alarm.**
  If the machine stops upon an alarm being issued, check the alarm number. Some alarms indicate that a component must be replaced. If the power is reconnected without first replacing the failed component, another component may be damaged, making it difficult to locate the original cause of the alarm.

- **Before resetting an alarm, ensure that the original cause of the alarm has been removed.**

- **Contact FANUC whenever a question relating to maintenance arises.**

Caution

⚠ CAUTION

- **Ensure that all required components are mounted.**
  When replacing a component or circuit board, check that all components, including the snubber capacitor, are correctly mounted. If the snubber capacitor is not mounted, for example, the IPM will be damaged.

- **Tighten all screws firmly.**

- **Check the specification code of the fuse, circuit board, and other components.**
  When replacing a fuse or circuit board, first check the specification code of the fuse or circuit board, then mount it in the correct position. The machine will not operate normally if a fuse or circuit board having other than the correct specification code is mounted, or if a fuse or circuit board is mounted in the wrong position.

- **Mount the correct cover.**
  The cover on the front of the amplifier carries a label indicating a specification code. When mounting a previously removed front cover, take care to mount it on the unit from which it was removed.

- **Notes on cleaning the heat sink and fan**
  1) A dirty heat sink or fan results in reduced semiconductor cooling efficiency, which degrades reliability. Periodic cleaning is necessary.
  2) Using compressed air for cleaning scatters the dust. A deposit of conductive dust on the amplifier or peripheral equipment will result in a failure.
  3) To clean the heat sink, do so only after turning the power off and ensuring that the heat sink has cooled to room temperature. The heat sink becomes extremely hot, such that touching it during operation or immediately after power-off is likely to cause a burn. Be extremely careful when touching the heat sink.

- **Notes on removing the amplifier**
  Before removing the amplifier, first ensure that the power is shut off. Be careful not to jam your fingers between the power magnetic cabinet and amplifier.

- **Unless otherwise specified, do not insert or remove any connector while the power is turned on. Otherwise, the amplifier may fail.**

Note

NOTE

- **Ensure that the battery connector is correctly inserted.**
  If the power is shut off while the battery connector is not connected correctly, the absolute position data for the machine will be lost.

- **Store the manuals in a safe place.**
  The manuals should be stored in a location where they can be accessed immediately it so required during maintenance work.

- **Notes on contacting FANUC**
  Inform FANUC of the details of an alarm and the specification code of the amplifier so that any components required for maintenance can be quickly secured, and any other necessary action can be taken without delay.

TABLE OF CONTENTS

SAFETY PRECAUTIONS s-1

DEFINITION OF WARNING, CAUTION, AND NOTE s-2
WARNINGS AND CAUTIONS RELATING TO MOUNTING s-3
Warning s-3
Caution s-5
Note s-7
WARNINGS AND CAUTIONS RELATING TO A PILOT RUN s-8
Warning s-8
Caution s-9
WARNINGS AND CAUTIONS RELATING TO MAINTENANCE s-10
Warning s-10
Caution s-12
Note s-13

1 CONFIGURATION 1

1.1 FEATURES OF THE SERVO AMPLIFIER αi SERIES 2
1.2 CONFIGURATION 3
1.2.1 200-V Input Series 3
1.2.2 400-V Input Series 6
1.3 SERVO AMPLIFIERS 8
1.4 LINEUP 10

2 SPECIFICATIONS 11

2.1 INPUT POWER 12
2.2 ENVIRONMENTAL CONDITIONS 25
2.3 SPECIFICATIONS OF THE MODULES 33
2.3.1 αi PS series 33
2.3.2 αi SV series 37
2.3.3 αi SP series 40
2.4 WEIGHT 43

3 ORDERING INFORMATION 45

3.1 SERVO AMPLIFIER 46
3.1.1 200-V Input Series 46
3.1.1.1 αi PS series 46
3.1.1.2 αi PS_R series 46
3.1.1.3 αi SV series 47
3.1.1.4 αi SP series 49
3.1.2 400-V Input Series 50
3.1.2.1 αi PS series 50
3.1.2.2 αi SV series 51
3.1.2.3 αi SP series 53
3.1.3 Others 54
3.1.3.1 AC reactor 54
3.1.3.2 AC line filter 56
3.1.3.3 Sub module SW 57

3.1.3.4 Sub module SM 57
3.1.3.5 Connectors 58
3.1.3.6 Fuses 64
3.1.3.7 Power transformer 65
3.1.3.8 Regenerative discharge unit 69
3.1.3.9 Cables 70
3.1.3.10 Circuit breaker and magnetic contactor 71
3.1.3.11 Lightning surge protector 74
3.1.3.12 Noise filter 75
3.1.3.13 Sensors for servo 75
3.1.3.14 Sensors for spindle 76
3.1.3.15 Power line switch unit 77
3.1.3.16 Battery for absolute Pulsecoder 78

4 HOW TO SELECT THE MODULE 79
4.1 HOW TO SELECT THE αi SV SERIES (SERVO AMPLIFIER) 80
4.1.1 200-V Input Series 81
4.1.2 400-V Input Series 82
4.1.3 How to Select the Dynamic Brake Module (DBM) 83
4.2 HOW TO SELECT THE αi SP series(SPINDLE AMPLIFIER) 84
4.2.1 200-V Input Series 85
4.2.2 400-V Input Series 85
4.3 HOW TO SELECT THE αi PS series (POWER SUPPLY) 86
4.3.1 How to Obtain the αi PS series rated output capability 87
4.3.2 How to Obtain the αi PS series maximum output capability 87
4.3.3 How to Obtain the αi PS series peak maximum output capability 88
4.3.4 Number of Connected αi SV series and αi SP Series 89
4.3.5 Notes on 400-V Input αi PS series selection 89
4.4 HOW TO SELECT THE αi PSR series (POWER SUPPLY, RESISTANCE DISCHARGE TYPE) 90
4.4.1 How to Obtain the αi PS_R series Rated Output Capability 91
4.4.2 How to Obtain the αi PS_R series Maximum Output Capability 91
4.4.3 Number of Connected αi SV series and αi SP series 92
4.4.4 Selecting a Regenerative Discharge Unit 93
4.5 LIST OF MOTOR OUTPUT CAPACITIES FOR αi PS AND αi PSR series SELECTION 96
4.5.1 Servo Motor Continuous Rated Outputs and Maximum Outputs at Acceleration 96
4.5.2 Spindle Motor Continuous Rated Outputs and Maximum Outputs at Acceleration 100

5 INSTALLATION 102
5.1 LEAKAGE CURRENT 103
5.2 GROUND 104
5.2.1 Ground Systems 104
5.2.2 Grounding Method 105
5.2.3 Notes on Connecting 107
5.3 NOISE PREVENTION 108
5.3.1 Separation of Signal Lines 108
5.3.2 Cable Clamp and Shield Processing 109
5.3.3 Cabinet 113
5.3.4 Others 116

5.4 AMPLIFIER INSTALLATION 117
5.5 AMPLIFIER INSTALLATION NOTES RELATING TO SAFETY STANDARDS 118
5.5.1 Requirements of EN and IEC Standards 118
5.5.1.1 Classification in standards on insulation design 118
5.5.1.2 Protection against electric shock 119
5.5.1.3 Protective grounding 121
5.5.1.4 EMC 121
5.5.1.5 Notes on the emergency stop circuit configuration 121
5.5.1.6 Reduction of load ratio to ambient temperature 122
5.5.1.7 Overload protection 122
5.5.1.8 External overload protection device 122
5.5.1.9 Over-speed protection 122
5.5.1.10 24-V power supply 122
5.5.1.11 Screw tightening torque 122
5.5.2 Requirements of UL Standards 123
5.5.2.1 Classification in standards on insulation design 123
5.5.2.2 Protection against electric shock 124
5.5.2.3 Protective grounding 124
5.5.2.4 Overload protection 124
5.5.2.5 External overload protection device 124
5.5.2.6 Short-circuit protection 125
5.5.2.7 Over-speed protection 125
5.5.2.8 24-V power supply 125
5.5.2.9 Screw tightening torque 125
5.6 NOTES ON COOLANT (REFERENCE) 126

6 HEAT DISSIPATION 127
6.1 200-V INPUT SERIES 128
6.1.1 αi PS series 128
6.1.2 αi SV series 129
6.1.3 αi SP series 133
6.2 400-V INPUT SERIES 134
6.2.1 αi PS series 134
6.2.2 αi SV series 135
6.2.3 αi SP series 139

7 COOLING 140

8 EXTERNAL DIMENSIONS AND MAINTENANCE AREA 141
8.1 OUTLINE DRAWINGS 142
8.1.1 Outline Drawings of Amplifiers, Panel Cut-out, and Maintenance Area 142
8.1.2 AC Reactor Unit 148
8.1.3 AC Line Filter 158
8.1.4 Power Transformer 159
8.1.5 Regenerative Discharge Unit 165
8.1.6 Dynamic Brake Module (DBM) 168
8.1.7 Circuit Breaker 170
8.1.8 Magnetic Contactors 172
8.1.9 Lightning Surge Protector 179
8.1.10 Noise Filter 182
8.2 PANEL CUT-OUT DIAGRAMS 185

9 CONNECTION 192

9.1 TOTAL CONNECTION DIAGRAM 193

9.2 CONNECTOR LOCATION 195

9.2.1 αi PS series 195

9.2.2 αi SV series 200

9.2.3 αi SP Series 203

9.3 CABLE CONNECTION DETAILS 207

9.3.1 αi PS Series Connection Diagram 207

9.3.1.1 Details of cable K1 (power supply line) 213

9.3.1.2 Details of short bar K2 220

9.3.1.3 Details of cable K3 225

9.3.1.4 Details of cable K69 226

9.3.1.5 Details of cable K6 227

9.3.1.6 Details of cable K7 228

9.3.1.7 Details of cable K70 230

9.3.1.8 Detailed description of the connection of cables K41 (for regenerative discharge resistance), K42 (for thermostat), and K43 (for fan motor) 231

9.3.1.9 Details of cable K100 (for power failure detection output) 233

9.3.2 αi SV series Connection Diagram 234

9.3.2.1 Details of cable K2 237

9.3.2.2 Details of cable K4 237

9.3.2.3 Details of cable K69 237

9.3.2.4 Details of cable K21 238

9.3.2.5 Details of cable K22 243

9.3.2.6 Details of cable K24 248

9.3.2.7 Details of cable K25 249

9.3.2.8 Details of cable K26 250

9.3.2.9 Details of cable K27 251

9.3.2.10 Connecting the battery (for the absolute Pulsecoder) 252

9.3.2.11 Details of cable K70 258

9.3.3 αi SP Series Connection Diagram 259

9.3.3.1 Details of cable K2 260

9.3.3.2 Details of cable K69 260

9.3.3.3 Details of cable K10 (power cable) 260

9.3.3.4 Details of cable K70 263

9.3.3.5 Details of cable K11 263

9.3.3.6 Details of cable K12 264

9.3.3.7 Details of cable K14 267

9.3.3.8 Details of cable K16 271

9.3.3.9 Details of cable K17 273

9.3.3.10 Details of cable K33 281

9.3.3.11 Details of cable K36 287

9.3.3.12 Details of cable K71 290

9.3.3.13 Details of cable K86 293

9.3.3.14 Details of cable K88 294

9.3.3.15 Details of cable K90 295

9.3.3.16 Details of cable K96 296

9.3.3.17 Details of cable K97 297

9.3.3.18 Spindle Motor Feedback Cable Connection 299

9.4 DETAILS OF CONNECTORS 301

9.4.1 20-Pin Half-Pitch Connectors 301

9.4.2 Tyco Electronics AMP D-5000 Series Connector 302

10 SPINDLE-RELATED OPTIONS 304

10.1 SPINDLE ORIENTATION 305

10.2 POWER LINE SWITCH CIRCUIT 306

10.2.1 Overview 306
10.2.2 Switch Circuit Configuration 306
10.2.3 Power Line Switch Unit 308
10.2.3.1 Specification 308
10.2.4 Outside and Mounting Dimension Diagrams 309
10.2.5 Connection 313
10.2.6 Notes 314

10.3 SUB MODULE SW 316

10.3.1 Configuration 316
10.3.2 Specification 317
10.3.3 External Dimensions 319
10.3.4 Connector Installation Diagram (for Combination with α*i* SP 15) 321
10.3.5 Connection 322

10.4 SUB MODULE SM 323

10.4.1 Specifications 324
10.4.2 Outline Drawing 325
10.4.3 Panel Cut-out 326
10.4.4 Connection 326

11 SENSOR 327

11.1 SENSOR FOR THE SERVO SYSTEM 328

11.1.1 Absolute α*i*CZ Sensor (Separate Sensor) 328
11.1.1.1 Specifications 329
11.1.1.2 Connection block diagram (common to three models) 335
11.1.1.3 Connection specifications 336
11.1.1.4 Rotation direction of the absolute α*i*CZ sensor 338
11.1.1.5 Installation 340
11.1.1.6 Notes on use 345
11.1.1.7 Output signal check method 348

11.2 SENSOR FOR THE SPINDLE 350

11.2.1 Position Coder 350
11.2.1.1 α*i* position coder 350
11.2.1.2 α position coder S 353
11.2.1.3 Installation conditions and notes 356
11.2.2 α*i*BZ Sensor (A860-2150-T*** and A860-2155-T***) 358
11.2.3 α*i*CZ Sensor (for the Spindle) 367
11.2.3.1 Names and specification numbers 368
11.2.3.2 Absolute maximum ratings 368
11.2.3.3 Specifications 368
11.2.3.4 System configuration and connection block diagram 380
11.2.3.5 Connection specifications 381
11.2.3.6 Rotation direction of the α*i*CZ sensor 384
11.2.3.7 Machine start-up procedure (outline) 385
11.2.3.8 Installation 386
11.2.3.9 Interpolation error learning 391
11.2.3.10 Notes 392
11.2.3.11 Maintenance target parts 393
11.2.3.12 Output signal check method 394
11.2.3.13 Spindle alarms 396

APPENDIX

A FITTING A LIGHTNING SURGE PROTECTION DEVICE 399
A.1 200-V INPUT SERIES POWER SUPPLY 400
A.2 400-V INPUT SERIES POWER SUPPLY 402
A.3 CAUTIONS 403

B CABLES 404
B.1 10-PAIR CABLE 405
B.2 COMPOSITE 7-CORE CABLE 407
B.3 COMPOSITE 10-CORE CABLE 415
B.4 COMPOSITE 12-CORE CABLE 417
B.5 COMPOSITE 16-CORE CABLE 419
B.6 10-PAIR CABLE 420

C EXTERNAL DIMENSIONS OF EACH CONNECTOR 421

D FEEDBACK CABLE LENGTH 431
D.1 SPINDLE CABLE LENGTH (WHEN RECOMMENDED CABLES ARE USED) 432
D.2 SERVO CABLE LENGTH (WHEN RECOMMENDED CABLES ARE USED) 433

E POWER LINE FOR SERVO MOTOR AND AMPLIFIER 434
E.1 SELECTING A POWER CABLE 435

F MEASURES AGAINST NOISE FROM SERVO AMPLIFIERS 438
F.1 NOISE OCCURRENCE IN SERVO AMPLIFIERS 439
F.2 NOISE TYPES 440
F.3 ANTI-NOISE MEASURES 442
F.3.1 Pre-Installation Arrangement 442
F.3.2 Anti-Noise Measures 443
F.3.3 Concrete Examples of Anti-Noise Measures 444
F.3.4 Anti-Noise Measures for Power Supply Equipment and Grounding 446
F.3.5 Anti-Noise Devices 449
F.4 MISCELLANEOUS 450

G EXAMPLES OF RECOMMENDED POWER MAGNETICS CABINETS FOR SERVO AMPLIFIER INSTALLATION 451
G.1 OVERVIEW 452
G.2 DESCRIPTIONS 453
G.2.1 Power Magnetics Cabinet Seal-up 453
G.2.2 Environments for Amplifier Heat Sink Sections 458
G.2.3 Environments for Amplifier Installation 460

H DC LINK TERMINAL BOARD SECTION PROTECTIVE COVER 462
H.1 OVERVIEW 463
H.2 HOW TO MOUNT 464

I POWER FAILURE DETECTION FUNCTION 465

I.1 OVERVIEW 466
I.2 POWER FAILURE DETECTION SPECIFICATION 467
I.3 APPLICATION TO PREVENTION OF VERTICAL AXES FROM FALLING AT POWER FAILURE 469
I.3.1 Procedure 469
I.3.2 Brake Circuit 470
I.3.3 Method for Keeping Vertical Axis Motors Energized 473
I.3.4 Cautions 476
I.3.5 Confirming Effect 477
I.3.6 Method for Supplying External Power to the Amplifier 479
I.4 USE IN COMBINATION WITH THE DUAL CHECK SAFETY FUNCTION 481

J SENSOR (OLD SPECIFICATIONS) 482

J.1 SENSOR FOR THE SYNCHRONOUS BUILT-IN SERVO MOTOR AND SEPARATE SENSOR 483
J.1.1 Absolute α*i*CZ Sensor (Serial Output, A860-2142-T***) 483
J.2 SENSOR FOR THE SPINDLE 498
J.2.1.1 α*i*BZ Sensor (Conventional Dimensions, A860-2120-T***) 498
J.2.2 α*i*CZ Sensor (Analog Output, A860-2140-T***) 503

K MAGNETIC SENSOR SIGNAL CONVERSION ADAPTER 515

K.1 ORDERING INFORMATION 516
K.2 SPECIFICATIONS 516
K.3 DIMENSIONS 517
K.4 CONNECTION 518
K.5 METHOD OF ADJUSTMENT 520

L HARMONIC LEAKAGE CURRENT 521

1 CONFIGURATION

Chapter 1, "CONFIGURATION", consists of the following sections:

1.1 FEATURES OF THE SERVO AMPLIFIER αi SERIES.....2
1.2 CONFIGURATION.....3
1.3 SERVO AMPLIFIERS 8
1.4 LINEUP 10

1.1 FEATURES OF THE SERVO AMPLIFIER αi SERIES

The servo amplifier αi series employs a modular structure, and is thinner, conserves more space, outputs less heat, and saves more energy.

Compact

(1) Use of a latest low-loss power device and a newly developed highly-efficient radiator makes it possible to reduce the depth of the fin to 100 mm, therefore reducing the depth of the amplifier.
(2) The width of the amplifier is reduced, and therefore the amplifier requires an average of approximately 30% smaller installation space in the cabinet than the conventional amplifiers.
(3) The shape of the cable connector is improved to reduce the length of cable projection into the control board.

Reduction in cabling

(1) Amplifiers can be connected with one cable.
(2) A ground connection from the motor output terminal block to the flange is included, so external cabling for this connection is no longer required. (A connection from the top of the flange to the system ground on the control board is required.)

Connector attachment to power lines

(1) Connectors are attached to input power lines and motor power lines. (For the large-capacity models, terminal blocks are used.) The time required for power line attachment to and detachment from the servo amplifier cabinet is substantially reduced.

Improved maintainability

(1) A fan motor can now be replaced in an instant manner, so that the time required to replace a fan motor is reduced substantially.
(2) Connectors are attached to input power lines and motor power lines, so that the time required for servo amplifier replacement is reduced substantially.
(3) The need to perform reference position return operation after servo amplifier replacement is eliminated.
The servo amplifier αi series has a built-in backup capacitor in the Absolute Pulsecoder as standard. The capacitor enables absolute position detection operation for about 10 minutes, so that reference position return operation after servo amplifier or feedback cable replacement is unnecessary.

1.2 CONFIGURATION

The FANUC αi series consists of the following units and parts:

1.2.1 200-V Input Series

(1) αi PS series (Power Supply).....(Basic)
(2) αi PS_R series (Power Supply) [resister discharge type]....(Basic)
(3) αi SV series (Servo Amplifier).....(Basic)
(4) αi SP series (Spindle Amplifier).....(Basic)
(5) AC reactor.....(Basic)
(6) Connectors (for connection cables) .....(Basic)
(7) Fuses .....(Basic)
(8) Power transformer .....(Optional)
(9) AC line filter.....(Basic)
(10) Regenerative discharge unit.....(Basic)
(11) DBM (Dynamic brake module).....(Basic)

Basic configuration using αi PS (example)

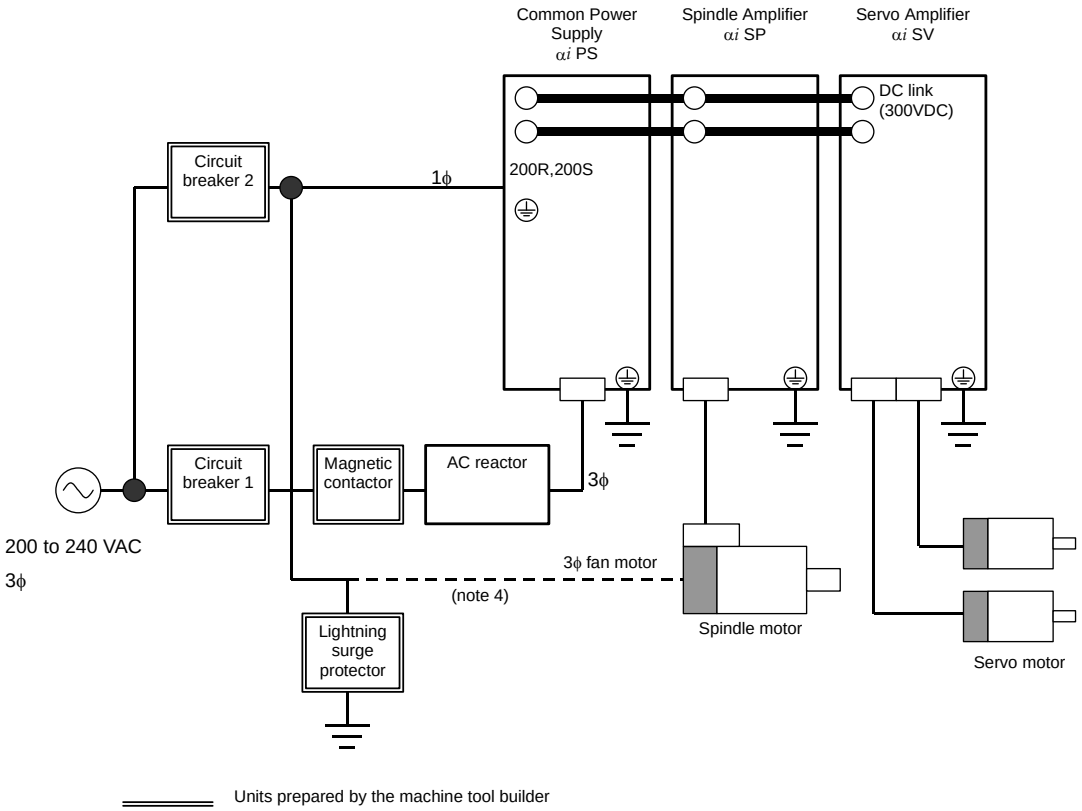

NOTE

1 For how to use the αi PS together with the αi SV and αi SP, see Chapter 4, "HOW TO SELECT THE MODULE".
2 A magnetic contactor, AC line filter, and circuit breakers are always required.
3 To protect the unit from surge currents caused by lightning, connect surge absorbers between lines, and between the lines and ground, at the power inlet of the power magnetic cabinet. See APPENDIX A for details.
4 When using the 3φ fan motor, breaker 2 can be shared.

Basic configuration using αi PS_R (example)

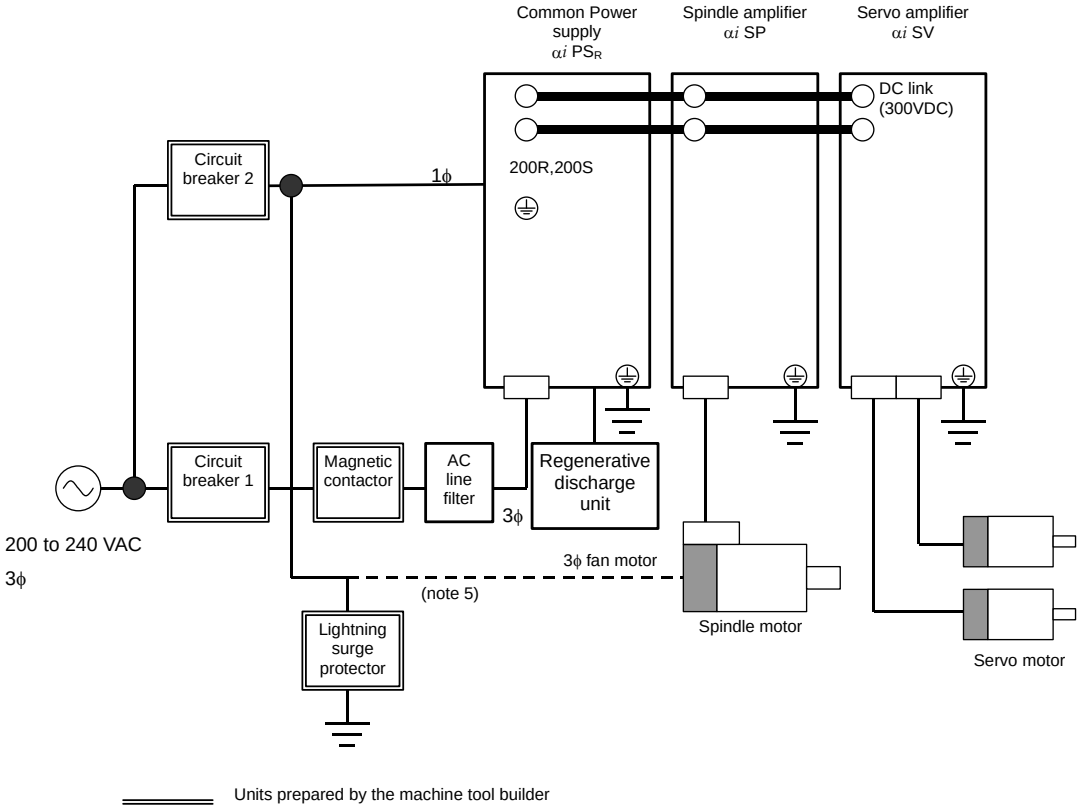

NOTE

1 For how to use the αi PS_R together with the αi SV and αi SP, see Chapter 4, "HOW TO SELECT THE MODULE".
2 A magnetic contactor, AC line filter, and circuit breakers are always required.
3 To protect the unit from surge currents caused by lightning, connect surge absorbers between lines, and between the lines and ground, at the power inlet of the power magnetic cabinet. See APPENDIX A for details.
4 When an insulating transformer is installed, high-frequency noise to the Power Supply is reduced, so the AC line filter is not required. If the insulating transformer is installed outside the power magnetic cabinet, and the cable connecting the amplifier is exposed, the cable must be covered with a grounded metal duct, or an AC line filter must be installed.
5 When using the 3ϕ fan motor, breaker 2 can be shared.

1.2.2 400-V Input Series

(1) αi PS series (Power Supply).....(Basic)
(2) αi SV series (Servo Amplifier).....(Basic)
(3) αi SP series (Spindle Amplifier).....(Basic)
(4) AC reactor.....(Basic)
(5) Connectors (for connection cables).....(Basic)
(6) Fuses .....(Basic)
(7) DBM (Dynamic brake module).....(Basic)

Basic configuration using αi PS (example)

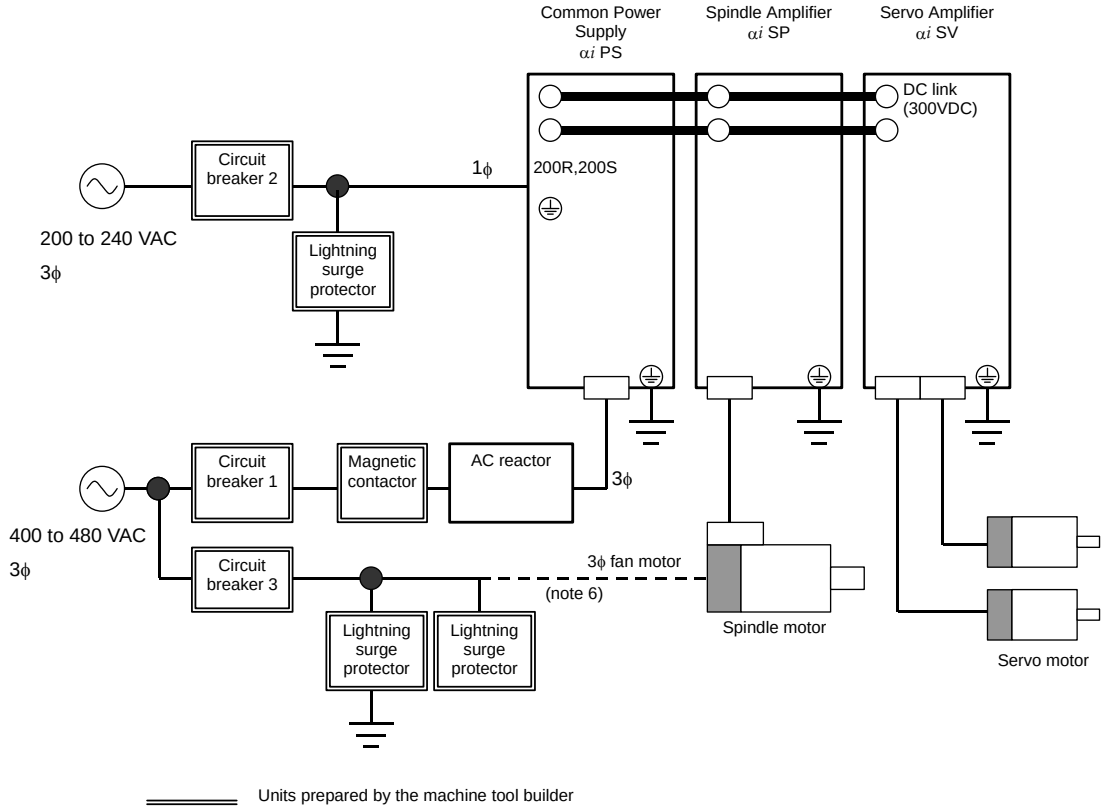

NOTE

1 For the control Power Supply, single–phase 200VAC is required.
2 For how to use the αi PS together with the αi SV and αi SP, see Chapter 4, "HOW TO SELECT THE MODULE".
3 A magnetic contactor, AC line filter, and circuit breakers are always required.
4 To protect the unit from surge currents caused by lightning, connect surge absorbers between lines, and between the lines and ground, at the power inlet of the power magnetic cabinet. See APPENDIX A for details.
5 Measures must be taken to detect the operation (trip) of circuit breaker 3.
6 When using the 3ϕ fan motor, breaker 2 can be shared.

1.3 SERVO AMPLIFIERS

αi PS series (Power Supply)

The αi PS series power supplies are used as a main power supply of motor power and as a common power supply to supply control power to servo amplifiers. Select an appropriate Power Supply according to the output levels of the servo motor and spindle motor used.

There are three types of αi PS series, as follows:

<1> 200-V input series

This Power Supply is designed to provide a main power supply of 200 to 240 V. The module uses power regeneration that returns energy to the power supply during motor deceleration (regeneration).

<2> 400-V input series

This Power Supply can be connected to a main power supply of 400 to 480V without a transformer. The module uses power regeneration that returns energy to the power supply during motor deceleration (regeneration). It is used together with a αi SV series and αi SP series of the 400-V input series.

<3> αi PS_R series

This Power Supply is designed to provide a main power supply of 200 to 240 V. The module uses resistance regeneration that allows energy to be consumed by resistance during motor deceleration (regeneration).

<4> Regenerative discharge unit

This unit is a resistance used to consume energy during motor deceleration (regeneration). This unit is required whenever the αi PS_R is used.

αi PS - x HV
(A) (B) (C)

(A) Model name: PS = Power Supply
PS_R= Power Supply (resister discharge type)
(B) Rated output: Numeric value representing a continuous rating in kW
(C) For a 400-V input series, "HV" is added.

αi SV series (Servo Amplifier)

The αi SV series amplifiers are used to drive a servo motor. Select an appropriate amplifier according to the servo motor connected.

There are two types of αi SV series, as follows:

<1> 200-V input series

This Amplifier drives a servo motor of the 200-V input series. Amplifiers for one axis, two axes, and three axes are available.

<2> 400-V input series

This Amplifier drives a servo motor of the 400-V input series. Amplifiers for one axis and two axes are available.

αi SV x / x / x HV L
(A) (B) (C) (D) (E)(F)

(A) Model name: SV = Servo amplifier
(B) L-axis maximum output current value [Apeak]
(C) M-axis maximum output current value [Apeak]
(D) N-axis maximum output current value [Apeak]
(E) For an amplifier supporting 400-V input, "HV" is added.
(F) For an amplifier supporting HRV4 control, "L" is added.

αi SP series (Spindle Amplifier)

The αi SV series amplifiers are used to drive a spindle motor. Select an appropriate amplifier according to the spindle motor connected.

There are two types of αi SP series, as follows:

<1> 200-V input series

This Amplifier drives a spindle motor of the 200-V input series.

<2> 400-V input series

This Amplifier drives a spindle motor of the 400V input series.

αi SP x HV
(A) (B) (C)

(A) Model name: SP = Spindle amplifier module
(B) Output: Numeric value representing the 30-minutes rating of a matching standard motor (αi) in kW
(C) For an amplifier supporting 400-V input, "HV" is added.

1.4 LINEUP

Size	Input power supply	αi PS	αi PS_R	αi SP	αi SV		
60mm-wide Without external fin	200V		3		4, 20	4/4, 4/20 20/20	4/4/4 20/20/20
	400V				10HV	10/10HV	
60mm-wide With external fin	200V	5.5	5.5	2.2, 5.5	40, 80 160, 20L 40L, 80L	20/40, 40/40 40/80, 80/80 20/20L 20/40L 40/40L	20/20/40
	400V			5.5HV	20HV 40HV 80HV 10HVL 20HVL 40HVL	20/20HV 10/10HVL	
90mm-wide With external fin	200V	11, 15		11, 15	160L	80/160 160/160 40/80L 80/80L	
	400V	11HV, 18HV		11HV, 15HV	80HVL	20/40HV 40/40HV 40/80HV 80/80HV 20/20HVL 20/40HVL 40/40HVL	
150mm-wide With external fin	200V	26, 30, 37		22, 26, 30, 37	360		
	400V	30HV, 45HV		30HV, 45HV	180HV		
300mm-wide With external fin	200V	55		45, 55			
	400V	75HV, 100HV		75HV, 100HV	360HV		

2 SPECIFICATIONS

Chapter 2, "SPECIFICATIONS", consists of the following sections:

2.1 INPUT POWER 12
2.2 ENVIRONMENTAL CONDITIONS 25
2.3 SPECIFICATIONS OF THE MODULES 33
2.4 WEIGHT 43

2.1 INPUT POWER

Power supply of 200-V input series

(1) Power specification

Item	Specification
Main power supply voltage	Three-phase 200 VAC to 240 VAC
Power supply voltage for the control	Single-phase 200 VAC to 240 VAC (input from connector CX1A)
Allowable voltage deviation	-15% to +10% (including voltage variation due to load)
Instantaneous power failure guarantee time	3ms
Power frequency	50/60Hz, ±1Hz
Power supply unbalance	±5% of the rated voltage or less
Power supply impedance (Note)	The voltage variation must be within ±7% when a maximum output is produced for voltage at non-load time (power running and regeneration).

NOTE
When the power supply impedance is high, and the voltage variation exceeds the specified values, an alarm (DC link undervoltage alarm or DC link overvoltage alarm) can be issued in αi PS, or the output of the motor can decrease.

[Method of checking power supply impedance]

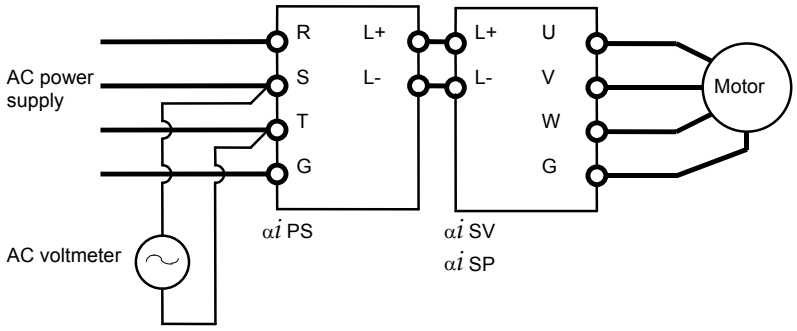

$$\frac{E0 - E1}{E0} \times 100(\%) < 7(\%)$$

E0 : Voltage at non-load time
E1 : Voltage at maximum output time (power running and regeneration)

(2) The power supply for αi PS control (power supply input of CX1A) must be turned on before or at the same time when the CNC is turned on. For the timing of power-on at the same time when the CNC is turned on, refer to the chapter of the power supply in the hardware connection manual of the CNC used.

(3) It is recommended that a capacitor unit for power-factor improvement not be installed. This is because the capacitor unit for power-factor improvement may adversely affect power regeneration.
(4) The rated output of the motor is guaranteed for the rated input voltage. If the input voltage changes, the rated output may not appear even when the input voltage change is within the allowable range.
(5) When the power supply is used in an area where the input voltage is not within the range of 200 to 240 VAC, a power transformer is required. When a power transformer is to be provided by the user, the power must satisfy the specifications listed below.

αiPS

	αiPS 5.5	**αiPS 11**	**αiPS 15**	**αiPS 26**	**αiPS 30**	**αiPS 37**	**αiPS 55 (45kW output)**	**αiPS 55 (55kW output)**
Rated capacity (kVA)	9	17	22	37	44	53	64	79
Secondary current (A)	26	49	63	106	127	153	185	228
Secondary output voltage	200 to 240V							
Secondary voltage regulation	5%							
Secondary voltage deviation	±3%							

αiPS$_R$

	αiPS$_R$ 3 (2kW output)	**αiPS$_R$ 3 (3kW output)**	**αiPS$_R$ 5.5 (5.5kW output)**	**αiPS$_R$ 5.5 (7.5kW output)**
Rated capacity (kVA)	3.5	5	9	12
Secondary current (A)	10	14.5	26	35
Secondary output voltage	200 to 240V			
Secondary voltage regulation	5%			
Secondary voltage deviation	±3%			

* The secondary current indicates the current value observed when the secondary output voltage is 200 V.

(6) Ground
The main circuit and 200V control power supply must be grounded through the neutral point or one phase of the three-phase power supply.

(7) Noise filter
To satisfy the EMC regulation enforced in the EU countries, a noise filter must be installed in the power supply input section.

Power supply of 400-V input series

(1) Power specification

Item	Specification
Main power supply voltage	Three-phase 400 VAC to 480 VAC Star connection, neutral grounding (For details, see Items (5) and (6).) 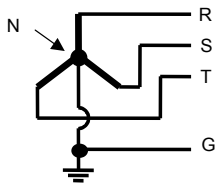
Power supply voltage for the control	Single-phase 200 VAC to 240 VAC (input from connector CX1A) (For details, see Item (7).)
Allowable voltage deviation	-15% to +10% (including voltage variation due to load)
Instantaneous power failure guarantee time	3ms
Power frequency	50/60Hz, ±1Hz
Power supply unbalance	±5% of the rated voltage or less
Power supply impedance (Note)	The voltage variation must be within ±7% when a maximum output is produced for voltage at non-load time (power running and regeneration).

NOTE
When the power supply impedance is high, and the voltage variation exceeds the specified values, alarm (DC link undervoltage alarm or DC link overvoltage alarm) can be issued in αi PS, or the output of the motor can decrease.

[Method of checking power supply impedance]

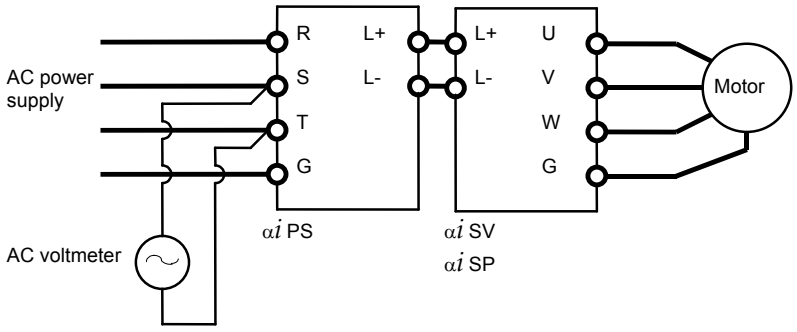

$$\frac{E0 - E1}{E0} \times 100(\%) < 7(\%)$$

E0 : Voltage at non-load time

E1 : Voltage at maximum output time (power running and regeneration)

(2) The power supply for αi PS control (power supply input of CX1A) must be turned on before or at the same time when the CNC is turned on. For the timing of power-on at the same time when the CNC is turned on, refer to the chapter of the power supply in the hardware connection manual of the CNC used.

(3) It is recommended that a capacitor unit for power-factor improvement not be installed. This is because the capacitor unit for power-factor improvement may adversely affect power regeneration.

(4) The rated output of the motor is guaranteed for the rated input voltage. If the input voltage changes, the rated output may not appear even when the input voltage change is within the allowable range.

(5) Power supply voltage for the main circuit

- The power specification of the main circuit for the 400-V input series of the αi series servo amplifier is as follows:
  <1> Star connection
  <2> Neutral grounding on the power supply side
  <3> A PE is provided on the power line. (The PE of the amplifier and motor is connected to the PE of the power line.)
  <4> The inter-phase voltage of the power supply is 400 VAC to 480 VAC (-15%, +10%).
- If the power supply does not satisfy the conditions above, the power supply needs to be converted to a power supply for neutral grounding by using a star connection and an isolating-transformer.
- The 400-V input series of the αi series servo amplifier is designed in compliance with the safety standard EN50178 to implement insulation design of the pattern and components of the printed circuit board by ensuring that the phase voltage of the power supply and the voltage between grounds connected to the neutral point of the star connection are AC 300 Vrms or below.
  Accordingly, if the power supply does not satisfy the conditions above, the pattern and components of the printed circuit board are poorly insulated. This can cause very dangerous states including a failure in servo amplifier operation and the occurrence of a high voltage at exposed areas.

(6) Example of connecting the Power supply of the main circuit

No.	Power system	Power specification	Power supply of amplifier
1	TN-power system	• Star connection • Neutral grounding on the power supply side • PE provided on the power line • Power supply voltage specification 400 VAC to 480 VAC (-15%,+10%)	• Directly connectable to the power supply (No transformer is required.)
2	TN-power system	• Star connection • Neutral grounding on the power supply side • PE provided on the power line • Power supply voltage specification Not within the range 400 VAC to 480 VAC (-15%, +10%)	[When the power supply voltage is lower than the specified power supply voltage] The power supply voltage is increased with an auto-transformer. [When the power supply voltage is higher than the specified power supply voltage] The power supply voltage is decreased with an auto-transformer. Before starting to use the power supply, check that it conforms to the relevant safety standards.
3	TN-power system	• Delta connection • Single-phase grounding on the power supply side • PE provided on the power line	• An isolating-transformer is used. • A star connection is made on the secondary side of an isolating-transformer, and the neutral point is grounded.
4	TT-power system	• Star connection • Neutral grounding on the power supply side • No PE provided on the power line	
5	TT-power system	• Delta connection • Single-phase grounding on the power supply side • No PE provided on the power line	
6	IT-power system	• Star connection • No direct ground connection made on the power supply side • No PE provided on the power line	
7	IT-power system	• Delta connection • No direct ground connection made on the power supply side • No PE provided on the power line	• An isolating-transformer is used. • A star connection is made on the secondary side of an isolating-transformer, and the neutral point is grounded.

* The TN-power system, TT-power system, and IT-power system are based on the DC power distribution system standard IEC60364.

(a) TN-power system

No.	Power system	Power specification	Power supply of amplifier
1	TN-power system	• Star connection • Neutral grounding on the power supply side • PE provided on the power line • Power supply voltage specification 400 VAC to 480 VAC (-15%,+10%)	• Directly connectable to the power supply (No transformer is required.)

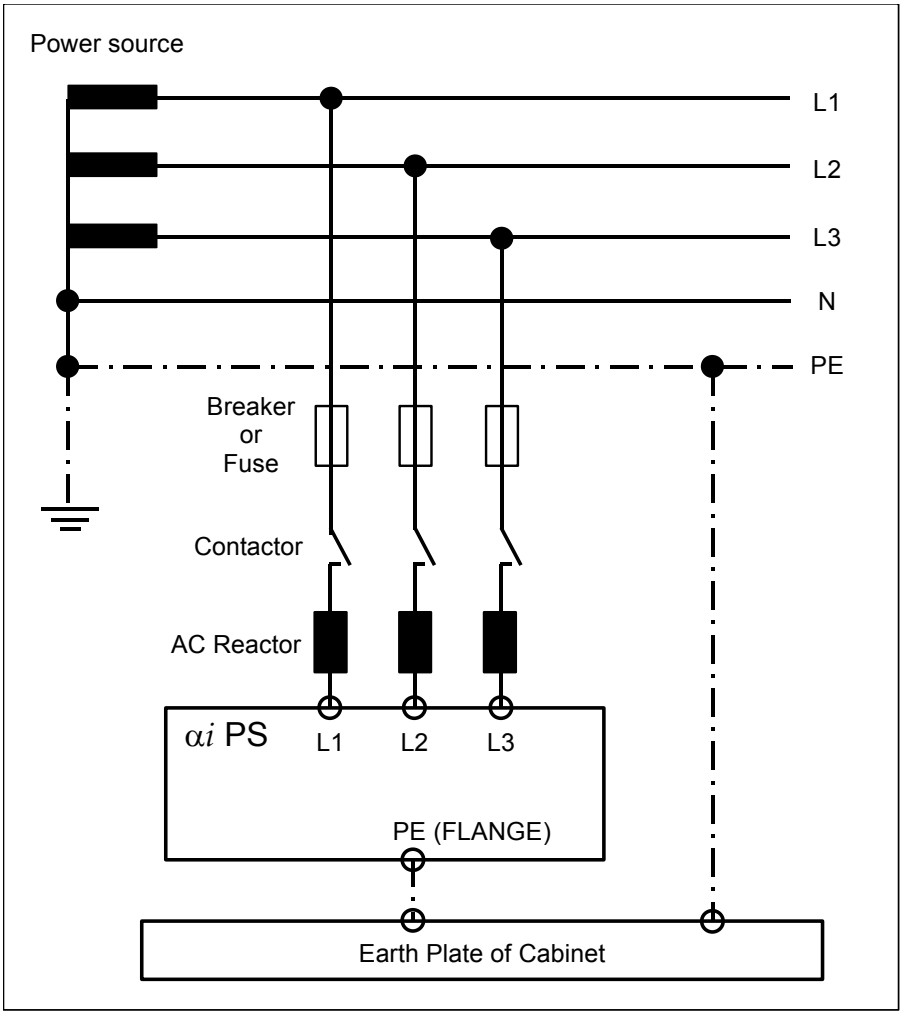

(b) TN-power system

No.	Power system	Power specification	Power supply of amplifier
2	TN-power system	• Star connection • Neutral grounding on the power supply side • PE provided on the power line • Power supply voltage specification Not within the range 400 VAC to 480 VAC (-15%, +10%)	[When the power supply voltage is lower than the specified power supply voltage] The power supply voltage is increased with an auto-transformer. [When the power supply voltage is higher than the specified power supply voltage] The power supply voltage is decreased with an auto-transformer. Before starting to use the power supply, check that it conforms to the relevant safety standards.

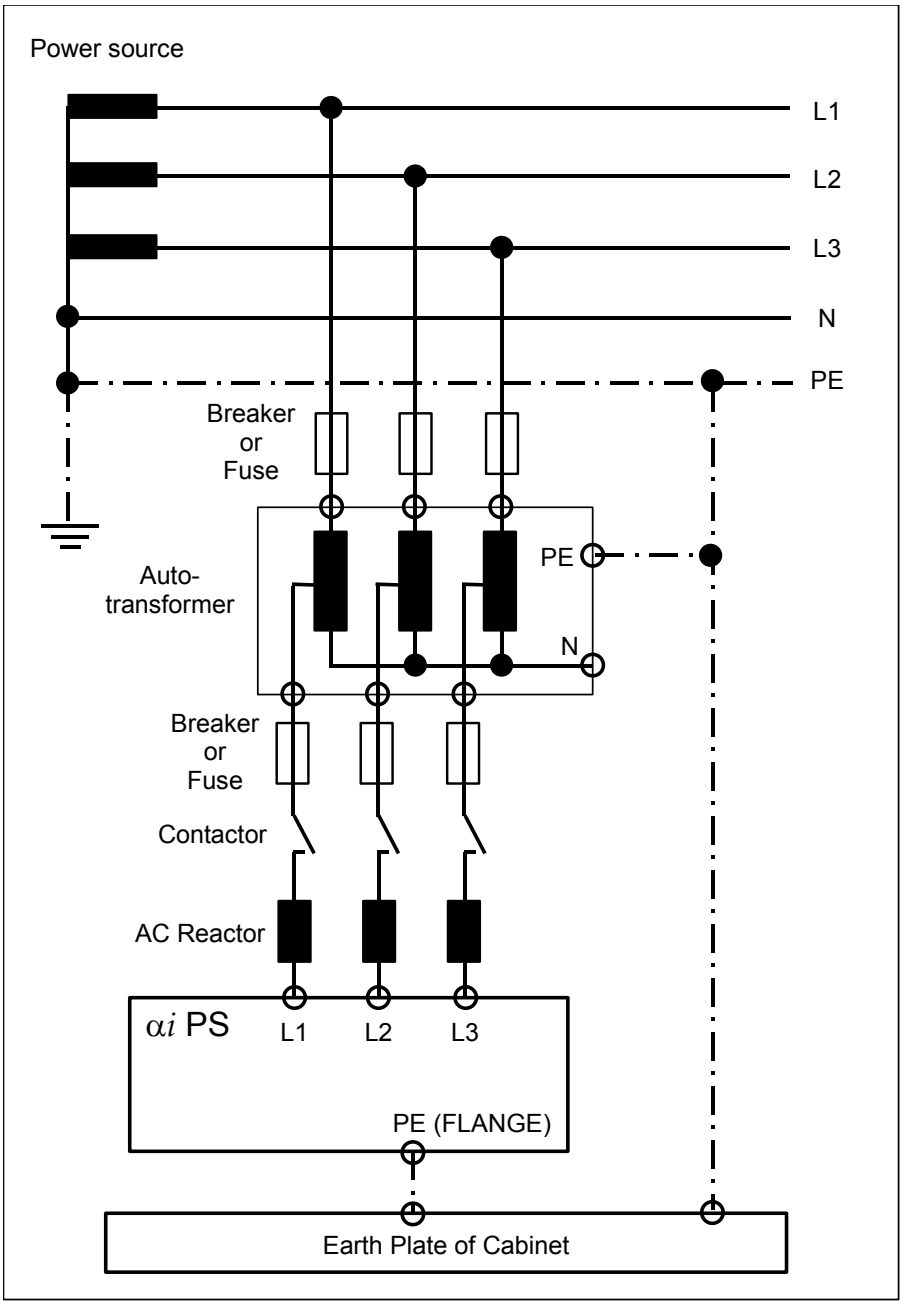

(c) TN-power system

No.	Power system	Power specification	Power supply of amplifier
3	TN-power system	• Delta connection • Single-phase grounding on the Power supply side • PE provided on the power line	• An isolating-transformer is used. • A star connection is made on the secondary side of an isolating-transformer, and the neutral point is grounded.

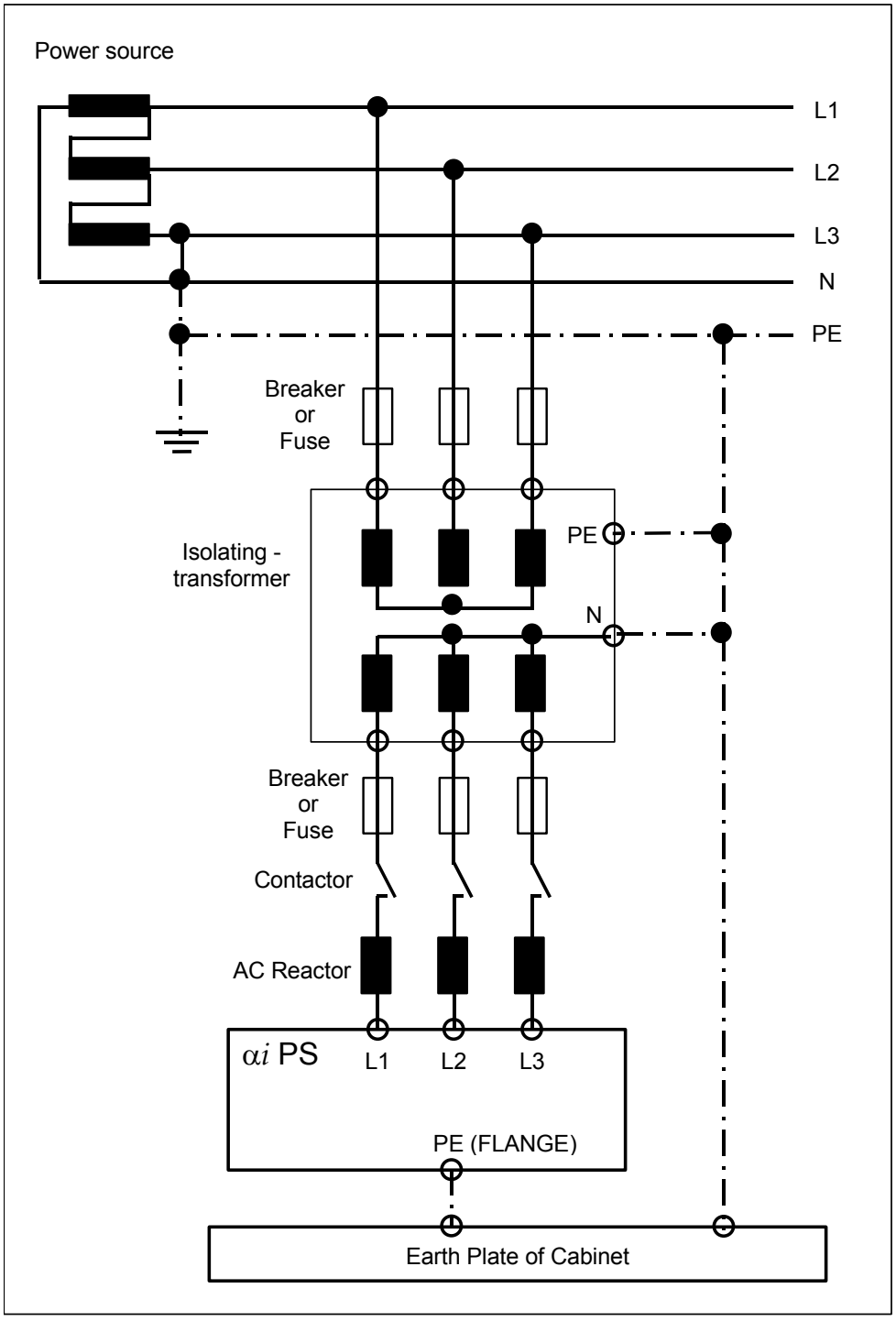

(d) TT-power system

No.	Power system	Power specification	Power supply of amplifier
4	TT-power system	• Star connection • Neutral grounding on the power supply side • No PE provided on the power line	• An isolating-transformer is used. • A star connection is made on the secondary side of an isolating-transformer, and the neutral point is grounded.

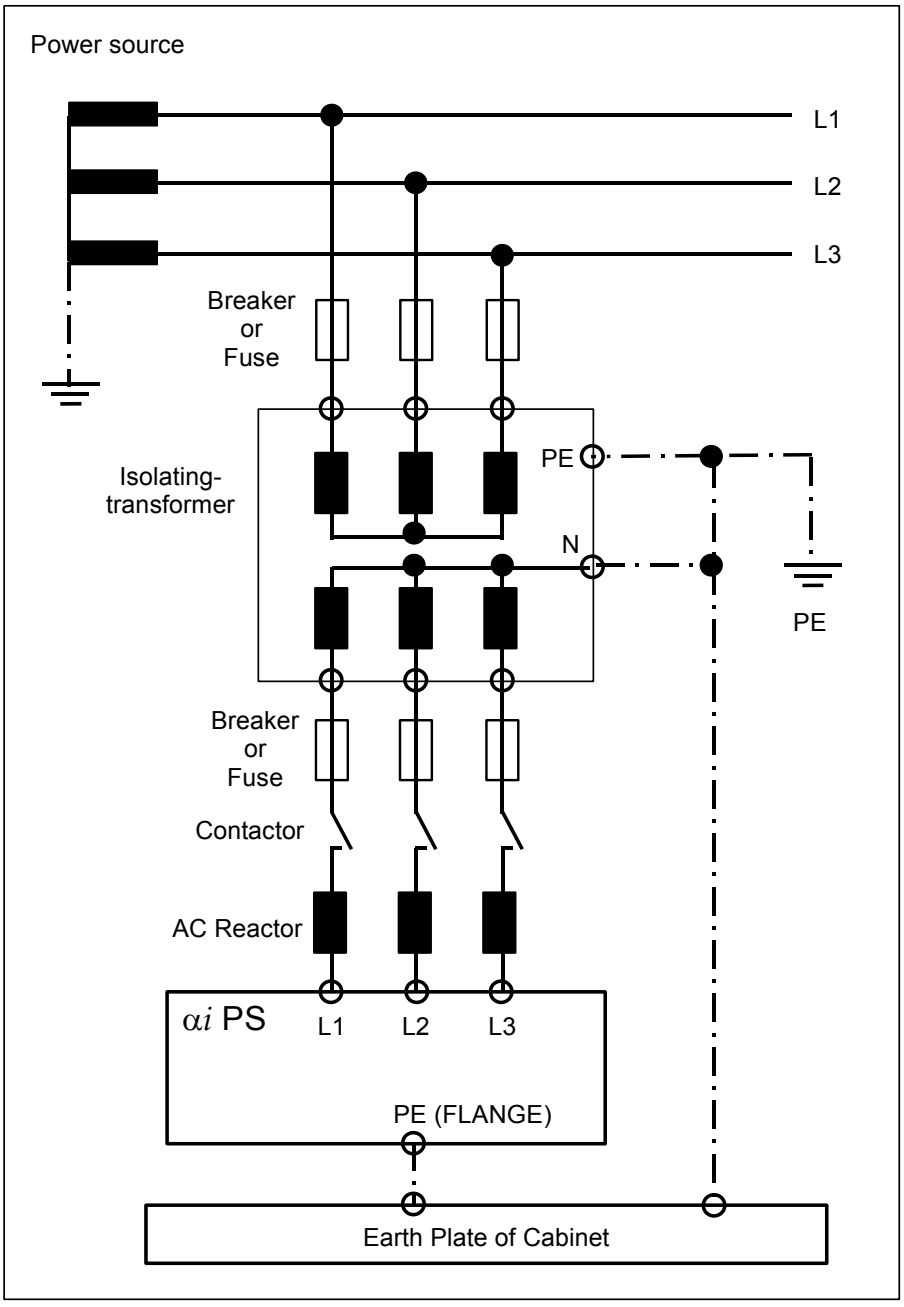

(e) TT-power system

No.	Power system	Power specification	Power supply of amplifier
5	TT-power system	• Delta connection • Single-phase grounding on the power supply side • No PE provided on the power line	• An isolating-transformer is used. • A star connection is made on the secondary side of an isolating-transformer, and the neutral point is grounded.

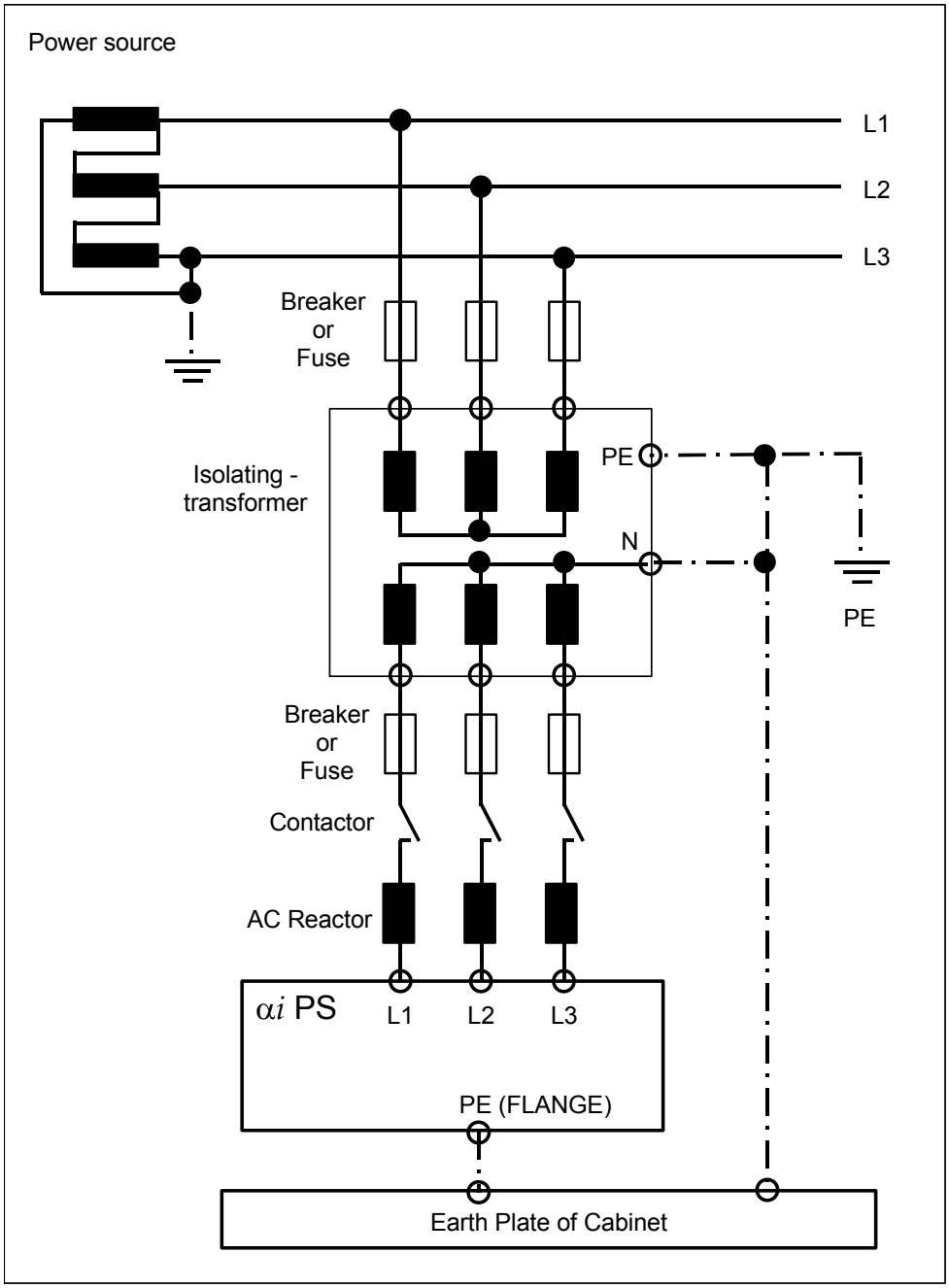

(f) IT-power system

No.	Power system	Power specification	Power supply of amplifier
6	IT-power system	• Star connection • No direct ground connection made on the power supply side • No PE provided on the power line	• An isolating-transformer is used. • A star connection is made on the secondary side of an isolating-transformer, and the neutral point is grounded.

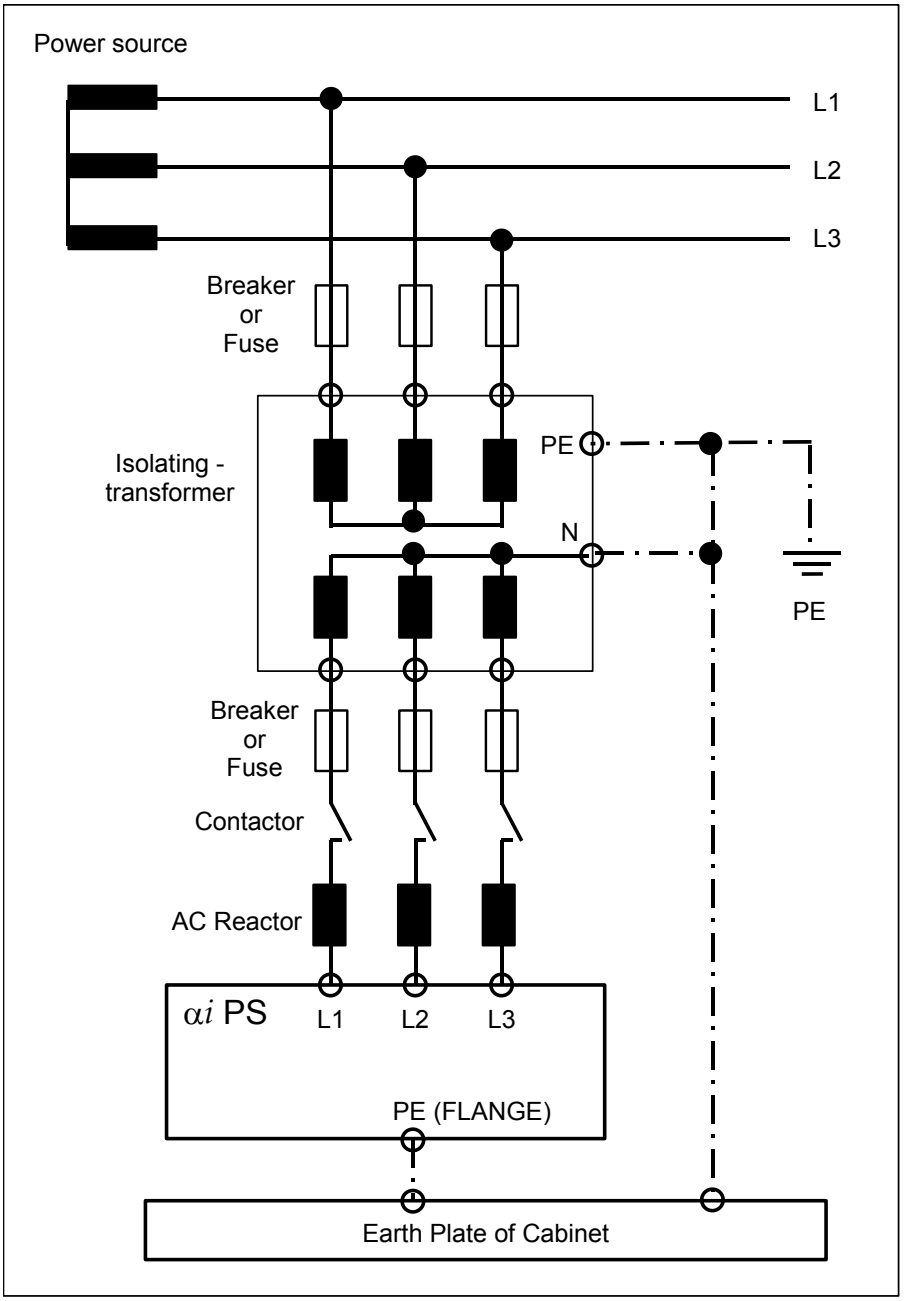

(g) IT-power system

No.	Power system	Power specification	Power supply of amplifier
7	IT-power system	• Delta connection • No direct ground connection made on the power supply side • No PE provided on the power line	• An isolating-transformer is used. • A star connection is made on the secondary side of an isolating-transformer, and the neutral point is grounded.

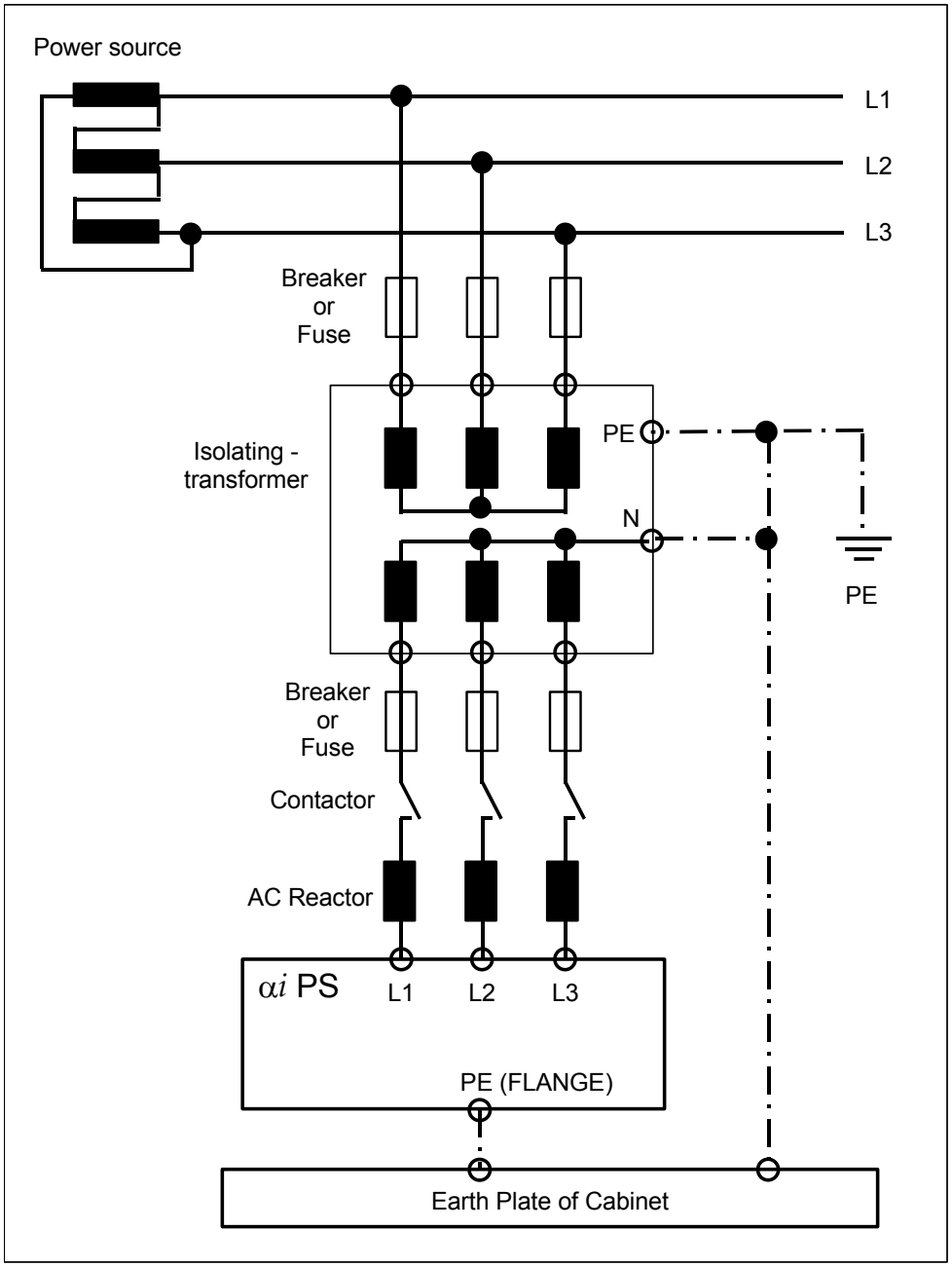

(7) Control power supply connection

- Specification of the control power supply voltage for the 400V input series of the αi series servo amplifier
  Single-phase 200 VAC to 240 VAC (-15%, +10%)
- When the power supply has a neutral point, power can be supplied from the neutral point and phase voltage to the control power supply.
  When an isolating-transformer is used, connect one phase of the control power supply to the neutral point on the secondary side of the isolating-transformer.

(a) Example of connection when the three-phase power supply voltage of the main circuit is 400 VAC to 415 VAC (-15%, +10%)
With the following connection, the control power supply voltage can be converted to single-phase 200 VAC to 240 VAC (-15%, +10%):

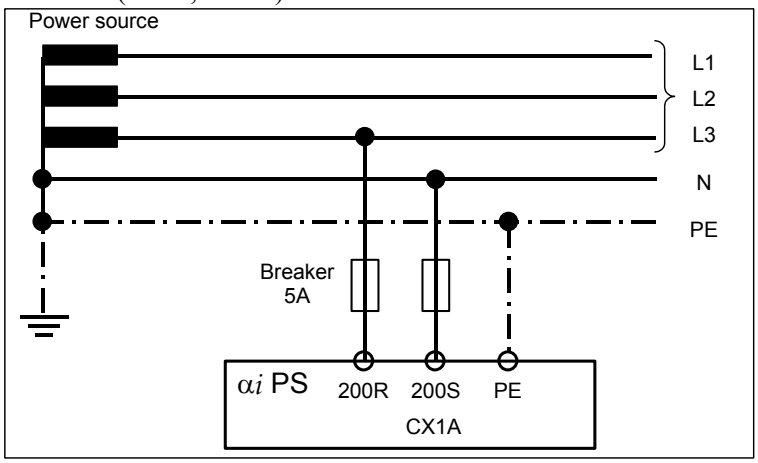

(b) Example of connection when the three-phase power supply voltage of the main circuit is 460 VAC or more
By using an auto-transformer, ensure that the single-phase power supply voltage for the control power supply is 200 VAC to 240 VAC (-15%, +10%).
(NOTE) Before starting to use the auto-transformer, check that it conforms to the relevant safety standards.

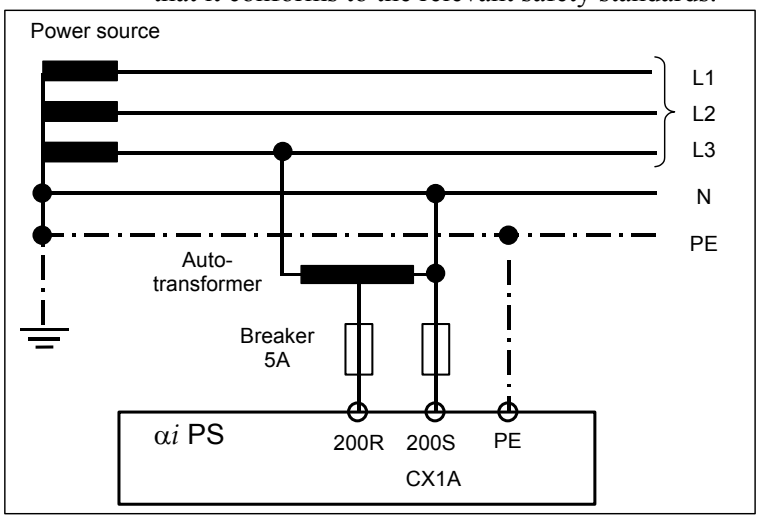

2.2 ENVIRONMENTAL CONDITIONS

The servo amplifier αi series must be installed in a sealed type cabinet to satisfy the following environmental requirements. For how to design such a cabinet, see Appendix G, "EXAMPLES OF RECOMMENDED POWER MAGNETICS CABINETS FOR SERVO AMPLIFIER INSTALLATION".

(1) Ambient Temperature
Ambient temperature of the unit :
0 to 55°C (at operation)
-20 to 60°C (at keeping and transportation)

(2) Humidity
Normally 90% RH or below, and condensation-free

(3) Vibration
In operation : Below 0.5G

(4) Atmosphere
Prevent conductive, flammable, or corrosive foreign matters, mists, or water droplets from entering the unit

> ⚠ **WARNING**
> If conductive or flammable foreign matters enter the unit, explosion or corruption may be caused.
> If corrosive or conductive mists or water droplets are attached to an electronic circuit, unexpected operation may be caused in the circuit.
> The electronic circuit portion must be installed in an environment of pollution level 2 specified by IEC60664-1. To achieve pollution level 2 in a severe machine tool environment, it is generally necessary to install the portion in a cabinet that satisfies IP54.

(5) Notes on Installation
The αi series servo amplifier is designed to be installed in the power magnetics cabinet, with its heat sink projecting through the back of the cabinet. This carries away the heat generated by the semiconductors, thus preventing heat from building up in the cabinet as much as possible. Therefore, note the following when installing the amplifier.
(a) Take appropriate measures to prevent coolant, oil mist, or chips from being adhered to the radiator and fan motors. A deposit of coolant, oil mist, or chips on the radiator or fan motors can lower the cooling efficiency. In some cases, the amplifier characteristics cannot sometimes be satisfied. The deposit may also reduce the service life of the fan motors or semiconductors.

When outside air is drawn in to the radiator, mount an air filter on the air inlet. In addition, ensure to seal doors and parts where cables are drawn in and out.

(b) No dust or cutting fluid must be able to enter through the exhaust port. The flow of cooling air must not be obstructed.

(c) The amplifier must be installed where it can be easily inspected, removed, and remounted for maintenance.

(d) Current lines and signal lines must be separated and noise must be suppressed. See the section 5.3 and the connection manual for each CNC for details.

(e) Each amplifier must be installed vertically.

(f) Servo amplifiers are to be arranged horizontally. When arranging servo amplifiers vertically from necessity, note the following:

1) Ensure that cooling air from a lower amplifier does not blow directly against the upper amplifier. Otherwise, radiation performance can degrade and the rated output may not be satisfied.

2) Ensure that the flow of cooling air of a lower amplifier is not impeded.

(g) Maintenance areas must be reserved for each servo amplifier.

(6) Derating
Consider derating as shown below, according to ambient temperatures.

(a) αi SV series
The solid line indicates derating when HRV2 is applied, the dotted line indicates derating when HRV3 is applied, and the dot-dash line indicates derating when HRV4 is applied.

αi SV 40 to 160

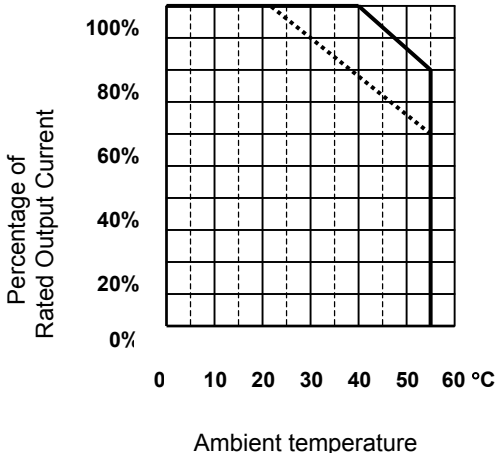

αi SV 20/40 to 160/160

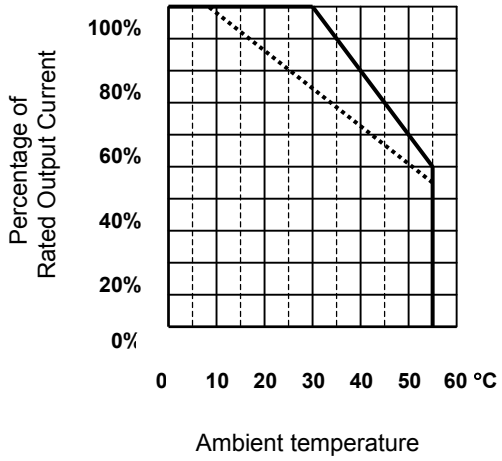

> ⚠ **CAUTION**
> HRV4 cannot be applied to A06B-6114-Hxxx and -6124-Hxxx.

αi SV 4 to 20
αi SV 4/4 to αi SVM20/20
αi SV 4/4/4 to αi SV 20/20/40

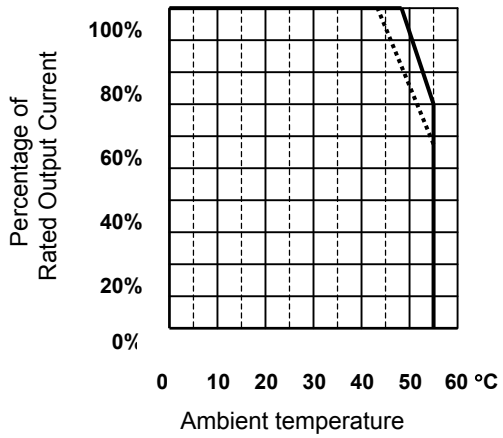

αi SV 360

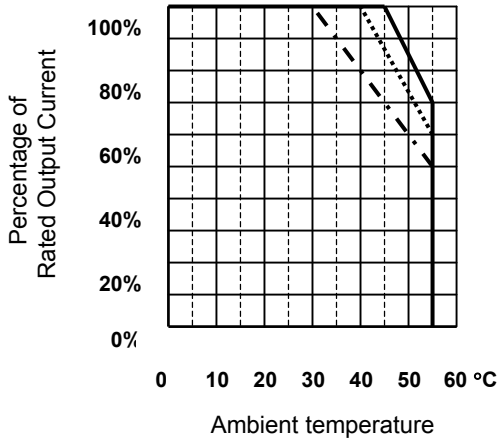

αi SV 20L to 160L (When HRV4 is applied)

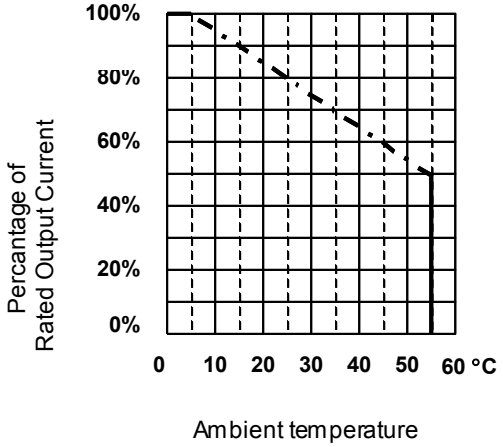

⚠ CAUTION
HRV4 cannot be applied to A06B-6114-Hxxx and -6124-Hxxx.

αi SV 20/20L to 80/80L (When HRV4 is applied)

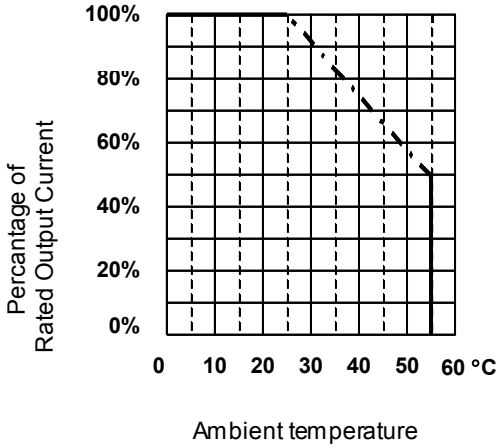

αi SV 10HV to 80HV

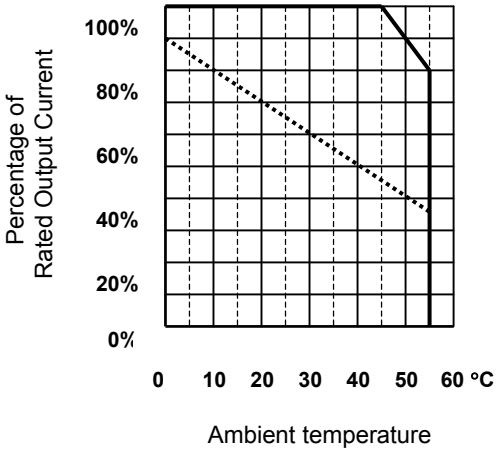

αi SV 180HV

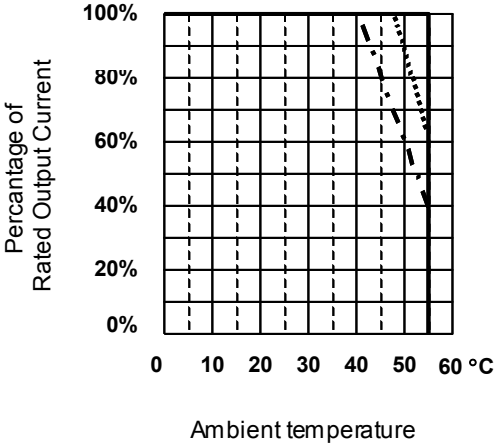

⚠ CAUTION
HRV4 cannot be applied to A06B-6114-Hxxx and -6124-Hxxx.

αi SV 360HV

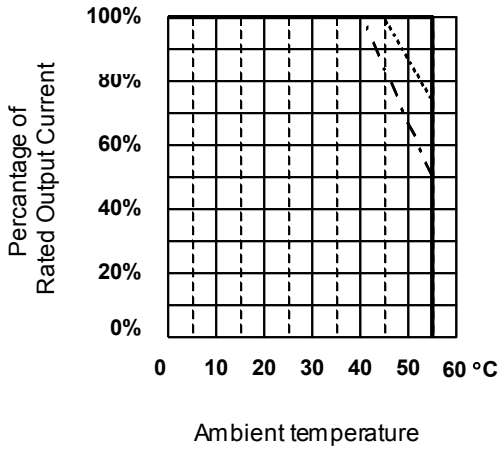

αi SV 10/10HV to 20/20HV

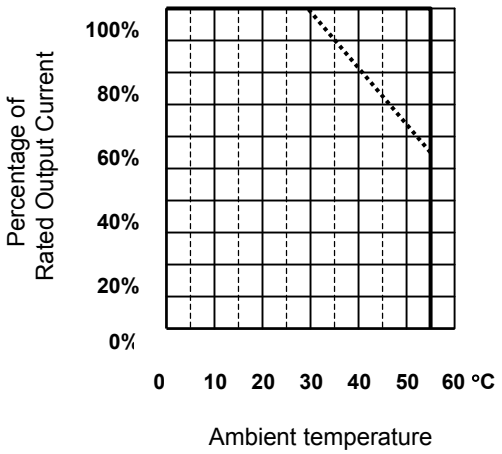

αi SV 20/40HV to 80/80HV

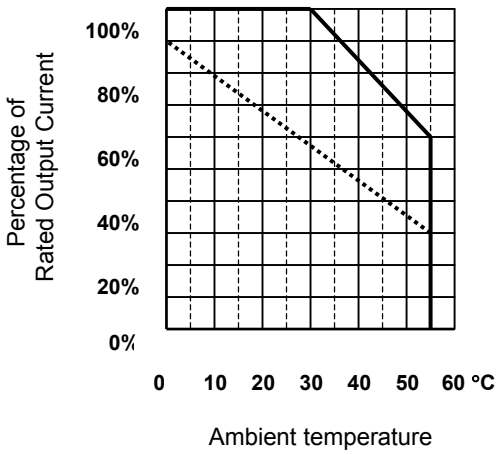

αi SV 10HVL to 80HVL (When HRV4 is applied)

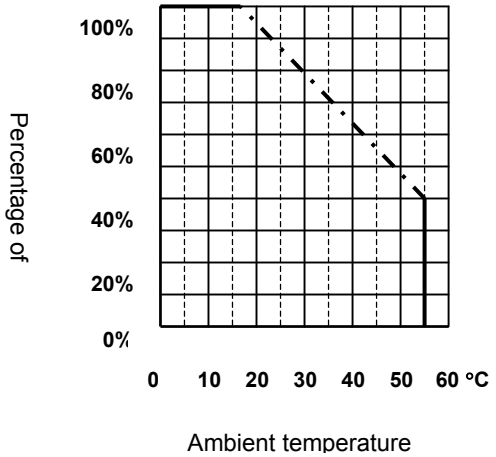

αi SV 10/10HVL to 40/40HVL (When HRV4 is applied)

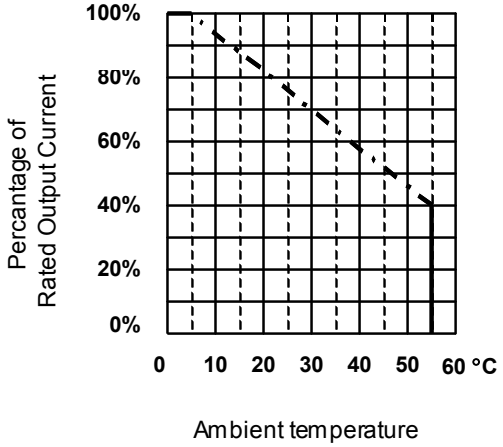

> ⚠ **CAUTION**
> HRV4 cannot be applied to A06B-6114-Hxxx and -6124-Hxxx.

(b) αi SP series
αi SP 2.2 to 55
αi SP 5.5HV to 100HV

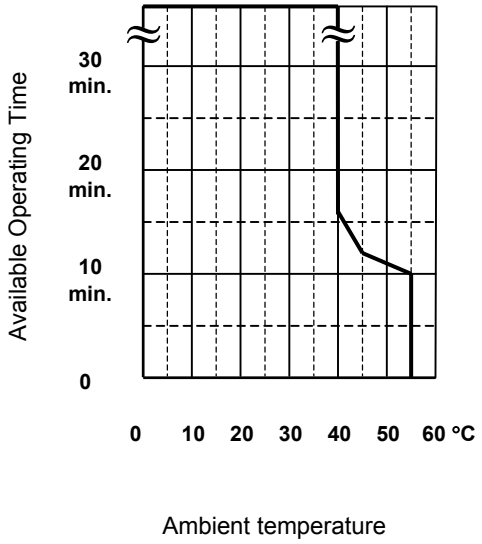

2.3 SPECIFICATIONS OF THE MODULES

2.3.1 αi PS series

200-V input series - power source regeneration type

Item \ Model		αi PS 5.5	αi PS 11	αi PS 15	αi PS 26	αi PS 30	αi PS 37	αi PS 55
Power supply (Note 1)	Main circuit	200 to 240VAC +10%,-15%,3φ 50/60Hz, ±1Hz						
	Control power	200 to 240VAC +10%,-15%,1φ 50/60Hz, ±1Hz						
Power equipment capacity	Main circuit	9kVA	17kVA	22kVA	37kVA	44kVA	53kVA	79kVA
	Control power	0.7kVA						
Rated output capacity (Note 2)		6.8kW	13.2kW	17.5kW	29.8kW	35kW	43kW	65kW
Control method		Regenerative control (power source generation)						

Output capacities for motor selection

Item \ Model	αi PS 5.5	αi PS 11	αi PS 15	αi PS 26	αi PS 30	αi PS 37	αi PS 55
Rated output capacity	5.5kW	11kW	15kW	26kW	30kW	37kW	55kW
Maximum output capacity	13kW	24kW	34kW	48kW	64kW	84kW	125kW
Peak maximum output capability	22kW	38kW	51kW	73kW	85kW	106kW	192kW

NOTE
1 A power transformer is necessary for voltages other than those listed in above table.
2 When selecting an αi PS unit, use "Output capacities for motor selection".
3 The values in the above table are applied when A06B-6140-Hxxxx is used. When A06B-6110-Hxxxx is used, the values of the maximum output capacity and peak maximum output capacity differ as shown in the table below.

Output capacities for motor selection (when A06B-6110-Hxxx is used)

Item \ Model	αi PS 5.5	αi PS 11	αi PS 15	αi PS 26	αi PS 30	αi PS 37	αi PS 55
Maximum output capacity	11kW	20kW	28kW	40kW	53kW	70kW	104kW
Peak maximum output capability	20kW	34kW	46kW	66kW	77kW	96kW	174kW

200-V input series - resister discharge type (αi PS_R)

Item \ Model		αi PS_R 3	αi PS_R 5.5
Power supply (Note 1)	Main circuit	200 to 240VAC +10%,-15%,3ϕ 50/60Hz, ±1Hz	
	Control power	200 to 240VAC +10%,-15%,1ϕ 50/60Hz, ±1Hz	
Power equipment capacity	Main circuit	5kVA	12kVA
	Control power	0.5kVA	
Rated output capacity (Note 2)		3.8kW	9.4kW
Control method		Regenerative control (resister discharge)	

Output capacities for motor selection

Item \ Model	αi PS_R 3	αi PS_R 5.5
Rated output capacity	3kW	7.5kW
Maximum output capacity	12kW	20kW

NOTE
1 A power transformer is necessary for voltages other than those listed in above table.
2 When selecting an αi PS_R unit, use "Output capacities for motor selection".
3 The αi PS_R 3 and αi PS_R 5.5 require regenerative discharge unit.

400-V input series - power source regeneration type

Item \ Model		αi PS 11HV	αi PS 18HV	αi PS 30HV	αi PS 45HV	αi PS 75HV	αi PS 100HV
Power supply (Note 1)	Main circuit	400 to 480VAC +10%,-15%,3ϕ 50/60Hz, ±1Hz					
	Control power	200 to 240VAC +10%,-15%,1ϕ 50/60Hz, ±1Hz					
Power equipment capacity	Main circuit	17kVA	26kVA	44kVA	64kVA	107kVA	143kVA
	Control power	0.7kVA					
Rated output capacity (Note 2)		13kW	21kW	35kW	50kW	82kW	110kW
Control method		Regenerative control (power source regeneration)					

Output capacities for motor selection

Item \ Model	αi PS 11HV	αi PS 18HV	αi PS 30HV	αi PS 45HV	αi PS 75HV	αi PS 100HV
Rated output capacity	11kW	18kW	30kW	45kW	75kW	100kW
Maximum output capacity	24kW	42kW	72kW	102kW	144kW	180kW
Peak maximum output capability	38kW	64kW	96kW	137kW	193kW	220kW

NOTE
1 A power transformer is necessary for voltages other than those listed in above table.
2 When selecting an αi PS unit, use "Output capacities for motor selection".
3 The values in the above table are applied when A06B-6150-Hxxxx is used. When A06B-6120-Hxxxx is used, the values of the maximum output capacity and peak maximum output capacity differ as shown in the table below.

Output capacities for motor selection (when A06B-6120-Hxxx is used)

Item \ Model	αi PS 11HV	αi PS 18HV	αi PS 30HV	αi PS 45HV	αi PS 75HV	αi PS 100HV
Maximum output capacity	20kW	35kW	60kW	85kW	120kW	150kW
Peak maximum output capability	34kW	58kW	87kW	124kW	175kW	200kW

How to calculate the power equipment capacity

Calculate the power equipment capacity using the formula below.

$$\text{Power supply capacity (kVA)} = \frac{\text{Rated capacity calculated in Section 4.3 (kW)}}{\text{Rated capacity of power supply module (kW)}} \times \text{Power supply capacity of power supply module having rated output (kVA)}$$

NOTE
Select a Power supply for which, when the motor is accelerated, the input voltage variation does not exceed 7%.

How to calculate the input current of the αi PS

Calculate the input current of the αi PS by using the formula below. Refer to the result when selecting the MCC, power cable, and circuit breaker 1, to be connected to the αi PS input section.
(Margin for selection: 1 to 1.5 times)

$$\text{PS input current (Arms)} = \frac{\text{Power equipment capacity (kVA)}}{\sqrt{3} \times \text{Nominal supply voltage (Vrms)}} \times 1.2 \text{ (margin)}$$

NOTE
Under normal conditions, assume that the nominal supply voltage (Vrms) is 200 Vrms for the 200-V input series or 400 Vrms for the 400-V input series.

2.3.2 αi SV series

Specifications (common)

Item	Specifications
Main circuit control method	Sine-wave PWM control with transistor (IGBT) bridge
Applicable CNC	16*i*-B, 18*i*-B, 21*i*-B, 0*i*-B/C/D, and 30*i*/31*i*/32*i*

> ⚠ **CAUTION**
> HRV4 cannot be applied to A06B-6114-Hxxx and -6124-Hxxx.

200-V input series - 1-axis amplifier

Name	Axis	Rated output current [Arms]	Nominal current limit [Apeak]
αi SV 4	-	1.5	4
αi SV 20	-	6.5	20
αi SV 20L	-	6.5	20
αi SV 40	-	13	40
αi SV 40L	-	13	40
αi SV 80	-	19	80
αi SV 80L	-	19	80
αi SV 160	-	45	160
αi SV 160L	-	45	160
αi SV 360	-	115	360

200-V input series - 2-axis amplifier

Name	Axis	Rated output current [Arms]	Nominal current limit [Apeak]
αi SV 4/4	L	1.5	4
	M	1.5	4
αi SV 4/20	L	1.5	4
	M	6.5	20
αi SV 20/20	L	6.5	20
	M	6.5	20
αi SV 20/40	L	6.5	20
	M	13	40
αi SV 40/40	L	13	40
	M	13	40
αi SV 40/80	L	13	40
	M	19	80
αi SV 80/80	L	19	80
	M	19	80
αi SV 80/160	L	19	80
	M	39	160
αi SV 160/160	L	39	160
	M	39	160
αi SV 20/20L	L	6.5	20
	M	6.5	20

Name	Axis	Rated output current [Arms]	Nominal current limit [Apeak]
αi SV 20/40L	L	6.5	20
	M	13	40
αi SV 40/40L	L	13	40
	M	13	40
αi SV 40/80L	L	13	40
	M	19	80
αi SV 80/80L	L	19	80
	M	19	80
αi SV 80/160L	L	19	80
	M	39	160

NOTE
The current limit (peak value) is a standard value. It varies by about ±10%, depending on the circuit constants.

200-V input series - 3-axis amplifier

Name	Axis	Rated output current [Arms]	Nominal current limit [Apeak]
αi SV 4/4/4	L	1.5	4
	M	1.5	4
	N	1.5	4
αi SV 20/20/20	L	6.5	20
	M	6.5	20
	N	6.5	20
αi SV 20/20/40	L	6.5	20
	M	6.5	20
	N	13	40

400-V input series - 1-axis amplifier

Name	Axis	Rated output current [Arms]	Nominal current limit [Apeak]
αi SV 10HV	-	3.1	10
αi SV 20HV	-	5.6	20
αi SV 40HV	-	9.1	40
αi SV 80HV	-	18.2	80
αi SV 180HV	-	58	180
αi SV 360HV	-	115	360
αi SV 10HVL	-	3.1	10
αi SV 20HVL	-	5.6	20
αi SV 40HVL	-	9.1	40
αi SV 80HVL	-	18.2	80

400-V input series - 2-axis amplifier

Name	Axis	Rated output current [Arms]	Nominal current limit [Apeak]
αi SV 10/10HV	L	3.1	10
	M	3.1	10
αi SV 20/20HV	L	5.6	20
	M	5.6	20
αi SV 20/40HV	L	5.6	20
	M	9.1	40
αi SV 40/40HV	L	9.1	40
	M	9.1	40
αi SV 40/80HV	L	9.1	40
	M	18.2	80
αi SV 80/80HV	L	18.2	80
	M	18.2	80
αi SV 10/10HVL	L	3.1	10
	M	3.1	10
αi SV 20/20HVL	L	5.6	20
	M	5.6	20
αi SV 20/40HVL	L	5.6	20
	M	9.1	40
αi SV 40/40HVL	L	9.1	40
	M	9.1	40

NOTE
The current limit (peak value) is a standard value. It varies by about ±10%, depending on the circuit constants.

2.3.3 αi SP series

200-V input series

Item \ Model	αi SP 2.2	αi SP 5.5	αi SP 11	αi SP 15	αi SP 22	αi SP 26	αi SP 30	αi SP 37	αi SP 45	αi SP 55
Rated output	13A	27A	48A	63A	95A	111A	133A	165A	198A	250A
(HRV type)	Spindle HRV2					Spindle HRV1 (Note 3)				
Main circuit control method	Sine-wave PWM control with transistor (IGBT) bridge									
Speed control range	Speed ratio 1:100									
Speed variation rate	0.1% or less of maximum speed (load variation: 10% to 100%)									
Applicable CNC	16*i*-B, 18*i*-B, 21*i*-B, 0*i*-B/C/D, and 30*i*/31*i*/32*i*									
Applicable motors (Note 1) (typical examples)	αi I 0.5 αi I 1	αi I 1.5 αi I 2 αi I 3	αi I 6 αi I 8 αi I P 12	αi I 12 αi I P 15 αi I P 18	αi I 15 αi I 18 αi I P 22 αi I P 30	αi I 22 αi I P 40 αi I P 50	αi I P 60	(Note 2)	αi I 30 αi I 40	αi I 50

400-V input series

Item \ Model	αi SP 5.5HV	αi SP 11HV	αi SP 15HV	αi SP 30HV	αi SP 45HV	αi SP 75HV	αi SP 100HV
Rated output	14A	23A	32A	70A	107A	170A	200A
(HRV type)	HRV2		HRV1 注 3				
Main circuit control method	Sine-wave PWM control with transistor (IGBT) bridge						
Speed control range	Speed ratio 1:100						
Speed variation rate	0.1% or less of maximum speed (load variation: 10% to 100%)						
Applicable CNC	16*i*-B, 18*i*-B, 21*i*-B, 0*i*-B/C/D, and 30*i*/31*i*/32*i*						
Applicable motors (Note 1) (typical examples)	αi I 0.5HV αi I 1HV αi I 2HV αI I 3HV	αi I 6HV αi I 8HV	αi I P 15HV	αi I 15HV αi I 22HV αi I P 40HV αi I P 50HV	αi I 30HV αi I 40HV αi I P 60HV	αi I 60HV	αi I 100HV

NOTE
1 For combinations of motor models and amplifier models, refer to "Applicable spindle amplifier" in the specification list in the descriptions manual of the spindle motor.
2 Built-in spindle motors are applied.
3 For spindle HRV2, the rated current is derated as follows:
αi SP37 85% αi SP45 79%, αi SP55 80%
αi SP15HV 94%, αi SP30HV 83%, αi SP45HV 72%
αi SP75HV 83%, αi SP100HV 91%

Types (A and B) of αi SP models and sensors applicable to each type

Either of two αi SP models, types A and B, is available for each detector on the spindle to be used. The following lists combinations of an αi SP type, applicable sensors, and functions.

		Configuration	Configuration number									Remarks
			1	2	3	4	5	6	7	8	9	
Spindle system configuration	αi SP	TYPE A	O	O	O	O	O	O		O		
		TYPE B	O	O	O	O	O	O	O	O	O	
	Sensor on the motor	αiM	O				O	O	O	O	O	
		αiMZ sensor		O								
		αiBZ sensor (*8) (when a built-in motor is used)			O							
		αiCZ I sensor (when a built-in motor is used)				O						See next page.
	Sensor on the spindle	αi position coder					O					*3
		External 1-rotation						O				*3
		αiBZ sensor							O			*3
		αiCZ IS sensor								O		See next page.
		α position coder S									O	*3
Function	Rigid tapping		O*1	O*2	O	O	O	O*2	O	O	O	
	Orientation by a position coder			O*6	O	O	O		O	O	O	
	Orientation by the external one-rotation signal							O*2				*5
	Spindle synchronization	Velocity synchronization	O*2	O*6	O	O	O	O*2	O	O	O	*4
		Phase synchronization		O*6	O	O	O	O*7	O	O	O	*4
	Threading			O*6	O	O	O		O	O	O	
	Cs-axis contour control			O*6	O				O	O	O	

*1 The spindle and motor must be interconnected directly or with a timing belt or gear. No orientation is available to adjust the tapping start position.

*2 The spindle and motor must be interconnected with a timing belt or gear.

*3 The spindle and detector must be interconnected in one-to-one connection mode.

*4 Two motor amplifiers are required.

*5 Note that the stop position moves by a backlash between the spindle and motor because of the theory of operation.

*6 The spindle and motor must be interconnected directly or with a timing belt or gear in one-to-one connection mode.

*7 Before specifying spindle synchronization, perform orientation to detect the one-rotation signal (PC1DT=1).

*8 The αiCZ analog output type is also applicable.

Other functions

	TYPE A	TYPE B	Remarks
Analog output of load meter and speedometer	O	O	Connector JY1
Analog override input	O	O	Connector JY1
Excitation off monitor signal output	O	O	Connector JX4
Position coder signal output		O *1	Connector JX4
Spindle EGB function (Inter-SP communication function)		O *1	Connector JX4

*1 The α*i*CZ I sensor and α*i*CZ IS sensor are excluded.

> ⚠ **CAUTION**
> The excitation off state signal output is not supported by A06B-6111, -6112, -6121, and -6122.

Submodule SW

By using α*i* SP TYPE A or α*i* SP TYPE B with a Submodule SW, the spindle switch function for switching between two motors (main and sub) with one spindle amplifier can be used. (*2)
For details of the sub module SW, see Chapter 10.

*2 The α*i*CZ I sensor and α*i*CZ IS sensor are excluded.

Submodule SM

By using α*i* SP TYPE B with the Submodule SM, the synchronous built-in spindle motor Bi S series can be used.

> ⚠ **CAUTION**
> For the latest α*i*SP series, use Submodule SM unit version B or later.

α*i*CZ sensors (I, IS)

- Applicable spindle amplifiers
  Unit version B or later
  200-V system: A06B-6141-H002, -H006, -H011, -H015, -H030, -H037, -H055#H580
  400-V system: A06B-6151-H006, -H011, -H015, -H045, -H075, -H100#H580
  Unit version C or later
  200-V system: A06B-6141-H022, -H026, -H045#H580
  400-V system: A06B-6151-H030#H580
- The following functions cannot be used:
  Spindle switch control, differential spindle speed control, and position coder signal output
- The following functions are not supported at present:
  Synchronous spindle motor, spindle EGB, simple spindle EGB, torque tandem control, dual check safety (motor sensor side), disconnection detection disable signal

2.4 WEIGHT

αi PS

Model	Weight
αi PS_R 3	2.6kg
αi PS_R 5.5	4.3kg
αi PS 5.5	4.9kg
αi PS 11, 15, 11HV, 18HV	6.3kg
αi PS 26, 30, 37, 30HV, 45HV	10.7kg
αi PS 55, 75HV, 100HV	22.0kg

αi SV

Model	Weight
αi SV 4, 20, 10HV	2.2Kg
αi SV 40, 80, 160, 20L, 40L, 80L αi SV 20HV, 40HV, 80HV, 10HVL, 20HVL,40HVL	3.9Kg
αi SV 4/4, 4/20, 20/20, 10/10HV	2.4Kg
αi SV 20/40, 40/40, 40/80, 80/80, 20/40L, 40/40L αi SV 20/20HV	4.6Kg
αi SV 160L, 80HVL	
αi SV 80/160, 160/160, 40/80L, 80/80L αi SV 20/40HV, 40/40HV, 40/80HV, αi SV 80/80HV, 20/40HVL, 40/40HVL	5.5Kg
αi SV 4/4/4, αi SV 20/20/20	2.6Kg
αi SV 20/20/40	3.8Kg
αi SV 360, 180HV	10.7Kg
αi SV 360HV	22.0Kg
DBM(A06B-6079-H401)	5.4Kg
DBM(A06B-6069-H300)	10.0Kg

αi SP

Model	Weight
αi SP 2.2	4.9Kg
αi SP 5.5, 5.5HV	6.1Kg
αi SP 11, 15, 11HV, 15HV	6.3Kg
αi SP 22, 26, 30, 37,30HV, 45HV	10.7Kg
αi SP 45, 55, 75HV, 100HV	22.0Kg

AC reactor

Model	Weight
A81L-0001-0083#3C	1.1kg
A81L-0001-0171	1.1kg
A81L-0001-0101#C	3.0kg
A81L-0001-0155	4.5kg
A81L-0001-0156	6.5kg
A81L-0001-0157	9.5kg
A81L-0001-0158	9.2kg
A81L-0001-0159	16.5kg

Model	Weight
A81L-0001-0160	20.0kg
A81L-0001-0163	8.0kg
A81L-0001-0164	14.0kg
A81L-0001-0165	26.0kg
A81L-0001-0167	8.2kg
A81L-0001-0170	4.2kg

Regenerative discharge unit

Model	Weight
A06B-6089-H510	0.8kg
A06B-6089-H500	2kg
A06B-6089-H711	5kg
A06B-6089-H712	6kg
A06B-6089-H713	5kg

Transformer

Model	Weight
A80L-0024-0006	27kg
A80L-0024-0003	36kg
A06B-6052-J001	61kg
A06B-6044-J006	115kg
A06B-6044-J007	165kg
A06B-6044-J010	260kg
A06B-6044-J015	375kg

Noise filter

Model		Weight
A06B-6077-K155	3SUP-HL30-ER-6 : *1	5.2kg
A06B-6077-K156	3SUP-HL75-ER-6 : *1	12.0kg
A06B-6077-K157	3SUP-HL150-ER-6: *1	23.5kg
A06B-6077-K158	3SUP-HL200-ER-6: *1	24.5kg
A06B-6110-K160	NF3050C-VQ : *2	2.9kg
A06B-6110-K161	NF3080C-VQ : *2	3.6kg
A06B-6110-K162	NF3150C-VQ : *2	9.0kg
A06B-6110-K163	NF3200C-VQ : *2	16kg
A06B-6110-K164	NF3250C-VQ : *2	16kg

*1 manufacturer Okaya electric Inc.
*2 manufacturer Sosin electric Inc.

3 ORDERING INFORMATION

Chapter 3, "ORDERING INFORMATION", consists of the following sections:

3.1 SERVO AMPLIFIER....46
3.1.1 200-V Input Series....46
3.1.1.1 αi PS series....46
3.1.1.2 αi PS_R series....46
3.1.1.3 αi SV series....47
3.1.1.4 αi SP series....49
3.1.2 400-V Input Series....50
3.1.2.1 αi PS series....50
3.1.2.2 αi SV series....51
3.1.2.3 αi SP series....53
3.1.3 Others....54
3.1.3.1 AC reactor....54
3.1.3.2 AC line filter....56
3.1.3.3 Sub module SW....57
3.1.3.4 Sub module SM....57
3.1.3.5 Connectors....58
3.1.3.6 Fuses....64
3.1.3.7 Power transformer....65
3.1.3.8 Regenerative discharge unit....69
3.1.3.9 Cables....70
3.1.3.10 Circuit breaker and magnetic contactor....71
3.1.3.11 Lightning surge protector....74
3.1.3.12 Noise filter....75
3.1.3.13 Sensors for servo....75
3.1.3.14 Sensors for spindle....76
3.1.3.15 Power line switch unit....77
3.1.3.16 Battery for absolute Pulsecoder....78

3.1 SERVO AMPLIFIER

3.1.1 200-V Input Series

3.1.1.1 αi PS series

Category	Ordering number	Name	Remarks
Standard	A06B-6140-H006	αi PS 5.5	
	A06B-6140-H011	αi PS 11	
	A06B-6140-H015	αi PS 15	
	A06B-6140-H026	αi PS 26	
	A06B-6140-H030	αi PS 30	
	A06B-6140-H037	αi PS 37	
	A06B-6140-H055	αi PS 55	

NOTE
See Section 4.3, “HOW TO SELECT THE αi PS series (POWER SUPPLY)” for details of how to select the αi PS.

3.1.1.2 αi PS_R series

Category	Ordering number	Name	Remarks
Standard	A06B-6115-H003	αi PS_R 3	
	A06B-6115-H006	αi PS_R 5.5	

Category	Ordering number	Name	Remarks
Standard	A06B-6115-H003	PSMR-3*i*	
	A06B-6115-H006	PSMR-5.5*i*	

NOTE
See Section 4.4, “HOW TO SELECT THE αi PS_R series (POWER SUPPLY RESISTOR DISCHARGE TYPE)”for details of how to select the αi PS_R.

3.1.1.3 αi SV series

1-axis amplifier

Category	Ordering number	Name	Remarks
Standard	A06B-6117-H101	αi SV 4	HRV2 and HRV3 supported
	A06B-6117-H103	αi SV 20	HRV2 and HRV3 supported
	A06B-6117-H104	αi SV 40	HRV2 and HRV3 supported
	A06B-6117-H105	αi SV 80	HRV2 and HRV3 supported
	A06B-6117-H106	αi SV 160	HRV2 and HRV3 supported
	A06B-6117-H109	αi SV 360	DBM required HRV2, HRV3, and HRV4 supported
	A06B-6117-H153	αi SV 20L	HRV4 supported
	A06B-6117-H154	αi SV 40L	HRV4 supported
	A06B-6117-H155	αi SV 80L	HRV4 supported
	A06B-6117-H156	αi SV 160L	HRV4 supported

2-axis amplifier

Category	Ordering number	Name	Remarks
Standard	A06B-6117-H201	αi SV 4/4	HRV2 and HRV3 supported
	A06B-6117-H203	αi SV 4/20	HRV2 and HRV3 supported
	A06B-6117-H205	αi SV 20/20	HRV2 and HRV3 supported
	A06B-6117-H206	αi SV 20/40	HRV2 and HRV3 supported
	A06B-6117-H207	αi SV 40/40	HRV2 and HRV3 supported
	A06B-6117-H208	αi SV 40/80	HRV2 and HRV3 supported
	A06B-6117-H209	αi SV 80/80	HRV2 and HRV3 supported
	A06B-6117-H210	αi SV 80/160	HRV2 and HRV3 supported
	A06B-6117-H211	αi SV 160/160	HRV2 and HRV3 supported
	A06B-6117-H255	αi SV 20/20L	HRV4 supported
	A06B-6117-H256	αi SV 20/40L	HRV4 supported
	A06B-6117-H257	αi SV 40/40L	HRV4 supported
	A06B-6117-H258	αi SV 40/80L	HRV4 supported
	A06B-6117-H259	αi SV 80/80L	HRV4 supported

3-axis amplifier

Category	Ordering number	Name	Remarks
Standard	A06B-6117-H301	αi SV 4/4/4	HRV2 and HRV3 supported
	A06B-6117-H303	αi SV 20/20/20	HRV2 and HRV3 supported
	A06B-6117-H304	αi SV 20/20/40	HRV2 and HRV3 supported

Dynamic brake module

Category	Ordering number	Name	Remarks
Standard	A06B-6079-H401	DBM	αi SV 360

NOTE

1 See Section 4.1, “HOW TO SELECT THE αiSV SERIES (SERVOAMPLIFIER)” for details of how to select the αiSV.

2 For the αi SV 360, a dynamic brake module (DBM) is required.
The dynamic brake module is used to immediately stop the motor at emergency stop. Other αi SV models contain a similar function.

3.1.1.4 αi SP series

Ordering numbers depend on the detectors being used (function).

(1) TYPE A (1 spindle sensor input)

Category	Ordering number	Name	Remarks
Standard	A06B-6141-H002#H580	αi SP 2.2	
	A06B-6141-H006#H580	αi SP 5.5	
	A06B-6141-H011#H580	αi SP 11	
	A06B-6141-H015#H580	αi SP 15	
	A06B-6141-H022#H580	αi SP 22	
	A06B-6141-H026#H580	αi SP 26	
	A06B-6141-H030#H580	αi SP 30	
	A06B-6141-H037#H580	αi SP 37	
	A06B-6141-H045#H580	αi SP 45	
	A06B-6141-H055#H580	αi SP 55	

(2) TYPE B (2 spindle sensor inputs)

Category	Ordering number	Name	Remarks
Standard	A06B-6142-H002#H580	αi SP 2.2	
	A06B-6142-H006#H580	αi SP 5.5	
	A06B-6142-H011#H580	αi SP 11	
	A06B-6142-H015#H580	αi SP 15	
	A06B-6142-H022#H580	αi SP 22	
	A06B-6142-H026#H580	αi SP 26	
	A06B-6142-H030#H580	αi SP 30	
	A06B-6142-H037#H550	αi SP 37	
	A06B-6142-H045#H580	αi SP 45	
	A06B-6142-H055#H580	αi SP 55	

NOTE
See Section 4.2, “HOW TO SELECT THE αiSP SERIES (SPINDLE AMPLIFIER)” for details of how to select the αiSP.

3.1.2 400-V Input Series

3.1.2.1 αi PS series

Category	Ordering number	Name	Remarks
Standard	A06B-6150-H011	αi PS 11HV	
	A06B-6150-H018	αi PS 18HV	
	A06B-6150-H030	αi PS 30HV	
	A06B-6150-H045	αi PS 45HV	
	A06B-6150-H075	αi PS 75HV	
	A06B-6150-H100	αi PS 100HV	

NOTE
See Section 4.3, “HOW TO SELECT THE αi PS series (POWER SUPPLY)” for details of how to select the αi PS.

3.1.2.2 αi SV series

1-axis amplifier

Category	Ordering number	Name	Remarks
Standard	A06B-6127-H102	αi SV 10HV	HRV2 and HRV3 supported
	A06B-6127-H103	αi SV 20HV	HRV2 and HRV3 supported
	A06B-6127-H104	αi SV 40HV	HRV2 and HRV3 supported
	A06B-6127-H105	αi SV 80HV	HRV2 and HRV3 supported
	A06B-6127-H106	αi SV 180HV	DBM required HRV2, HRV3, and HRV4 supported
	A06B-6127-H109	αi SV 360HV	DBM required HRV2, HRV3, and HRV4 supported
	A06B-6127-H152	αi SV 10HVL	HRV4 supported
	A06B-6127-H153	αi SV 20HVL	HRV4 supported
	A06B-6127-H154	αi SV 40HVL	HRV4 supported
	A06B-6127-H155	αi SV 80HVL	HRV4 supported

2-axis amplifier

Category	Ordering number	Name	Remarks
Standard	A06B-6127-H202	αi SV 10/10HV	HRV2 and HRV3 supported
	A06B-6127-H205	αi SV 20/20HV	HRV2 and HRV3 supported
	A06B-6127-H206	αi SV 20/40HV	HRV2 and HRV3 supported
	A06B-6127-H207	αi SV 40/40HV	HRV2 and HRV3 supported
	A06B-6127-H208	αi SV 40/80HV	HRV2 and HRV3 supported
	A06B-6127-H209	αi SV 80/80HV	HRV2 and HRV3 supported
	A06B-6127-H252	αi SV 10/10HVL	HRV4 supported
	A06B-6127-H255	αi SV 20/20HVL	HRV4 supported
	A06B-6127-H256	αi SV 20/40HVL	HRV4 supported
	A06B-6127-H257	αi SV 40/40HVL	HRV4 supported

Dynamic brake module

Category	Ordering number	Name	Remarks
Standard	A06B-6079-H401	DBM	αi SV 180HV, αi SV 360HV
	A06B-6069-H300	DBM	αi SV 360HV (Note 3)

NOTE

1 See Section 4.1, “HOW TO SELECT THE αiSV SERIES (SERVOAMPLIFIER)” for details of how to select the αiSV.
2 For the αi SV 180HV and αi SV 360HV, a dynamic brake module (DBM) is required.
The dynamic brake module is used to immediately stop the motor at emergency stop. Other αi SV models contain a similar function.
3 A06B-6069-H300 is used when the servo motor is the αi S1000HV, 2000HV, or 3000HV.

3.1.2.3 αi SP series

Ordering numbers depend on the detectors being used (function).

(1) TYPE A (1 spindle sensor input)

Category	Ordering number	Name	Remarks
Standard	A06B-6151-H006#H580	αi SP 5.5HV	
	A06B-6151-H011#H580	αi SP 11HV	
	A06B-6151-H015#H580	αi SP 15HV	
	A06B-6151-H030#H580	αi SP 30HV	
	A06B-6151-H045#H580	αi SP 45HV	
	A06B-6151-H075#H580	αi SP 75HV	
	A06B-6151-H100#H580	αi SP 100HV	

(2) TYPE B (2 spindle sensor inputs)

Category	Ordering number	Name	Remarks
Standard	A06B-6152-H006#H580	αi SP 5.5HV	
	A06B-6152-H011#H580	αi SP 11HV	
	A06B-6152-H015#H580	αi SP 15HV	
	A06B-6152-H030#H580	αi SP 30HV	
	A06B-6152-H045#H580	αi SP 45HV	
	A06B-6152-H075#H580	αi SP 75HV	
	A06B-6152-H100#H580	αi SP 100HV	

NOTE
See Section 4.2, “HOW TO SELECT THE αiSP SERIES (SPINDLE AMPLIFIER)” for details of how to select the αiSP.

3.1.3 Others

3.1.3.1 AC reactor

Category	Ordering number	Applicable models	Remarks
Standard	A81L-0001-0155	αi PS 5.5, 11	(Note)
	A81L-0001-0156	αi PS 15	
	A81L-0001-0157	αi PS 26	
	A81L-0001-0158	αi PS 30	
	A81L-0001-0159	αi PS 37	
	A81L-0001-0160	αi PS 55	
	A81L-0001-0163	αi PS 11HV, 18HV	(Note)
	A81L-0001-0164	αi PS 30HV, 45HV	
	A81L-0001-0165	αi PS 75HV, 100HV	
	A81L-0001-0167	αi PS 11HV	(Note)
	A81L-0001-0170	αi PS 5.5	(Note)

For the outside dimensions, see Subsection 8.1.2, "AC Reactor Unit". For the tightening torque, see Subsection 9.3.1.1, "Details of cable K1 (Common power supply line)".

NOTE
When an αiSV or αiSP unit with a small capacity is connected to the αiPS, the AC reactor unit A81L-0001-0170 (200-V input) or A81L-0001-0167 (400-V input) must be used. For details, see the next page.

AC reactor used when an αi SV or αi SP with a small capacity is connected to the αi PS

200-V input series

When only as many αi SV or αi SP units as indicated in the tables below are connected to a power regeneration type αi PS unit, AC reactor unit A81L-0001-0170 must be used.

⚠CAUTION
1 When using the normal AC reactor, depending on the power state (when the power impedance is low or the voltage is out of balance), power regeneration is maintained and input current becomes too large, possibly damaging the amplifier.
2 This problem does not occur in the resistance regeneration type αi PS_R.

αi SV

Name	Number of connected units	Ordering number (*1)
αi SV 4	1	A06B-6117-H101
αi SV 4	2	A06B-6117-H101
αi SV 20	1	A06B-6117-H103
αi SV 20	2	A06B-6117-H103
αi SV 20L	1	A06B-6117-H153
αi SV 20L	2	A06B-6117-H153
αi SV 4/4	1	A06B-6117-H201
αi SV 4/20	1	A06B-6117-H203
αi SV 20/20	1	A06B-6117-H205
αi SV 20/20L	1	A06B-6117-H255

αi SP

Name	Number of connected units	Ordering number (*2)
αi SP 2.2	1	A06B-6141-H002#H580 A06B-6142-H002#H580

*1 The same restriction applies to the old specification A06B-6114-Hxxx.
*2 The same restriction applies to the old specifications A06B-6111-Hxxx and A06B-6112-Hxxx.

400-V input series

When only as many αi SV or αi SP units as indicated in the tables below are connected to a power regeneration type αi PS unit, AC reactor unit A81L-0001-0167 must be used.

> ⚠ **CAUTION**
> When using the normal AC reactor, depending on the power state (when the power impedance is low or the voltage is out of balance), power regeneration is maintained and input current becomes too large, possibly damaging the amplifier.

αi SV

Name	Number of connected units	Ordering number (*1)
αi SV 10HV	1	A06B-6127-H102
αi SV 20HV	1	A06B-6127-H103
αi SV 10HVL	1	A06B-6127-H152
αi SV 20HVL	1	A06B-6127-H153
αi SV 10/10HV	1	A06B-6127-H202
αi SV 20/20HV	1	A06B-6127-H205
αi SV 10/10HVL	1	A06B-6127-H252
αi SV 20/20HVL	1	A06B-6127-H255

*1 The same restriction applies to the old specification A06B-6124-Hxxx.

3.1.3.2 AC line filter

Category	Ordering number	Applicable models	Remarks
Standard	A81L-0001-0083#3C	αi PS_R 3	
	A81L-0001-0101#C	αi PS_R 5.5	

For the dimensions of the AC line filters, see Section 8.1.3, “AC Line Filter”.
As a compatible product of the A81L-0001-0083#3C, the A81L-0001-0171 can be used.

3.1.3.3 Sub module SW

Category	Ordering number	Applicable models	Remarks
Optional	A06B-6111-H401	αi SP TYPE A, TYPE B	Main unit 60-mm width
	A06B-6111-K808	αi SP 90mm,150mm TYPE A	Connection cable One cable needs to be prepared for each sub module SW.
	A06B-6111-K809	αi SP 90mm,150mm TYPE B	
	A06B-6111-K810	αi SP 60mm, TYPE A	
	A06B-6111-K811	αi SP 60mm, TYPE B	

A sub module SW can be used with the αi SP to support the spindle switch function.

(a) A cable for connecting the sub module SW and the αi SP needs to be prepared.
(b) See Section 10.3, and prepare a metal fitting for mounting the sub module SW.

3.1.3.4 Sub module SM

Category	Ordering number	Applicable models	Remarks
Optional	A06B-6111-H403	αi SP 5.5HV~45HV TYPE B	
	A06B-6111-H404	αi SP 75HV~100HV TYPE B	

A sub module SM is used with the αi SP TYPE B to drive a synchronous spindle motor.

3.1.3.5 Connectors

The ordering drawing number of the connectors required for connection of input/output signals of each amplifier, and the configuration of each connector, are shown below.
The "Use" column of the table indicates connection symbol K*, which is described in Section 9.3, "CABLE CONNECTION DETAILS."
For the connector dimensions, see Appendix C.

(1) Usable with each amplifier:
Connectors for the αi PS interface (between CXA2A and CXA2B)

Category	Ordering number	Quantity	Use	Connection tool
Standard	A06B-6110-K210	Housing: 1 pcs. Contact: 8 pcs.	K69 (Note 1)	Contact crimping tool A06B-6110-K220#D2M
	A06B-6110-K211	Housing: 1 pcs. Contact: 2 pcs.	(Note 2)	Contact crimping tool A06B-6110-K220#D2M

NOTE
1 See Subsection 9.3.1.4 as for the detailed connection of K69.
2 See Subsection 9.3.2.10 as for the connection of battery.

(2) Usable with each amplifier:
Power line connectors for motors and power supplies

Category	Ordering number	Quantity	Use	Connection tool
Standard	A06B-6110-K200 #XXSS	Housing: 1 pcs. (XX key) Contact: 4 pcs. (SS size)	K1, K10, K21	Contact crimping tool A06B-6110-K220#D5SS
	A06B-6110-K200 #XXS	Housing: 1 pcs. (XX key) Contact: 4 pcs. (S size)	K1, K10, K21	Contact crimping tool A06B-6110-K220#D5S
	A06B-6110-K200 #XXM	Housing: 1 pcs. (XX key) Contact: 4 pcs. (M size)	K1, K10, K21	Contact crimping tool A06B-6110-K220#D5M
	A06B-6110-K200 #XXL	Housing: 1 pcs. (XX key) Contact: 4 pcs. (L size)	K1, K10, K21	Contact crimping tool A06B-6110-K220#D5L
	A06B-6110-K201 #XYSS	Housing: 1 pcs. (XY key) Contact: 4 pcs. (SS size)	K1, K10, K21	Contact crimping tool A06B-6110-K220#D5SS
	A06B-6110-K201 #XYS	Housing: 1 pcs. (XY key) Contact: 4 pcs. (S size)	K1, K10, K21	Contact crimping tool A06B-6110-K220#D5S
	A06B-6110-K201 #XYM	Housing: 1 pcs. (XY key) Contact: 4 pcs. (M size)	K1, K10, K21	Contact crimping tool A06B-6110-K220#D5M
	A06B-6110-K201 #XYL	Housing: 1 pcs. (XY key) Contact: 4 pcs. (L size)	K1, K10, K21	Contact crimping tool A06B-6110-K220#D5L
	A06B-6110-K202 #YYSS	Housing: 1 pcs. (YY key) Contact: 4 pcs. (SS size)	K1, K10, K21	Contact crimping tool A06B-6110-K220#D5SS
	A06B-6110-K202 #YYS	Housing: 1 pcs. (YY key) Contact: 4 pcs. (S size)	K1, K10, K21	Contact crimping tool A06B-6110-K220#D5S
	A06B-6110-K202 #YYM	Housing: 1 pcs. (YY key) Contact: 4 pcs. (M size)	K1, K10, K21	Contact crimping tool A06B-6110-K220#D5M
	A06B-6110-K202 #YYL	Housing: 1 pcs. (YY key) Contact: 4 pcs. (L size)	K1, K10, K21	Contact crimping tool A06B-6110-K220#D5L

(3) For αi PS

Category	Ordering number	Quantity	Use	Connection tool
Standard	A06B-6071-K203	Housing: 1 pcs./module Contact: 7 pcs.	K3, K6, K7	Contact crimping tool A06B-6110-K220#D3L
Standard	A06B-6130-K201	Housing: 1 pcs. Contact: 6 pcs.	K100	Contact crimping tool A06B-6110-K220#D2M

(4) For αi SV

Category	Ordering number	Quantity	Use	Connection tool
Standard	A06B-6078-K225	Case: 1 pcs. Connector: 1 pcs. Solder type	K22	
	A06B-6073-K216	Case: 2 pcs. Connector: 4 pcs.	K24,K25	Contact crimping tool A06B-6110-K220#D3L

(5) For αi SP

Category	Ordering number	Quantity	Use	Use
Standard	A06B-6078-K222	Case: 1 pcs. Connector: 1 pcs. Solder type	K14, K17, K71	
	A06B-6078-K223	Case: 1 pcs. Connector: 1 pcs. Crimp type	K12	Purchase a connector for F130-20S from Hirose Electric.
	A06B-6078-K224	Case: 1 pcs. Connector: 1 pcs. Solder type	K33	
	A06B-6078-K225	Case: 1 pcs. Connector: 1 pcs. Crimp type	K16	

NOTE
1 Some connectors are attached to a cable by crimping or soldering. Be careful when placing an order.
2 When attaching a connector of crimp type, use a dedicated tool prepared by each manufacturer. For the specifications of the tools, see the description of "Connection tools" below.

Connection tools

Connector connection tools are indicated below with their ordering numbers for purchase from FANUC. The connection tools can also be directly purchased from each manufacturer.

(a) Connectors manufactured by Tyco Electronics AMP
D-2100 series (for αi PS interface)

Category	Ordering number	Manufacturer part number	Use
Optional	A06B-6110-K220#D2M	91595-1	M size Contact crimping tool
Optional	A06B-6110-K220#D2R	1276716-1	Contact extractor

D-3000 series (for αi PS)

Category	Ordering number	Manufacturer part number	Use
Optional	A06B-6110-K220#D3L	91558-1	L size Contact crimping tool
Optional	A06B-6110-K220#D3R	234168-1	Contact extractor

D-5000 series (for power line)

Category	Ordering number	Manufacturer part number	Use
Optional	A06B-6110-K220#D5SS	91596-1	SS size Contact crimping tool
Optional	A06B-6110-K220#D5S	234170-1	S size Contact crimping tool
Optional	A06B-6110-K220#D5M	234171-1	M size Contact crimping tool
Optional	A06B-6110-K220#D5L	1366044-1	L size Contact crimping tool
Optional	A06B-6110-K220#D5R	409158-1	Contact extractor

(b) Half-pitch 20-pin press-mount connector of Hirose Electric (FI30-20S)

Name	Manufacturer part number
Jig for neat cabling	FI30-20CAT1
Jig for press-mounting	HHP-502, FI30-20GP

(c) Half-pitch 20-pin press-mount connector of Honda Tsushin Kogyo (PCR-E20FA)

Name	Manufacturer part number
Jig for neat cabling	JGPS-015-1/1-20, JGPS-014
Jig for press-mounting	MFC-K1, PCS-K1

Connector configuration

- Configuration of A06B-6110-K210

Connector name	Manufacturer	Part number	Quantity	Use	Dimensions
CXA2A	AMP Japan, Ltd.	1-1318119-4 (housing)	1	For αi PS	C(d)
CXA2B		131807-1 (contact)	8		-

- Configuration of A06B-6110-K211

Connector name	Manufacturer	Part number	Quantity	Use	Dimensions
CXA2A	AMP Japan, Ltd.	1-1318119-4 (housing)	1	For connection to separate battery	C(d)
CXA2B		131807-1 (contact)	2		-

- Configuration of A06B-6093-K303 (Connector with lock mechanism)

Connector name	Manufacturer	Part number	Quantity	Use	Dimensions
CX5X	Japan Aviation Electronics Industry, Ltd.	IL-L2S－S3L-B（N）	1	For connection to separate battery	C(d)
		IL-C2-1-00001	2		-

- Configuration of A06B-6110-K200#XXSS

Connector name	Manufacturer	Part number	Quantity	Use	Dimensions
CZ2	AMP Japan, Ltd.	1-917807-2 (housing)	1	For L-axis motor power	-
CZ2L		1318986-6 (contact)	4	Wire diameter: 0.75 mm^2 max.	-

- Configuration of A06B-6110-K200#XXS

Connector name	Manufacturer	Part number	Quantity	Use	Dimensions
CZ2	AMP Japan, Ltd.	1-917807-2 (housing)	1	For L-axis motor power	-
CZ2L		316040-6 (contact)	4	Wire diameter: 2.0mm^2 max	-

- Configuration of A06B-6110-K200#XXM

Connector name	Manufacturer	Part number	Quantity	Use	Dimensions
CZ1, CZ2	AMP Japan, Ltd.	1-917807-2 (housing)	1	For input power supply and L-axis motor power	-
CZ2L		316041-6 (contact)	4	Wire diameter: 5.5mm^2 max	-

- Configuration of A06B-6110-K200#XXL

Connector name	Manufacturer	Part number	Quantity	Use	Dimensions
CZ2	AMP Japan, Ltd.	1-917807-2 (housing)	1	For L-axis motor power	-
CZ2L		1318697-6 (contact)	4	Wire diameter: 8.0mm^2 max	-

- Configuration of A06B-6110-K201#XYSS

Connector name	Manufacturer	Part number	Quantity	Use	Dimensions
CZ2M	AMP Japan, Ltd.	3-917807-2 (housing)	1	For M-axis motor power	-
		1318986-6 (contact)	4	Wire diameter: 0.75 mm^2 max	-

- Configuration of A06B-6110-K201#XYS

Connector name	Manufacturer	Part number	Quantity	Use	Dimensions
CZ2M	AMP Japan, Ltd.	3-917807-2 (housing)	1	For M-axis motor power	-
		316040-6 (contact)	4	Wire diameter: 2.0mm^2 max	-

- Configuration of A06B-6110-K201#XYM

Connector name	Manufacturer	Part number	Quantity	Use	Dimensions
CZ2M	AMP Japan, Ltd.	3-917807-2 (housing)	1	For M-axis motor power	-
		316041-6 (contact)	4	Wire diameter: 5.5mm^2 max	-

- Configuration of A06B-6110-K201#XYL

Connector name	Manufacturer	Part number	Quantity	Use	Dimensions
CZ2M	AMP Japan, Ltd.	3-917807-2 (housing)	1	For M-axis motor power	-
		1318697-6 (contact)	4	Wire diameter: 8.0mm^2 max	-

- Configuration of A06B-6110-K202#YYSS

Connector name	Manufacturer	Part number	Quantity	Use	Dimensions
CZ2N	AMP Japan, Ltd.	2-917807-2 (housing)	1	For N-axis motor power	-
		1318986-6 (contact)	4	Wire diameter: 0.75 mm^2 max	-

- Configuration of A06B-6110-K202#YYS

Connector name	Manufacturer	Part number	Quantity	Use	Dimensions
CZ2N CZ3	AMP Japan, Ltd.	2-917807-2 (housing)	1	For N-axis motor power	-
		316040-6 (contact)	4	PSR regenerative resistor Wire diameter: 2.0mm^2 max	-

- Configuration of A06B-6110-K202#YYM

Connector name	Manufacturer	Part number	Quantity	Use	Dimensions
CZ2N	AMP Japan, Ltd.	2-917807-2 (housing)	1	For N-axis motor power	-
		316041-6 (contact)	4	Wire diameter: 5.5mm^2 max	-

- Configuration of A06B-6110-K202#YYL

Connector name	Manufacturer	Part number	Quantity	Use	Dimensions
CZ2N	AMP Japan, Ltd.	2-917807-2 (housing)	1	For N-axis motor power	-
		1318697-6 (contact)	4	Wire diameter: 8.0mm^2 max	-

- Configuration of A06B-6071-K203

Connector name	Manufacturer	Part number	Quantity	Use	Dimensions
CX1A	AMP Japan, Ltd.	1-178128-3 (housing)	1	For control, single-phase 200VAC input	C(a)
		1-175218-2 (contact)	3		C(c)
CX4	AMP Japan, Ltd.	1-178128-3 (housing)	1	For emergency stop signal	C(a)
		1-175218-2 (contact)	2		C(c)
CX3	AMP Japan, Ltd.	2-178128-3 (housing)	1	For ON/OFF control for external MCC	C(b)
		1-175218-2 (contact)	2		C(c)

- Configuration of A06B-6130-K201

Connector name	Manufacturer	Part number	Quantity	Use	Dimensions
CX37	AMP Japan, Ltd.	1-1318119-3 (housing)	1	For power failure detection output	-
		1318107-1 (contact)	6		-

- Configuration of A06B-6078-K225 (solder type, side cable type)

Connector name	Manufacturer	Part number	Quantity	Use	Dimensions
JFx	Hirose Electric Co., Ltd.	FI40B-2015S (connector)	1	For pulse coder	C(g)
		FI-20-CVS2 (case)	1		C(h)

- Configuration of A06B-6073-K216

Connector name	Manufacturer	Part number	Quantity	Use	Dimensions
CX8	AMP Japan, Ltd.	2-178128-3 (housing)	1	For DB interlock signals	C(b)
		1-175218-2 (contact)	2		C(c)
CX9	AMP Japan, Ltd.	1-178128-3 (housing)	1	For DB driving coil	C(a)
		1-175218-2 (contact)	2		C(c)

- Configuration of A06B-6078-K222 (solder type, side cable type)

Connector name	Manufacturer	Part number	Quantity	Use	Dimensions
JY1 JYA2 JYA3 JYA4	Hirose Electric Co., Ltd.	FI40B-20S (connector)	1	See below.	C(f)
		FI-20-CVS5 (case)	1		C(i)

Use αi M sensor, αi MZ sensor, αi BZ sensor, external one-rotation signal, speedometer, or analog override

- Configuration of A06B-6078-K223 (crimp type, side cable type)

Connector name	Manufacturer	Part number	Quantity	Use	Dimensions
JA7A	Hirose Electric Co., Ltd.	FI30-20S (connector)	1	See below.	C(e)
JA7B		FI-20-CVS2 (case)	1		C(h)

Use JA7A and JA7B : For communication between CNC and SP or SPC

- Configuration of A06B-6078-K224 (solder type, side cable type)

Connector name	Manufacturer	Part number	Quantity	Use	Dimensions
JA7A	Hirose Electric Co., Ltd.	FI40B-20S (connector)	1	See below.	C(f)
JA7B		FI-20-CVS2 (case)	1		C(h)

Use JY7B and JY7B : For communication between CNC and SP or SPC

- Configuration of A06B-6078-K225 (solder type, side cable type)

Connector name	Manufacturer	Part number	Quantity	Use	Dimensions
JYA3	Hirose Electric Co., Ltd.	FI40B-2015S (connector)	1	See below.	C(g)
JYA4		FI-2015-CVS (case)	1		C(j)

Use JYA3: For αi position coder
JYA4: For αi position coder S

3.1.3.6 Fuses

The ordering numbers of fuses used with each amplifier (αi PS, αi SV, αi SP) are indicated below.

(1) For control power supply for αi PS

Category	Ordering number	Remarks
Optional	A06B-6077-K250	Manufacturer: DAITO TSUSHIN KOGYO Ltd. Manufacturer part number : DM20, DM50 Specification : 2A/250V, 5A/250V Use : For short-circuit protection of 200VAC

(2) For control power supply for αi PS_R

Category	Ordering number	Remarks
Optional	A06B-6081-K250	Manufacturer: DAITO TSUSHIN KOGYO Ltd. Manufacturer part number : DM50 Specification : 5A/250V Use : For short-circuit protection of 200VAC

(3) For control power supply for αi SV and αi SP

Category	Ordering number	Remarks
Optional	A06B-6073-K250	Manufacturer: DAITO TSUSHIN KOGYO Ltd. Manufacturer part number : LM32C Specification : 3.2A/48V Use : For short-circuit protection of 24-VDC control power supply

NOTE
1 When a fuse blows, the control circuit may often be faulty. In such a case, replacing the fuse does not correct the trouble. Replace the amplifier.
2 A fuse is installed on the control board of an amplifier, but is not directly accessible for replacement from the outside. When replacing a fuse, extract the control board.

3.1.3.7 Power transformer

When an αi PS series of the 200V input series is used in an area where the input voltage is not within the range of 200 to 240VAC, a power transformer is required. The ordering drawing numbers and specifications of power transformers manufactured by FANUC are listed below. When other than a FANUC power transformers is to be prepared by the user, it must satisfy the transformer specifications indicated Section 2.1.

Ordering drawing numbers of power transformers manufactured by FANUC

Category	Ordering number	Name	Remarks
Optional	A80L-0024-0006	αi PS_R 3 (at 2kw output)	
	A80L-0024-0003	αi PS_R 3 (at 3kw output)	
	A06B-6052-J001	αi PS_R 5.5 (at 5.5kw output) αi PS 5.5	Primary 380/415/460VAC Secondary 200VAC
	A06B-6044-J006	αi PS_R 5.5 (at 7.5kw output) αi PS 11i	
	A06B-6044-J007	αi PS 15	
	A06B-6044-J010	αi PS 26, 30	
	A06B-6044-J015	αi PS 37 αi PS 55 (at 45kw output)	

Specifications of power transformers manufactured by FANUC

Power transformer for αi PS

Item \ Model	αi PS 5.5	αi PS 11	αi PS 15	αi PS 26, 30	αi PS 37 αi PS 55 (at 45kw output)
Ordering drawing number	A06B-6052-J001	A06B-6044-J006	A06B-6044-J007	A06B-6044-J010	A06B-6044-J015
FANUC drawing number	A80L-0001-0496	A80L-0001-0313	A80L-0001-0314	A80L-0001-0352	A80L-0001-0452
Rated capacity	10kVA	20kVA	30kVA	45kVA	64kVA
Rated primary voltage	380/415/460VAC 230VAC (The secondary is used as an autotransformer.) +10% -15%, 50/60±1Hz, 3φ				
Rated primary current	15A (at 380V)	30A (at 380V)	46A (at 380V)	68A (at 380V)	97A (at 380V)
	14A (at 415V)	28A (at 415V)	42A (at 415V)	63A (at 415V)	89A (at 415V)
	13A (at 460V)	25A (at 460V)	38A (at 460V)	56A (at 460V)	80A (at 460V)
Rated secondary voltage	200/220/230VAC				
Rated primary current	29A	58A	87A	130A	185A
Voltage regulation at the secondary	5%				
Voltage deviation at the secondary	±3%				
Connection	Y-Y connection				
Insulation	Class H (maximum allowable temperature : 180°C)				
Ambient temperature	0 to 45°C				
Allowable temperature rise	135deg				
Relative humidity	Max. 95%RH				
Type	Dry type, natural air cooling type				
Dielectric withstand voltage	2000VAC, for 1 minute				
Weight	Max. 61kg	Max. 115kg	Max. 165kg	Max. 260kg	Max. 375kg
Outline drawing	Fig.8.1.4(a)	Fig.8.1.4(b)	Fig.8.1.4(c)	Fig.8.1.4(d)	Fig.8.1.4(e)
Connection diagram	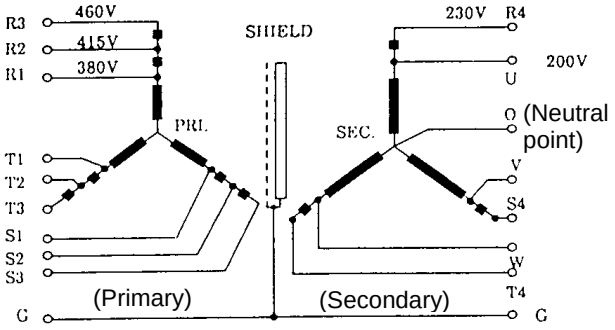				

Power transformer for αi PS_R

Item \ Model	αi PS_R 3 (at 2kw output)	αi PS_R 3 (at 3kw output)	αi PS_R 5.5 (at 5.5kw output)	αi PS_R 5.5 (at 7.5kw output)
Ordering drawing number	A80L-0024-0006	A80L-0026-0003	A06B-6052-J001	A06B-6044-J006
FANUC drawing number	A80L-0024-0006	A80L-0026-0003	A80L-0001-0496	A80L-0001-0313
Rated capacity	3.5kVA	5kVA	10kVA	20kVA
Rated primary voltage	200/220/230/240VAC , Δ connection 380/415/460/480/550VAC , Y connection ±15%, 50/60Hz±2Hz, 3ϕ		380/415/460VAC 230VAC(The secondary is used as an autotransformer.) +10% -15%, 50/60±1Hz, 3ϕ	
Rated primary current			15A (at 380V)	30A (at 380V)
	5.3A (at 380V)	7.6A (at 380V)	14A (at 415V)	28A (at 415V)
			13A (at 460V)	25A (at 460V)
Rated secondary voltage	210VAC		200VAC	
Rated primary current	9.6A	13.7A	29A	58A
Voltage regulation at the secondary	2%		5%	
Voltage deviation at the secondary	±3%			
Connection	Δ-Δ connection or Y-Δ connection		Y-Y connection	
Insulation	Class B (maximum allowable temperature: 130°C)		Class H (maximum allowable temperature: 180°C)	
Ambient temperature	-20 to 55°C		0 to 45°C	
Allowable temperature rise	135deg			
Thermostat	B contact (operating temperature: 135°C)		None	
Relative humidity	Max. 95%RH			
Type	Dry type, natural air cooling type			
Dielectric withstand voltage	2300VAC, for 1 minute		2000VAC, for 1 minute	
Weight	Max. 27kg	Max. 36kg	Max. 61kg	Max. 115kg
Outline drawing	Fig.8.1.5(e)	Fig.8.1.5(e)	Fig.8.1.5(a)	Fig.8.1.5(b)
Connection diagram	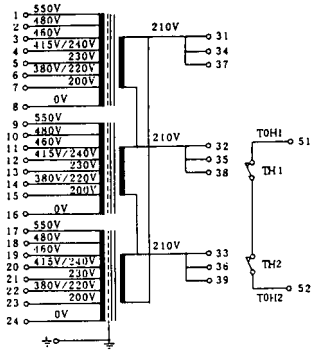		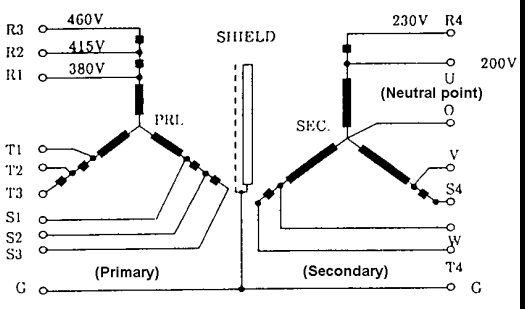	

Connecting a power transformer

Power transformers must be set according to the supply voltage used.

(a) Connection points of power transformers for αi PS 5.5, αi PS 11, αi PS 15, αi PS 26, αi PS 30, and αi PS 37

Supply voltage	Connection points at the primary	Remarks
380 VAC	R - R1, S - S1, T - T1 (380-V tap)	
400 VAC	R - R1, S - S1, T - T1 (380-V tap)	
415 VAC	R - R2, S - S2, T - T2 (415-V tap)	
440 VAC	R - R2, S - S2, T - T2 (415-V tap)	
460 VAC	R - R3, S - S3, T - T3 (460-V tap)	
480 VAC	R - R3, S - S3, T - T3 (460-V tap)	

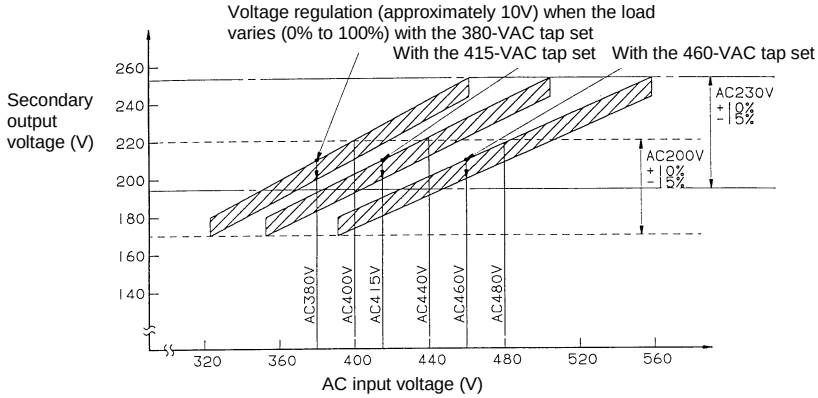

⚠ CAUTION

1 When installing a transformer in a cabinet, be careful to ensure that the transformer does not thermally affect other equipment. For example, separate the transformer from the other equipment.
2 When installing a transformer outside the cabinet, make sure that the transformer is not directly exposed to cutting chips or coolant.
3 If there is a possibility of the transformer falling, secure the transformer with bolts or similar.

3.1.3.8 Regenerative discharge unit

Whenever a αi PS_R (resistance regeneration type Common Power Supply) is used, a regenerative discharge unit must be specified. For how to select the regenerative discharge unit, see Subsection 4.4.4.

Category	Name	Ordering number	Remarks
Standard	αi PS_R 3	A06B-6089-H510	16Ω/100W (at natural cooling)
	αi PS_R 3, 5.5	A06B-6089-H500	16Ω/200W (at natural cooling)
		A06B-6089-H713	16Ω/800W (forced cooling fan motor is included)
	αi PS_R 5.5	A06B-6089-H711	8Ω/800W (forced cooling fan motor is included)
		A06B-6089-H712	8Ω/1200W (forced cooling fan motor is included)

See Subsection 8.1.5, "Selecting a Regenerative Discharge Unit" for details of selection.

3.1.3.9 Cables

DC link short bar

Category	Ordering number	Applicable terminal-to-terminal distance
Optional	A06B-6078-K801	90mm (86mm - 94mm)
	A06B-6078-K803	64mm (60mm - 68mm)
	A06B-6078-K840	154mm (150mm - 158mm)
	A06B-6078-K841	300mm (298mm - 302mm)
	A06B-6078-K842	150mm (146mm - 154mm)

See 9.3.1.2 for details.
A06B-6078-K842 is used to connect between a 150-mm wide amplifier (left) and a 300-mm wide amplifier (right).

Cables for connection of amplifiers

Category	Ordering number	Cable length	Applicable amplifier width
Optional	A06B-6110-K801	200mm	150mm width amplifier
	A06B-6110-K802	150mm	90mm width amplifier
	A06B-6110-K803	100mm	60mm width amplifier
	A06B-6110-K804	400mm	300mm width amplifier

NOTE
1 The above table lists the cable for each interface between amplifiers.
For connection of CXA2A and CXA2B
2 The connection cable for the battery of the absolute pulse coder is not included in the cables shown above. For details, see Subsection 9.3.1.10.

Cables for connection of detectors

Category	Ordering number	Use	Remarks
Optional	A06B-6078-K811	For αiM sensor, αiMZ sensor	Cable length : 7m
	A06B-6078-K814	For αi Positioncoder	Cable length : 7m Connector figure : Straight
	A06B-6078-K815		Cable length : 7m Connector figure : Elbow

Cables for FSSB interface

Category	Ordering number	Cable length	Applicable amplifier width
Optional	A66L-6001-0023#L150R0	15cm	For between αi SV and αi SV
	A66L-6001-0023#L300R0	30cm	

3.1.3.10 Circuit breaker and magnetic contactor

The circuit breaker and magnetic contactor capacities are determined by the Common Power Supply specifications. The ordering drawing numbers and specifications of the circuit breakers and magnetic contactors are shown below.
When this equipment is to be prepared by the user, it must satisfy the circuit breaker and magnetic contactor specifications indicated below.

Circuit breaker and magnetic contactor specifications

For αi PS and αi PS_R

PS name	Circuit breaker 1	Circuit breaker 2	Magnetic contactor	Remarks
αi PS_R 3	20A	5A	20A	
αi PS_R 5.5	30A		30A	Note 4)
	50A		50A	Note 5)
αi PS 5.5	30A to 50A		30A	
αi PS 11	55A to 75A		55A	
αi PS 15	70A to 100A		70A	
αi PS 26	120A to 150A		120A	
αi PS 30	140A to 200A		140A	
αi PS 37	175A to to 225A		175A	
αi PS 55	250A		250A	

NOTE
1 For the installation positions of the circuit breakers and magnetic contactor, see Section 1.2.
2 Set the rated voltage of circuit breakers 1 and 2 according to the power supply voltage.
3 The current and voltage of the operation coil of the magnetic contactor must be within the rating of the internal contact [CX3 (MCC)] of the αi PS.
For details, see Subsection 9.3.1.5.
4 When the αi PS_R 5.5 is used at a rated output capacity of 5.5 kW
5 When the αi PS_R 5.5 is used at a rated output capacity of 7.5 kW
6 When the circuit breaker trips, the contact of the magnetic contactor may be melted. Therefore, before turning on the circuit breaker again, check to make sure that the contact of the magnetic contactor is not melted.

For 400-V input series of αi PS

PS name	Circuit breaker 1	Circuit breaker 2	Circuit breaker 3	Magnetic contactor	Remarks
αi PS 11HV	30A	3A	3A	30A	
αi PS 18HV	45A			45A	
αi PS 30HV	75A			75A	
αi PS 45HV	125A			125A	
αi PS 75HV	200A			200A	
αi PS 100HV	250A			250A	

NOTE

1 For the installation positions of the circuit breakers and magnetic contactor, see Section 1.2.
2 Set the rated voltage of circuit breakers 1 and 2 according to the power supply voltage.
3 The current and voltage of the operation coil of the magnetic contactor must be within the rating of the internal contact [CX3 (MCC)] of the αi PS. For details, see Subsection 9.3.1.5.
4 When the circuit breaker trips, the contact of the magnetic contactor may be melted. Therefore, before turning on the circuit breaker again, check to make sure that the contact of the magnetic contactor is not melted.

Ordering drawing numbers of circuit breakers

Category	Model	Ordering number	Outline drawing	Circuit breaker specification	Circuit breaker cover specification
Optional	αi PS_R 3 αi PS 11HV	A06B-6077-K101	8.1.7(a)	Fuji Electric EA53C/30	Fuji Electric BZ6TBH10C3
	αi PS_R 5.5 αi PS 5.5 αi PS 18HV	A06B-6077-K102	8.1.7(b)	Fuji Electric EA103C/50	Fuji Electric BZ6TBH10C3
	αi PS 11	A06B-6077-K103	8.1.7(c)	Fuji Electric EA103C/60	Fuji Electric BZ6TBH10C3
	αi PS 15, 30HV	A06B-6077-K104	8.1.7(d)	Fuji Electric EA103C/75	Fuji Electric BZ6TBH10C3
	αi PS 45HV	A06B-6077-K108	8.1.7(e)	Fuji Electric EA203B/125	Fuji Electric BZ-TB40B
	αi PS 26, 30	A06B-6077-K105	8.1.7(f)	Fuji Electric EA203B/150	Fuji Electric BZ-TB40B
	αi PS 37	A06B-6077-K110	8.1.7(g)	Fuji Electric EA203B/175	Fuji Electric BZ-TB40B
	αi PS 75HV	A06B-6077-K109	8.1.7(h)	Fuji Electric EA203B/200	Fuji Electric BZ-TB40B
	αi PS 55, 100HV	A06B-6077-K111	8.1.7(i)	Fuji Electric EA403B/250	Fuji Electric BZ-TB60B
	For control power	A06B-6077-K106	8.1.7(j)	Fuji Electric EA33AC/5	Fuji Electric BZ6TBH10C3

Ordering drawing numbers of magnetic contactors

Category	Model	Ordering number	Outline drawing	Magnetic contactor specification	Magnetic contactor cover specification
Optional	αi PS_R 3 , αi PS 11HV	A06B-6077-K121	8.1.7(a)	Fuji Electric SC-5-1	Fuji Electric SZ-JC4
	αi PS_R 5.5, αi PS 5.5 αi PS 18HV	A06B-6077-K122	8.1.7(b)	Fuji Electric SC-N1	Fuji Electric SZ-N1J
	αi PS 11	A06B-6077-K123	8.1.7(b)	Fuji Electric SC-N2	Fuji Electric SZ-N1J
	αi PS 15, 30HV	A06B-6077-K124	8.1.7(c)	Fuji Electric SC-N2S	Fuji Electric SZ-N2SJ
	αi PS 26, 45HV	A06B-6077-K125	8.1.7(d)	Fuji Electric SC-N4	Fuji Electric SZ-N4J
	αi PS 30	A06B-6077-K126	8.1.7(e)	Fuji Electric SC-N5	Fuji Electric SZ-N4J
	αi PS 37, 75HV	A06B-6077-K128	8.1.7(f)	Fuji Electric SC-N7	Fuji Electric SZ-N7J
	αi PS 55, 100HV	A06B-6077-K127	8.1.7(g)	Fuji Electric SC-N8	Fuji Electric SZ-N8J

NOTE
The coil voltage specification of the magnetic contactor is 200VAC.

3.1.3.11 Lightning surge protector

To protect equipment from surge voltages caused by lightning, install a lightning surge protector between lines and between a line and ground. For how to install protectors, see Appendix A.

Lightning surge protector specifications

Category	Ordering number	Specification	Outline drawing	Remarks
Optional	A06B-6077-K142	For line-to-line installation : RAV-781BYZ-2 For line-to-ground installation : RAV-781BXZ-4	8.1.9(a)	Manufactured by Okaya Electric Industries Co., Ltd. For 200VAC line TÜV approved products
	A06B-6077-K143	For line-to-line installation : RAV-152BYZ-2A For line-to-ground installation : RAV-801BXZ-4	8.1.9(b)	Manufactured by Okaya Electric Industries Co., Ltd. For 400VAC line TÜV approved products
	A06B-6077-K144	Integration type for line-to-line installation/line-to-ground installation: RCM-601BUZ-4	8.1.9(c)	Manufactured by Okaya Electric Industries Co., Ltd. For 200VAC line TÜV approved products

* The line-to-line or line-to-ground installation type (A06B-6077-K144) and the integration type (A06B-6077-K142) are equivalent in performance and specifications.

3.1.3.12 Noise filter

A noise filter must be installed in the PS input section to satisfy the requirements of the EMC Directives which are now being enforced in the EU countries.

Category	Model	Ordering number	Outline drawing	Rated output	Specification
Optional	αi PS_R 3 PS 5.5i	A06B-6077-K155	8.1.10	30A	3SUP-HL30-ER-6: Okaya Electric Industries Co., Ltd.
	αi PS_R 5.5 αi PS 11 ,15	A06B-6077-K156		75A	3SUP-HL75-ER-6: Okaya Electric Industries Co., Ltd.
	αi PS 26, 30	A06B-6077-K157		150A	3SUP-HL150-ER-6: Okaya Electric Industries Co., Ltd.
	αi PS 37	A06B-6077-K158		200A	3SUP-HL200-ER-6: Okaya Electric Industries Co., Ltd.

Category	Model	Ordering number	Outline drawing	Rated output	Specification
Optional	αi PS_R 3 αi PS 5.5, 11HV	A06B-6110-K160	8.1.10	50A	NF3050C-VQ: Soshin Electric Co., Ltd.
	αi PS_R 5.5 αi PS 11 ,15 αi PS 18HV, 30HV	A06B-6110-K161		80A	NF3080C-VQ: Soshin Electric Co., Ltd.
	αi PS 26, 30 αi PS 45HV	A06B-6110-K162		150A	NF3150C-VQ: Soshin Electric Co., Ltd.
	αi PS 37 αi PS 75HV	A06B-6110-K163		200A	NF3200C-VQ:Soshin Electric Co., Ltd.
	αi PS 55 αi PS 100HV	A06B-6110-K164		250A	NF3250C-VQ:Soshin Electric Co., Ltd.

NOTE
1 A06B-6110-K160 to A06B-6110-K164 (manufactured by Soshin Electric Co., Ltd.) are high leakage type filters for neutral grounding. They are not used for purposes other than neutral grounding.
2 The above models are listed as guidelines for selection. Load currents of the CNC, amplifier, and other devices flow through the noise filter. Obtain these load currents, and select a noise filter so that the obtained load currents do not exceed the rated current of the noise filter.

3.1.3.13 Sensors for servo

αi CZ sensor (separate detector)

Category	Name	Ordering number	Remarks
Optional	αi CZ sensor 512AS	A860-2164-T411	512 teeth / 15,000min^{-1}
	αi CZ sensor 768AS	A860-2164-T511	768 teeth / 10,000min^{-1}
	αi CZ sensor 1024AS	A860-2164-T611	1024 teeth / 8,000min^{-1}

3.1.3.14 Sensors for spindle

αi Positioncoder

Category	Name	Ordering number	Remarks
Optional	αi Positioncoder	A860-2109-T302	□68, 10,000min^{-1}
	Connector kit	A06B-6088-K211	Straight type

αPositioncoder S (analog output type)

Category	Name	Ordering number	Remarks
Optional	αPositioncoder S	A860-0309-T352	□68, 10,000min^{-1}
	Connector kit	A06B-6088-K211	Straight type

αi BZ sensor (compact type)

Name	Ordering number		Remarks			
			Num-ber of teeth	Maximum speed	Detection ring	
	Waterproof connector specification	Non-waterproof connector specification			Inner diameter	Outer diameter
αi BZ sensor 128	A860-2150-T201	A860-2155-T201	128	20,000min^{-1}	ϕ40	ϕ52
αi BZ sensor 128H	A860-2150-T211	A860-2155-T211		70,000min^{-1}		
αi BZ sensor 192	A860-2150-T301	A860-2155-T301	192	20,000min^{-1}	ϕ60	ϕ77.6
αi BZ sensor 192H	A860-2150-T311	A860-2155-T311		40,000min^{-1}		
αi BZ sensor 256	A860-2150-T401	A860-2155-T401	256	15,000min^{-1}	ϕ82	ϕ103.2
αi BZ sensor 256S	A860-2150-T404	A860-2155-T404			ϕ88	
αi BZ sensor 256H	A860-2150-T411	A860-2155-T411		30,000min^{-1}	ϕ82	
αi BZ sensor 384	A860-2150-T511	A860-2155-T511	384	15,000min^{-1}	ϕ125	ϕ154.4
αi BZ sensor 512	A860-2150-T611	A860-2155-T611	512	10,000min^{-1}	ϕ160	ϕ205.6

αi CZ sensor (for built-in spindle motor *1)

Category	Name	Ordering number	Remarks
Optional	αi CZ sensor 512 I	A860-2161-T411	512 teeth / 15,000min^{-1}
	αi CZ sensor 768 I	A860-2161-T511	768 teeth / 10,000min^{-1}
	αi CZ sensor 1024 I	A860-2161-T611	1024 teeth / 8,000min^{-1}

αi CZ sensor (for spindle *1)

Category	Name	Ordering number	Remarks
Optional	αi CZ sensor 512 IS	A860-2163-T411	512 teeth / 15,000min^{-1}
	αi CZ sensor 768 IS	A860-2163-T511	768 teeth / 10,000min^{-1}
	αi CZ sensor 1024 IS	A860-2163-T611	1024 teeth / 8,000min^{-1}

NOTE
*1 This αi CZ sensor is of the serial interface type.
It is supported by the following αi SP units
(manufactured in May 2007 and later):
Supported unit version: B and later
200-V input series : A06B-6141-H002, H006, H011, H015, H030, H037, H055#H580
400-V input series : A06B-6151-H006, H011, H015, H045, H075, H100#H580
Supported unit version: C and later
200-V input series : A06B-6141-H022, H026, H045#H580
400-V input series : A06B-6151-H030#H580

3.1.3.15 Power line switch unit

Spindle switch control (Y/Y switch type)
Output switch control (Y/Y switch type, Y/Δ switch type)

Category	Name	Ordering number	Remarks
Optional	Y/Y switch type	A06B-6078-K034	(Note)
	Y/Δ switch type	A06B-6078-K035	(Note)
	Y/Y switch type	A06B-6078-K036	(Note)
	Y/Δ switch type	A06B-6078-K037	(Note)

NOTE
Select one type depending on the peak rated current of a spindle motor to be applied.
For details, see Subsection 10.2.3.

3.1.3.16 Battery for absolute Pulsecoder

For connection of a battery for an absolute Pulsecoder, two methods are available. For each method, options are available.

NOTE
1 A battery needs to be maintained periodically. So, [connection type 1] is recommended because this type uses a battery (consisting of four size D alkaline cells) easily obtainable from the market.
2 A built-in battery used with [connection type 2] is not available on the market, but needs to be purchased from FANUC. So, it is recommended to purchase spare built-in batteries.

[Connection type 1]

Power is fed from one battery to multiple αi SV models.
(See Subsection 9.3.1.10.)

Category	Ordering number	Name	Remarks
Optional	A06B-6050-K061	Battery	Four pieces of size D battery
	A06B-6050-K060	Battery case	
	A06B-6110-K211	Battery connection connector	

[Connection type 2]

A battery is built into each αi SV.
(See Subsection 9.3.2.10.)

Category	Ordering number	Name	Remarks
Optional	A06B-6114-K504	Built-in battery	Lithium battery
Optional	A06B-6114-K505	Battery case	For αi SV 60/90 mm wide
Optional	A06B-6114-K506	Battery case	For αi SV 150/300 mm wide αi SV 360 αi SV 180HV αi SV 360HV

4 HOW TO SELECT THE MODULE

Chapter 4, "HOW TO SELECT THE MODULE", consists of the following sections:

4.1 HOW TO SELECT THE αi SV series (SERVO AMPLIFIER) 80
4.2 HOW TO SELECT THE αi SP series (SPINDLE AMPLIFIER) 84
4.3 HOW TO SELECT THE αi PS (POWER SUPPLY) 86
4.4 HOW TO SELECT THE αi PS_R series (POWER SUPPLY, RESISTANCE REGENERATION TYPE) 90
4.5 LIST OF MOTOR OUTPUT CAPACITIES FOR αi PS AND αi PS_R SERIES SELECTION 96

4.1 HOW TO SELECT THE αi SV SERIES (SERVO AMPLIFIER)

Select an appropriate αi SV module for the selected servo motor.

Table 4.1(a) Specification

No	Specification	Number of connected axes	Input voltage	Interface with CNC
1	A06B-6117-H1xx	1	200V	FSSB
2	A06B-6117-H2xx	2	200V	FSSB
3	A06B-6117-H3xx	3	200V	FSSB
4	A06B-6127-H1xx	1	400V	FSSB
5	A06B-6127-H2xx	2	400V	FSSB

4.1.1 200-V Input Series

Amplifier model 200V type		Motor model HRV2/3	HRV4	Outline	Group A	Group B	Group C	Group D	Group E	Group F	Group G	Group H
1-axis	αi SV 4	○	○	TYPE I	○							
	αi SV 20	○	-			○						
	αi SV 20L	○	○	TYPE II		○						
	αi SV 40	○	-				○					
	αi SV 40L	○	○				○					
	αi SV 80	○	-					○				
	αi SV 80L	○	○					○				
	αi SV 160	○	-						○	○		
	αi SV 160L	○	○	TYPE III					○	○		
	αi SV 360	○	○	TYPE IV							○	○ (*2)
2-axes	αi SV 4/4	○	○	TYPE I	L/M							
	αi SV 4/20	○	-		L	M						
	αi SV 20/20	○	-			L/M						
	αi SV 20/20L	○	○	TYPE II		L/M						
	αi SV 20/40	○	-			L	M					
	αi SV 20/40L	○	○			L	M					
	αi SV 40/40	○	-				L/M					
	αi SV 40/40L	○	○				L/M					
	αi SV 40/80	○	-				L	M				
	αi SV 40/80L	○	○	TYPE III			L	M				
	αi SV 80/80	○	-	TYPE II				L/M				
	αi SV 80/80L	○	○	TYPE III				L/M				
	αi SV 80/160	○	-					L	M			
	αi SV 160/160	○	-						L/M			
3-axes	αi SV 4/4/4	○	-	TYPE I	L/M/N							
	αi SV 20/20/20	○	-			L/M/N						
	αi SV 20/20/40	○	-	TYPE II		L/M	N					

*1) “SV” of αi SV means “SerVo”.

*2) Two servo amplifiers are necessary to drive one motor.

group A: βiS 0.2/5000, βiS 0.3/5000

group B: αiS 2/5000, αiS 2/6000, αiS 4/5000, αiF 1/5000, αiF 2/5000
βiS 0.4/5000, βiS 0.5/6000, βiS 1/6000, βiS 2/4000, βiS 4/4000, βiS 8/3000, βiS 12/2000

group C: αiF 4/4000, αiF 8/3000, βi S 12/3000, βi S 22/2000

group D: αiS 8/4000, αiS 8/6000, αiS 12/4000, αiF 12/3000, αiF 22/3000

group E: αiS 22/4000, αiS 30/4000, αiS 40/4000, αiF 30/3000, αiF 40/3000

group F: αiS 22/4000, αiS 30/4000, αiS 40/4000, αiF 30/3000, αiF 40/3000, αiF 40/3000 with fan

group G: αiS 50/3000 with fan, αiS 100/2500, αiS 200/2500

group H: αiS 300/2000, αiS 500/2000

4.1.2 400-V Input Series

Amplifier model 400V type		Motor model HRV2/3	HRV4	Outline	Group A	Group B	Group C	Group D	Group E	Group F	Group G
1-axis	αi SV 10HV	○	-	TYPE I	○						
	αi SV 10HVL	○	○	TYPE II	○						
	αi SV 20HV	○	-			○					
	αi SV 20HVL	○	○			○					
	αi SV 40HV	○	-				○				
	αi SV 40HVL	○	○				○				
	αi SV 80HV	○	-					○			
	αi SV 80HVL	○	○	TYPE III				○			
	αi SV 180HV	○	○	TYPE IV					○		
	αi SV 360HV	○	○	TYPE V						○	○ (*2)
2-axes	αi SV 10/10HV	○	-	TYPE I	L/M						
	αi SV 10/10HVL	○	○	TYPE II	L/M						
	αi SV 20/20HV	○	-			L/M					
	αi SV 20/20HVL	○	○	TYPE III		L/M					
	αi SV 20/40HV	○	-			L	M				
	αi SV 20/40HVL	○	○			L	M				
	αi SV 40/40HV	○	-				L/M				
	αi SV 40/40HVL	○	○				L/M				
	αi SV 40/80HV	○	-				L	M			
	αi SV 80/80HV	○	-					L/M			

*1) “SV” of αi SV means “SerVo”.

*2) Two servo amplifiers are necessary to drive one motor.

group A: αiS 2/5000HV, αiS 2/6000HV, αiS 4/5000HV, βiS 2/4000HV, βiS 4/4000HV, βiS 8/3000HV

group B: αiF 4/4000HV, αiF 8/3000HV, βi S 12/3000HV, βiS 22/2000HV

group C: αiS 8/4000HV, αiS 8/6000HV, αiS 12/4000HV, αiF 12/3000HV, αiF 22/3000HV

group D: αiS 22/4000HV, αiS3 0/4000HV, αiS 40/4000HV

group E: αiS 50/3000HV with fan, αiS 100/2500HV, αiS 200/2500HV

group F: αiS 300/2000HV, αiS 500/2000HV

group G: αiS 1000/2000HV

4.1.3 How to Select the Dynamic Brake Module (DBM)

When the αi SV 360, αi SV 180HV, or αi SV 360HV is used, an external dynamic brake module (DBM) is required. This module stops the motor immediately at, for example, emergency stop time. The other αi SV models include a feature similar to this module.
Select a dynamic brake module based on the following table:

Dynamic brake module

Category	Ordering number	Name	Remarks
Standard	A06B-6079-H401	DBM	αi SV 360, αi SV 180HV αi SV 360HV
	A06B-6069-H300	DBM	αi SV 360HV (*1)

The dynamic brake module (DBM) is designed based on the energy required to stop the motor rotating at its maximum speed when the load inertia is five times as large as the motor inertia. When this operating condition is exceeded, contact FANUC.

(*1) When the αiS 1000HV, αiS 2000HV, or αiS S3000HV is driven

4.2 HOW TO SELECT THE αi SP series(SPINDLE AMPLIFIER)

Select an appropriate αi SP series for the selected spindle motor.
αi SP series amplifiers and standard motors that can be used together are shown below. When using a built-in motor or a motor with special specifications, refer to relevant specifications, and select an αi SP series accordingly.

Table 4.2(a) Specification

No	Ordering number	Input voltage	Remarks
1	A06B-6141-Hxxx#H580	200V	TYPE A
2	A06B-6142-Hxxx#H580	200V	TYPE B
3	A06B-6151-Hxxx#H580	400V	TYPE A
4	A06B-6152-Hxxx#H580	400V	TYPE B

4.2.1 200-V Input Series

Amplifier model 200V type	Outline	Motor model
αi SP 2.2	TYPE II	αi I 0.5/10000, αi I 1/10000
Sαi P 5.5		αi I 1.5/10000, αi I 2/10000, αi I 3/10000, αi I 1/15000
αi SP 11	TYPE III	αi I 6/10000, αi I 8/8000, αi I 3/12000, αi I 6/12000, αi I 8/10000, αi I_P 12/6000, αi I_P 12/8000, αi I_T 3/12000
αi SP 15		αi I 12/7000, αi I 1.5/20000, αi I 12/12000, αi I_P 15/6000, αi I_P 15/8000, αi I_P 18/6000, αi I_P 18/8000, αi I_T 1.5/20000, αi I_T 6/12000, αi I_T 8/12000
αi SP 22	TYPE IV	αi I 15/7000, αi I 18/7000, αi I 2/20000, αi I 15/12000, αi I 18/12000, αi I_P 22/6000, αi I_P 22/8000, αi I_P 30/6000, αi I_T 2/20000
αi SP 26		αi I 22/7000, αi I 22/12000, αi I_P 40/6000, αi I_P 50/6000, αi I_T 22/10000
αi SP 30		αi I_P 60/4500, αi I_T 15/15000, αi I_L 8/20000, αi I_L 15/15000, αi I_L
αi SP 37		(*4)
αi SP 45	TYPE V	αi I 30/6000, αi I 40/6000
αi SP 55		αi I 50/4500

*3) “SP” of αi SP means “SPindle”.

*4) These amplifieres drives Built-in Spindle Motor series.

4.2.2 400-V Input Series

Amplifier model 400V type	Outline	Motor model
αi SP 5.5HV	TYPE II	αi I 0.5/10000HV, αi I 1/10000HV, αi I 1.5/10000HV, αi I 2/10000HV, αi I 3/10000HV
αi SP 11HV	TYPE III	αi I 6/10000HV, αi I 8/8000HV
αi SP 15HV		αi I 12/7000HV, αi I_P 15/6000HV, αi I_P 15/8000HV, αi I_T 1.5/20000HV, αi I_T 6/12000HV, αi I_T 8/12000HV
αi SP 30HV	TYPE IV	αi I 15/7000HV, αi I 22/7000HV, αi I_P 22/6000HV, αi I_P 22/8000HV, αi I_P 40/6000HV, αi I_P 50/6000HV, αi I_P 60/4500HV, αi I_T 2/20000HV, αi I_T 15/15000HV, αi I_T 22/10000HV
αi SP 45HV		αi I 30/6000HV, αi I 40/6000HV, αi I_L 8/20000HV, αi I_L 15/15000HV, αi I_L 26/15000HV
αi SP 75HV	TYPE V	αi I 60/4500HV, αi I 100/4000HV
αi SP 100HV		*4

*3) “SP” of αi SP means “SPindle”.

*4) These amplifieres drives Built-in Spindle Motor series.

4.3 HOW TO SELECT THE αi PS series (POWER SUPPLY)

When Power Supply is selected, the conditions described in this section must all be satisfied.

Calculate the required rated output capacity, maximum output capacity, and peak output capacity using the calculation methods in Subsections 4.3.1, 4.3.2, and 4.3.3 and then select an αi PS model that meets all the conditions.

Table 4.2(a) 200-V input

Item \ Model	αi PS 5.5	αi PS 11	αi PS 15	αi PS 26	αi PS 30	αi PS 37	αi PS 55
Rated output capability	5.5kW	11kW	15kW	26kW	30kW	37kW	55kW
Maximum output capability	13kW	24kW	34kW	48kW	64kW	84kW	125kW
Peak output capability	22kW	38kW	51kW	73kW	85kW	106kW	192kW

Table 4.2(b) 400-V input

Item \ Model	αi PS 11HV	αi PS 18HV	αi PS 30HV	αi PS 45HV	αi PS 75HV	αi PS 100HV
Rated output capability	11kW	18kW	30Kw	45kW	75kW	100kW
Maximum output capability	24kW	42kW	72kW	102kW	144kW	180kW
Peak output capability	38kW	64kW	96kW	137kW	193kW	220kW

NOTE
The above tables apply to A06B-6140-Hxxx and A06B-6150-Hxxxx. For A06B-6110-Hxxx and A06B-6120-Hxxxx, the maximum output capability and peak output capability values differ as shown in the tables below.

200-V input (for A06B-6110-Hxxx)

Item \ Model	αi PS 5.5	αi PS 11	αi PS 15	αi PS 26	αi PS 30	αi PS 37	αi PS 55
Rated output capability	5.5kW	11kW	15kW	26kW	30kW	37kW	55kW
Maximum output capability	11kW	20kW	28kW	40kW	53kW	70kW	104kW
Peak output capability	20kW	34kW	46kW	66kW	77kW	96kW	174kW

400-V input (for A06B-6120-Hxxx)

Item \ Model	αi PS 11HV	αi PS 18HV	αi PS 30HV	αi PS 45HV	αi PS 75HV	αi PS 100HV
Rated output capability	11kW	18kW	30kW	45kW	75kW	100kW
Maximum output capability	20kW	35kW	60kW	85kW	120kW	150kW
Peak output capability	34kW	58kW	87kW	124kW	175kW	200kW

4.3.1 How to Obtain the αi PS series rated output capability

Select an αi PS with a rated output not less than the sum of the total continuous rated output of the spindle motors times 1.15, plus the total continuous rated output of the servo motors times 0.6.

Rated output capacity of αi PS ≥ Σ Continuous rated output of spindle motor × 1.15 +Σ Continuous rated output of servo motor × 0.6

When only αi SP is to be connected to Power Supply module, select the αi PS so that the 30-minute rated output of the spindle motor does not exceed the rated output capacity of Power Supply module.

Rated output capacity of an αi PS ≥ 30-minute rated output of a spindle motor

Table 4.3 lists the rated output capacities of the αi PS models. Tables 4.5.1(a) to (d) list the continuous rated outputs of the servo motors. Tables 4.5.2(a) and (b) list the continuous rated outputs or 30-minute rated output of the spindle motors.

4.3.2 How to Obtain the αi PS series maximum output capability

Select the αi PS whose maximum output capability will not be exceeded by the total of the sum of the maximum acceleration spindle motor outputs and the sum of the maximum acceleration outputs of the servo motors that are accelerated simultaneously and whose acceleration time exceeds 0.3 seconds.

Maximum output of αi PS ≥ Σ Accelerating maximum output of spindle motor + ∑Maximum acceleration-time outputs of servo motors whose acceleration time exceeds **0.3 seconds** (on simultaneous acceleration/deceleration axis)

Table 4.3 lists the maximum output capacities of the αi PS models. Tables 4.5.1(a) to (d) list the accelerating maximum outputs of the servo motors. Tables 4.5.2(a) and (b) list the accelerating maximum outputs of the spindle motors.

4.3.3 How to Obtain the αi PS series peak maximum output capability

Make selection so that a total of maximum acceleration-time outputs of the spindle motors plus a total of maximum acceleration-time outputs of the servo motors that are accelerated concurrently for 0.3 seconds or less are equal to or less than the peak maximum output capacity of the αi PS.

Power Supply peak maximum output capability
≥ Σ spindle motor maximum acceleration outputs
+ ∑Maximum acceleration-time outputs of servo motors whose acceleration time is **0.3 seconds** or less
(on simultaneously accelerated axes)

Table 4.3 lists the peak output capacities of the αi PS models. Tables 4.5.1(a) to (d) list the continuous rated outputs of the servo motors. Tables 4.5.2(a) and (b) list the according maximum outputs of the spindle motors.

⚠ CAUTION
When the acceleration-time constant is not identical to the deceleration-time constant and the maximum motor torque is used during deceleration as in pressing machines or injection molding machines, the maximum acceleration-time outputs in Tables 4.5.1 (a) and (c) are multiplied by 1.1.

4.3.4 Number of Connected αi SV series and αi SP Series

Multiple αi SV and αi SP models can be connected to a single αi PS, provided the above output capacity conditions are satisfied.
The table below lists the maximum number of modules which can be connected.

Table 4.3.4 Maximum number of modules that can be connected

αi SP	αi SV		
	αi SV 1-axis amplifier	αi SV 2-axis amplifier	αi SV 3-axis amplifier
2	6		
		4	
			3

⚠ CAUTION

1 When different types of αi SV models are connected, the following condition must be satisfied:
Total number of connected amplifiers (6) ≥ number of αi SV 1-axis amplifiers × 1 + number of αi SV 2-axis amplifiers × 1.5 + number of αi SV 3-axis amplifiers × 2
The maximum number of αi SV models that can be connected is the same when an αi SP is not used.

2 No αi SV 3-axis amplifier is available in the 400-V input series.

4.3.5 Notes on 400-V Input αi PS series selection

When the 400-V input αi PS series is used, a restriction is imposed on the combination with an αi SP.

(1) For αi SP 30HV, select PSM-30HVi or a higher model.
(2) For αi SP 45HV, select PSM-45HVi or a higher model.
(3) For αi PS 75HV and αi PS 100HV, select αi PS 75HV or a higher model.

4.4 HOW TO SELECT THE αi PSR series (POWER SUPPLY, RESISTANCE DISCHARGE TYPE)

When Power Supply is selected, the conditions described in this section must all be satisfied.
Calculate the required rated output capacity and maximum output capacity using the calculation methods in Subsections 4.4.1 and 4.4.2 and then select an αi PS_R model that meets all the conditions.

Table 4.4 200-V input

Item \ Model	αi PSR 3	αi PSR 5.5
Rated output capability	3kW	7.5kW
Maximum output capability	12kW	20kW

NOTE
No specification is defined for the peak output capability of the αi PS_R models.

4.4.1 How to Obtain the αi PS_R series Rated Output Capability

Select an αi PS_R with a rated output not less than the sum of the total continuous rated output of the spindle motors times 1.15, plus the total continuous rated output of the servo motors times 0.6.

Rated output capacity of αi PS_R
≥ Σ Continuous rated output of spindle motor × 1.15
+Σ Continuous rated output of servo motor × 0.6

When only αi SP is to be connected to an αi PS_R, select Power Supply so that the 30-minute rated output of the spindle motor does not exceed the rated output capacity of the αi PS_R.

Rated output capacity of an αi PS_R ≥ 30-minute rated output of a spindle motor

Table 4.3 lists the rated output capacities of the αi PS_R models. Tables 4.5.1(a) to (d) list the continuous rated outputs of the servo motors. Tables 4.5.2(a) and (b) list the continuous rated outputs or 30-minute rated output of the spindle motors.

4.4.2 How to Obtain the αi PS_R series Maximum Output Capability

Select an αi PS_R so that the sum of the total maximum acceleration-time output of the spindle motors and the total maximum acceleration-time output of the servo motors that are accelerated simultaneously does not exceed the maximum output capability of the αi PS_R.

Maximum output of αi PS_R
≥ Σ Accelerating maximum output of spindle motor +
Σ Maximum acceleration-time outputs of the servo motors whose acceleration time exceeds **0.3 seconds**.
(on simultaneous acceleration/deceleration axis)

Table 4.4 lists the maximum output capacities of the αi PS_R models. Tables 4.5.1(a) to (d) list the accelerating maximum outputs of the servo motors. Tables 4.5.2(a) and (b) list the accelerating maximum outputs of the spindle motors.

4.4.3 Number of Connected αi SV series and αi SP series

Multiple αi SV models and αi SP models can be connected to a single αi PS_R, provided the above output capacity conditions are satisfied. The table below lists the maximum number of modules which can be connected.

Table 4.4.3 Maximum number of amplifiers that can be connected

αi SP	αi SV		
	αi SV 1-axis amplifier	αi SV 2-axis amplifier	αi SV 3-axis amplifier
0	4		
	1	2	
	2	1	
		1	1
1	2		
	1	1	
			1

⚠ CAUTION

When αi SV amplifiers are used together, the total number of the connected amplifiers must not exceed 4.

Total number of connected amplifiers (4) ≥ number of αi SV 1-axis amplifiers × 1 + number of αi SV 2-axis amplifiers × 1.5 + number of αi SV 3-axis amplifiers × 2

Even when no αi SP unit is used, the number of αi SV amplifiers that can be connected does not change.

4.4.4 Selecting a Regenerative Discharge Unit

In the αi PS_R, the regenerative discharge unit (regenerative resistor) dissipates the energy generated during deceleration of a motor (regeneration).
The amount of heat generated by the regenerative discharge unit varies with the motor type, rotation speed, load inertia, and continuous repetition cycle (duty cycle). Use a regenerative discharge unit of a suitable capacity for the load and operation cycle time.

How to Calculate the Required Capacity for the Regenerative Discharge Unit

Obtain the rotation energy of each servo motor and each spindle motor from the formula shown below. Then, see Table 4.4.4, and select a regenerative discharge unit so that the sum of the rotation energy values of the servo motors and spindle motors does not exceed the capacity of the regenerative discharge unit.

Capacity of regenerative discharge unit ≥Σ Rotation energy of motor

See Table 4.4.4 for details of the capacity of the regenerative discharge unit.

(1) Servo motor (for horizontal movement)
Amount of regenerative discharge (power [W]) when rapid traverse acceleration/deceleration is performed once every F sec

(a) SI unit system

$$w = \frac{1}{F} \times (5.48 \times 10^{-3} \cdot (Jm + JL) \cdot Vm^2 - 5.23 \times 10^{-2} \cdot ta \cdot Vm \cdot TL)\,[W]$$

F : Frequency of rapid traverse acceleration/deceleration [sec/number of times]
Unless otherwise specified, rapid traverse acceleration/deceleration is assumed to be performed about once every 5 seconds.
Jm : Rotor inertia of the motor [kg·m^2]
JL : Motor-shaft-converted inertia of the load [kg·m^2]
Vm : Motor speed at rapid traverse [min^{-1}]
ta : Rapid traverse acceleration/deceleration time [sec]
TL : Machine frictional torque (motor-converted value) [N·m]

(b) CGS unit system

$$w = \frac{1}{F} \times (5.37 \times 10^{-4} \cdot (Jm + JL) \cdot Vm^2 - 5.13 \times 10^{-3} \cdot ta \cdot Vm \cdot TL)\,[W]$$

F : Rapid traverse acceleration/deceleration cycle [s/number of times]
About once every five seconds unless otherwise specified
Jm : Rotor inertia of motor [kg·cm·s^2]
JL : Load inertia (value for motor shaft) [kg·cm·s^2]
Vm : Motor rotation speed for rapid traverse [min^{-1}]
ta : Rapid traverse acceleration/deceleration time [s]
TL : Friction torque of machine (value for motor) [kg·cm]

(2) Servo motor (for vertical movement)
The amount of regenerative discharge (power [W]) when the operation duty for downward rapid traverse is D(%)

(a) SI unit system

$$w = 1.047 \times 10^{-1} \cdot Th \cdot Vm \times \frac{D}{100} \ [W]$$

Th : Upward torque that the motor applies at the time of downward rapid traverse [N·m]
Vm : Motor speed at rapid traverse [min^{-1}]
D : Operation duty [%] for downward rapid traverse
D is set to 50% maximum. Usually, D is less than 50%.

(b) CGS unit system

$$w = 1.026 \times 10^{-2} \cdot Th \cdot Vm \times \frac{D}{100} \ [W]$$

Th : Upward torque of motor during lowering by rapid traverse [kg·cm]
Vm : Motor rotation speed for rapid traverse [min^{-1}]
D : Downward operation duty during lowering by rapid traverse [%]
D is a maximum of 50% and usually less.

(3) Spindle motor

(a) SI unit system

$$w = 5.48 \times 10^{-3} \cdot (Jm + JL) \cdot N^2 \times \frac{1}{Dt} [W]$$

Jm : Rotor inertia of the motor [$kg \cdot m^2$]
JL : Motor-shaft-converted inertia of the load [$kg \cdot m^2$]
N : Motor speed [min^{-1}]
Dt : Duty cycle [sec]

(b) CGS unit system

$$w = 5.37 \times 10^{-2} \cdot (Jm + JL) \cdot N^2 \times \frac{1}{Dt} [W]$$

Jm : Rotor inertia of motor [$kg \cdot cm \cdot s^2$]
JL : Load inertia (value for motor shaft) [$kg \cdot cm \cdot s^2$]
N : Motor rotation speed [min^{-1}]
Dt : Duty cycle [s]

Cautions for selecting a regenerative discharge unit

Table.4.4.4 Required capacity for the Regenerative Discharge unit

Regenerative discharge unit	Capacity			Remarks
	Wind speed			
	0m/sec	2m/sec	4m/sec	
A06B-6089-H510	100W	250W	-	Resistance : 16Ω
A06B-6089-H500	200W	400W	600W	Resistance : 16Ω
A06B-6089-H713	-	-	800W	Forced cooling fan motor is included Resistance : 16Ω
A06B-6089-H711	-	-	800W	Forced cooling fan motor is included Resistance : 8Ω
A06B-6089-H712	-	-	1200W	Forced cooling fan motor is included Resistance : 8Ω

NOTE
1 The "maximum output at acceleration" value is provided only to aid in the selection of an αi PS_R; this is not a guaranteed value.
2 When a spindle motor with a maximum output of 5kW or more is used, the resistance of the regenerative discharge unit must be 8Ω. If a regenerative discharge unit with a resistance of 16Ω is used for a spindle motor with a maximum output of 5 kW or more, a regeneration excess alarm (alarm No. 08) may be generated in the αi PS_R when the spindle is decelerated.

4.5 LIST OF MOTOR OUTPUT CAPACITIES FOR αi PS AND αi PSR series SELECTION

4.5.1 Servo Motor Continuous Rated Outputs and Maximum Outputs at Acceleration

This section gives the output data for servo motor. These data are used for selecting an αi PS or αi PS_R. See FANUC AC SERVO MOTOR αis/αi series DESCRIPTIONS (B-65262EN) for details.

(1) Servo motor αis/αi series (200-V input series)

Table 4.5.1(a)

Motor model	Continuous rated output	Maximum output at acceleration
αiF 1/5000	0.50kW	2.0kW
αiF 2/5000	0.75kW	2.9kW
αiF 4/4000	1.4kW	4.5kW
αiF 8/3000	1.6kW	5.7kW
αiF 12/3000	3.0kW	7.6kW
αiF 22/3000	4.0kW	9.6kW
αiF 30/3000	7.0kW	21kW
αiF 40/3000	6.0kW	18kW
αiF 40/3000+FAN	9.0kW	18kW
αiS 2/5000	0.75kW	2.8kW
αiS 2/6000	1.0kW	2.4kW
αiS 4/5000	1.0kW	3.1kW
αiS 8/4000	2.5kW	8.0kW
αiS 8/6000	2.2kW	11kW
αiS 12/4000	2.7kW	12kW
αiS 22/4000	4.5kW	17kW
αiS 22/6000	4.5kW	21kW
αiS 30/4000	5.5kW	22kW
αiS 40/4000	5.5kW	24kW
αiS 50/3000	5kW	39kW
αiS 50/3000 +FAN	14kW	39kW
αiS 100/2500	11kW	38kW
αiS 100/2500+FAN	22kW	38kW
αiS 200/2500	16kW	48kW
αiS 200/2500+FAN	30kW	48kW
αiS 300/2000	52kW	96kW
αiS 500/2000	60kW	104kW

NOTE
There is a possibility to change the data.

(2) Servo motor β*i*S series (200-V input series)

Table 4.5.1(b)

Motor model	Continuous rated output	Maximum output at acceleration
β*i*S 0.2/5000	0.05kW	0.24kW
β*i*S 0.3/5000	0.1kW	0.4kW
β*i*S 0.4/5000	0.13kW	0.5kW
β*i*S 0.5/6000	0.35kW	1.3kW
β*i*S 1/6000	0.5kW	2.3kW
β*i*S 2/4000	0.5kW	2.3kW
β*i*S 4/4000	0.75kW	2.5kW
β*i*S 8/3000	1.2kW	2.8kW
β*i*S 12/2000	1.4kW	2.8kW
β*i*S 12/3000	1.8kW	5.4kW
β*i*S 22/2000	2.5kW	5.2kW
β*i*S 22/3000	3.0kW	8.8kW

NOTE
There is a possibility to change the data.

(3) Servo motor αi series (400-V input series)

Table 4.5.1(c)

Motor model	Continuous rated output	Maximum output at acceleration
αiF 4/4000HV	1.4kW	4.5kW
αiF 8/3000HV	1.6kW	5.7kW
αiF 12/3000HV	3.0kW	7.5kW
αiF 22/3000HV	4.0kW	9.6kW
αiS 2/5000HV	0.75kW	2.8kW
αiS 2/6000HV	1.0kW	2.4kW
αiS 4/5000HV	1.0kW	3.1kW
αiS 8/4000HV	2.3kW	8.0kW
αiS 8/6000HV	2.2kW	11kW
αiS 12/4000HV	2.5kW	12kW
αiS 22/4000HV	4.5kW	19kW
αiS 22/6000HV	4.5kW	21kW
αiS 30/4000HV	5.5kW	22kW
αiS 40/4000HV	5.5kW	24kW
αiS 50/3000HV	5kW	39kW
αiS 50/3000HV +FAN	14kW	39kW
αiS 100/2500HV	11kW	38kW
αiS 100/2500HV+FAN	22kW	38kW
αiS 200/2500HV	16kW	48kW
αiS 200/2500HV+FAN	30kW	48kW
αiS 300/2000HV	52kW	96kW
αiS 500/2000HV	60kW	104kW
αiS 1000/2000HV	100kW	189kW
αiS 1000/2000HV	110kW	190kW
αiS 2000/2000HV	200kW	400kW
αiS 3000/2000HV	220kW	690kW

NOTE
There is a possibility to change the data.

(4) Servo motor β*i*S series (400-V input series)

Table 4.5.1(c)

Motor model	Continuous rated output	Maximum output at acceleration
β*i*S 2/4000HV	0.5kW	2.3kW
β*i*S 4/4000HV	0.75kW	2.5kW
β*i*S 8/3000HV	1.2kW	2.8kW
β*i*S 12/3000HV	1.8kW	5.4kW
β*i*S 22/2000HV	2.5kW	5.2kW
β*i*S 22/3000HV	3.0kW	8.8kW

NOTE
There is a possibility to change the data.

4.5.2 Spindle Motor Continuous Rated Outputs and Maximum Outputs at Acceleration

This section gives the output data for spindle motor. These data are used for selecting Power Supply module of the αi PS and αi PS_R See FANUC AC SPINDLE MOTOR αi series DESCRIPTIONS (B-65272EN) for details.

(1) Spindle motor αi series (200-V input series)

Table 4.5.2(a)

Motor model	Continuous rated output	30-minute rated output	Maximum output at acceleration
αi I 0.5/10000	0.55kW	1.1kW(15-minute rated)	1.32kW
αi I 1/10000	1.5kW	2.2kW(15-minute rated)	2.64kW
αi I 1/15000	1.5kW	2.2kW(15-minute rated)	5.6kW
αi I 1.5/10000	1.1kW	3.7kW(10-minute rated)	4.44kW
αi I 1.5/15000	1.5kW	2.2kW(15-minute rated)	13kW
αi I 2/10000	2.2kW	3.7kW(15-minute rated)	4.44kW
αi I 2/15000	2.2kW	3.7kW(15-minute rated)	20kW
αi I 3/10000	3.7kW	5.5kW	6.6kW
αi I 3/12000	3.7kW	5.5kW	13kW
αi I 6/10000 αi I 6/12000	5.5kW	7.5kW	9kW
αi I 8/8000 αi I 8/10000	7.5kW	11kW	13.2kW
αi I 12/7000 αi I 12/10000	11kW	15kW	18kW
αi I 15/7000 αi I 15/10000	15kW	18.5kW	22.2kW
αi I 18/7000 αi I 18/10000	18.5kW	22kW	26.4kW
αi I 22/7000 αi I 22/10000	22kW	26kW	31.2kW
αi I 30/6000	30kW	37kW	44.4kW
αi I 40/6000	37kW	45kW	54kW
αi I 50/6000	45kW	55kW	66kW
αi I_P 12/6000 αi I_P 12/8000	5.5kW	7.5kW	12.3kW
αi I_P 15/6000 αi I_P 15/8000	7.5kW	9kW	13.5kW
αi I_P 18/6000 αi I_P 18/8000	9kW	11kW	15.1kW
αi I_P 22/6000 αi I_P 22/8000	11kW	15kW	20kW
αi I_P 30/6000	15kW	18.5kW	25kW
αi I_P 40/6000	18.5kW	22kW	29kW
αi I_P 50/6000	22kW	30kW	35.4kW
αi I_P 60/4500	22kW	30kW	36kW

NOTE
There is a possibility to change the data.

(2) Spindle motor αi series (400-V input series)

Table 4.5.2(b)

Motor model	Continuous rated output	30-minute rated output	Maximum output at acceleration
αi I 0.5/10000HV	0.55kW	1.1kW(15-minute rated)	1.32kW
αi I 1/10000HV	1.5kW	2.2kW(15-minute rated)	2.64kW
αi I 1.5/10000HV	1.1kW	3.7kW(10-minute rated)	4.44kW
αi I 2/10000HV	2.2kW	3.7kW(15-minute rated)	4.44kW
αi I 3/10000HV	3.7kW	5.5kW	6.6kW
αi I 6/10000HV	5.5kW	7.5kW	9kW
αi I 8/8000HV	7.5kW	11kW	13.2kW
αi I 12/7000HV	11kW	15kW	18kW
αi I 15/7000HV	15kW	18.5kW	22.2kW
αi I 22/7000HV	22kW	26kW	31.2kW
αi I 30/6000HV	30kW	37kW	44.4kW
αi I 40/6000HV	37kW	45kW	54kW
αi I 60/4500HV	60kW	75kW	90kW
αi I 100/4000HV	100kW	−	117kW
αi I_P 15/6000HV	7.5kW	9kW	13.5kW
αi I_P 22/6000HV	11kW	15kW	20kW
αi I_P 40/6000HV	18.5kW	22kW	29kW
αi I_P 50/6000HV	22kW	30kW	35.4kW
αi I_P 60/4500HV	22kW	30kW	36kW

NOTE
There is a possibility to change the data.

5 INSTALLATION

Chapter 5, "INSTALLATION", consists of the following sections:

5.1 LEAKAGE CURRENT 103
5.2 GROUND.....104
5.3 NOISE PREVENTION.....108
5.4 AMPLIFIER INSTALLATION.....117
5.5 AMPLIFIER INSTALLATION NOTES RELATING TO SAFETY STANDARDS.....118
5.6 NOTES ON COOLANT (REFERENCE).....126

5.1 LEAKAGE CURRENT

The servo amplifier αi series drives the motor by using the transistor PWM inverter method. This causes a high-frequency leakage current to flow via the ground drift capacitance in the motor winding, power cable, and amplifier. This may cause a device installed on Power supply side, such as a ground fault interrupter or leakage-protection relay, to malfunction.
When a circuit breaker with a ground fault interrupter is used, it must be selected so that the sum of the values calculated according to (a) and (b) described below is not greater than the non-operating current value.

(a) Selection criterion per amplifier
Model : αi SV and αi SP
Criterion for selection : 2 mA per amplifier (Note 1)

(b) Selection criterion per motor
Criterion for selection : 1 mA per motor (Note 1)

The following example shows how to use selection criteria (a) and (b):
Example :

When the system consists of αi SV 1-axis × 1, αi SV 3-axis × 1 (three motors), and αi SP × 1

2 mA×3 (for the amplifiers) + 1 mA×5 (for the motors) = 11 mA

→ Select a circuit breaker (Note 2) with a non-operating current of 11 mA or higher. (A general ground fault interrupter that can be used for the above example is the one with a rated sensitivity current of 30 mA and a non-operating current of 15 mA.)

NOTE
1 These criteria are for selecting a circuit breaker with a ground fault interrupter; they do not indicate accurate leakage currents.
2 A circuit breaker may malfunction depending on the frequency characteristic of the ground fault interrupter. Therefore, use a ground fault interrupter supporting the use of inverters.
3 The above criteria are values in the commercial frequency band. Some measuring instruments for measuring leakage current may sense a high frequency band, thus showing a larger value.

5.2 GROUND

5.2.1 Ground Systems

There are three ground systems for CNC system grounding.

(a) Signal ground system (SG)
The signal ground (SG) supplies the reference voltage (0V) of the electrical signal system.

(b) Frame ground system (FG)
The frame ground system (FG) is used for safety, and suppressing external and internal noises. In the frame ground system, the frames, panels, and shields for the interface cables between the units are connected.

(c) System ground system (PE)
In the system ground system (PE), frame ground provided for each device or among units is connected systematically to ground at one place.

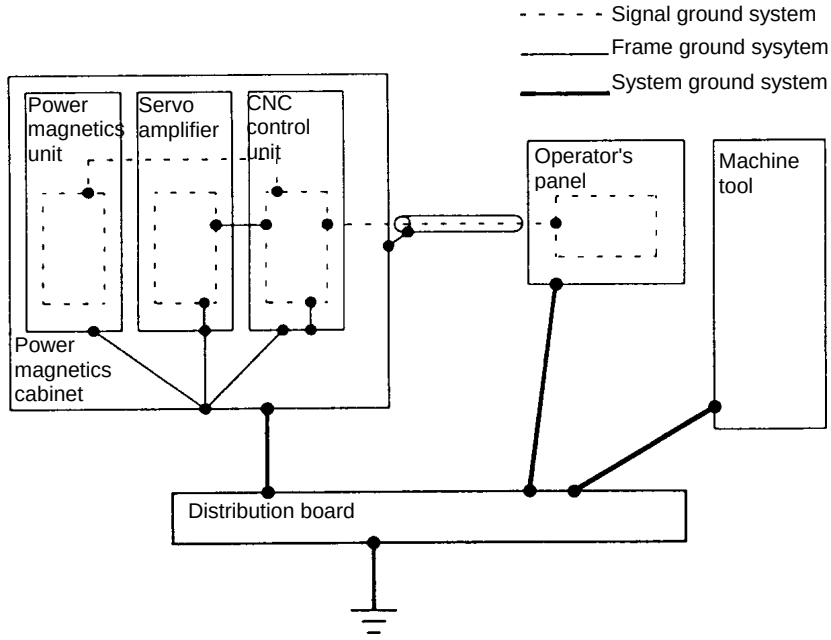

5.2.2 Grounding Method

Generally, noise that causes problems is high-frequency noise. Grounding each device with a low impedance(NOTE) is a key to suppression of high-frequency noise. Methods of grounding for this purpose are explained below.

NOTE
In addition to a resistance component, which converts current to heat, impedance contains a reactance component, which prevents the flow of AC current at a certain frequency.

(1) Multi-point grounding
If a metal plate of a cabinet is grounded with a sufficiently low impedance, the metal plate is used as a ground plate, and each device is grounded nearby. This method allows grounding to a low-impedance metal plate of the cabinet over a shortest distance, and can therefore effectively suppress high-frequency noise. On the other hand, because a metal plate of a cabinet is used as a ground plate, noise suppression efficiency depends on the structure of the cabinet. For cabinets, see Subsection 1.1.4. Fig. 1 shows a cabling schematic.
When the multi-point grounding method is used, units can be grounded with a low impedance, and the lengths of ground cables can also be reduced, so cabling can be simplified.

NOTE
If a metal plate of a cabinet does not show a low impedance, a noise problem may arise between the power ground line and signal ground line.

(2) Single-point grounding
Signal lines and power lines are grounded separately, and grounding is performed at a single point to suppress noise from a power line to signal line. With this method, the length of a cable for grounding a unit tends to be long. So, to suppress high-frequency noise sufficiently, the cable diameter must be increased, or more than one connection cable must be used. Fig. 2 shows a cabling schematic.

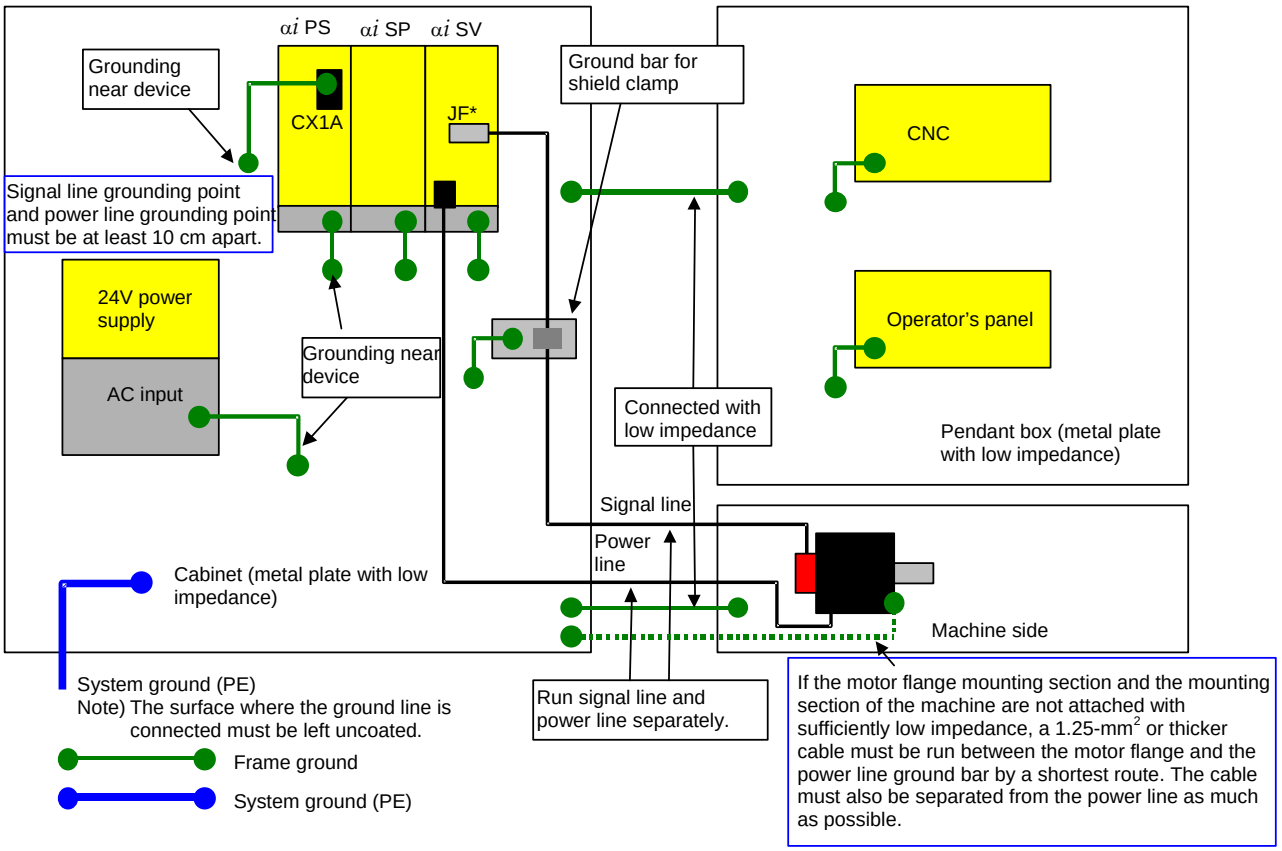

Fig. 1 Schematic of multi-point grounding

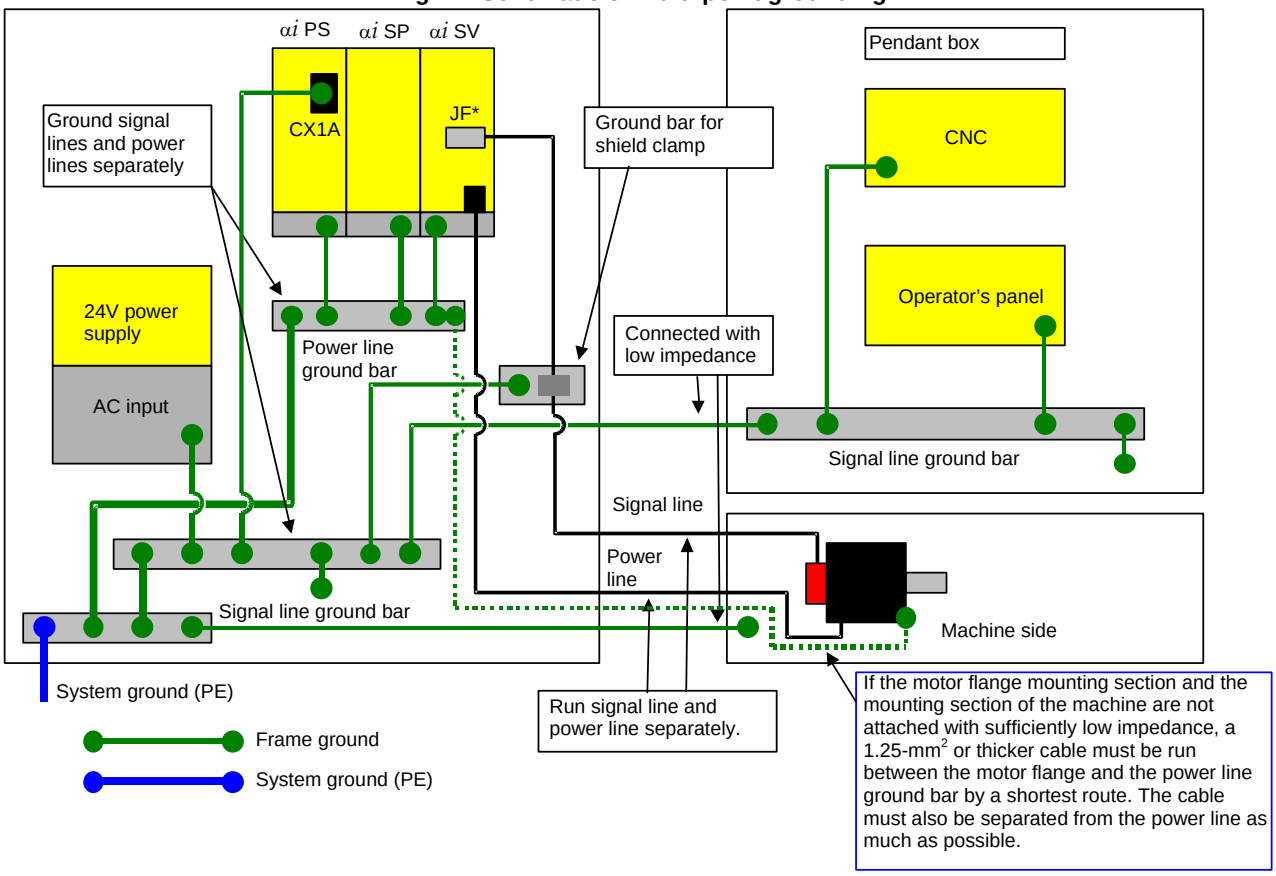

Fig. 2 Schematic of single-point grounding

5.2.3 Notes on Connecting

- Connect the signal ground (0V) with the frame ground (FG) at only one place in the αi PS.
- The grounding resistance of the system ground shall be 100 ohms or less (class D grounding).
- The system ground cable must have enough cross-sectional area to safely carry the accidental current flow into the system ground when an accident such as a short circuit occurs. (Generally, it must have the cross-sectional area of the AC power cable or more.)
- Use the cable containing the AC power wire and the system ground wire so that power is supplied with the ground wire connected.

NOTE

1 Securing the ground terminal and a cable together is not permitted.

2 The motor flange mounting section may not be able to be connected to the machine mounting section of the power magnetics cabinet via the mechanical unit at sufficiently low impedance in a machine. In this case, a cable of a minimum required length that is at least 1.25 mm^2 thick must be run from the motor flange to the frame ground of the power magnetics cabinet. The cable must also be separated from the motor power line as much as possible.

5.3 NOISE PREVENTION

5.3.1 Separation of Signal Lines

If a signal cable is near a power cable, noise may be induced. The signal cables must be separated from the power cables when routed. When power and signal cables cannot possibly be separated from each other, the cables must be run in parallel in the minimum distance. When a conduit is used, it is recommended that the signal cables be separated from the power cables in it.

[Types of cables]

Group	Signal type	Action
A	Amplifier input power line	Separate binding (Note 1) or electromagnetic shielding (Note 2) is necessary for group B cables.
	Motor power line	
	Magnetic contactor driving coil (Note 3)	
B	Cable between CNC and SPM	Separate binding or electromagnetic shielding is necessary for group A cables. All cables must be shielded.
	Cable for position feedback or velocity feedback	
	Cable for Positioncoder	
	Other cable related to sensor	

NOTE
1 The groups must be 10 cm or more apart from one another when binding the cables in each group.
2 The electromagnetic shield refers to shielding between groups with grounded steel plates.
3 Attach a noise suppressor such as a spark killer to the magnetic contactor driving coil.

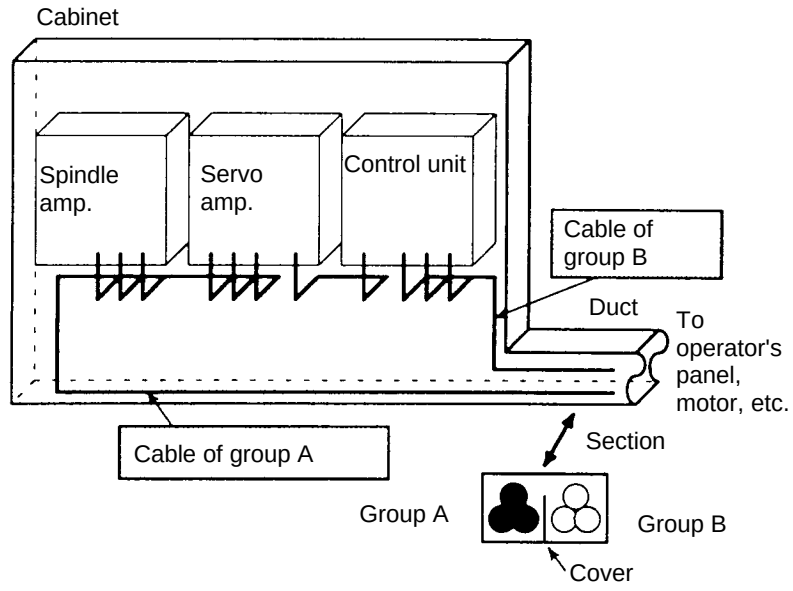

5.3.2 Cable Clamp and Shield Processing

Basically, signal lines require shield clamping. Correct shield clamping can suppress noise from the outside.
Strip part of the cable jacket to expose the shield sheath, and secure that part of the cable to the ground bar by using a clamp. At this time, the ground bar must be in contact with the surface of the shield so that the contact area becomes wide. (See the figure.)
When using the multi-point grounding method, remove the coating of the part where the shield clamp ground bar is connected to the cabinet, to allow surface contact.

- Terminal processing of the shield sheaths
  Perform terminal processing of the shield sheaths of the signal cables according to the description in Section 9.3.

- Cable clamp
  The cables that run into the amplifier and which require shield processing, with the exception of K14, K15, K17, K18, K19, K31, and K33, must be clamped as indicated in Fig. 5.3.2(a).

  Clamping secures a cable and also provides shielding. Clamping must always be performed since it is very important for stable system operation.

  Connect the cable clamp of the signal cables of αi SV connected to common αi PS to common the ground plate for signals.

- Grounding
  The ground plate must be created and installed by the user as shown in Figs.5.3.2(b) to (e).

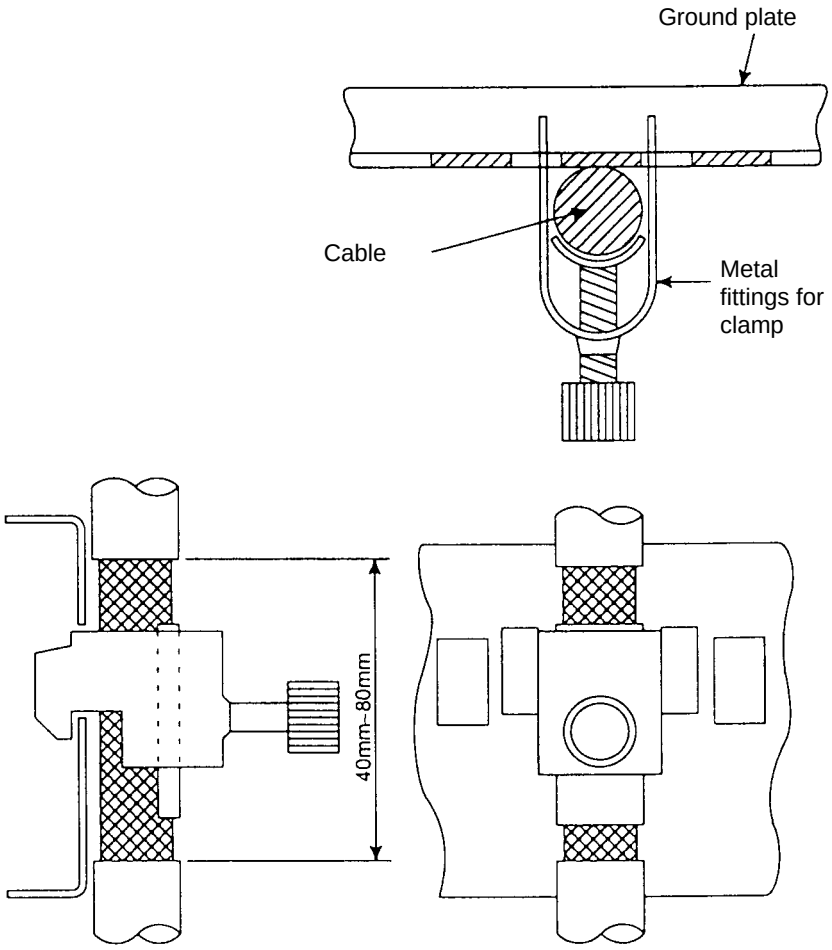

Fig.5.3.2(a) Cable clamp (1)

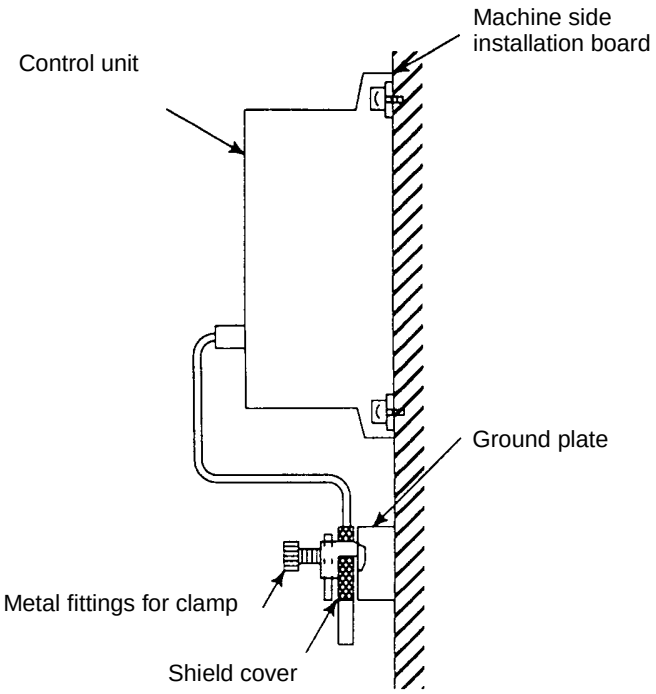

Fig.5.3.2(b) Cable clamp (2)

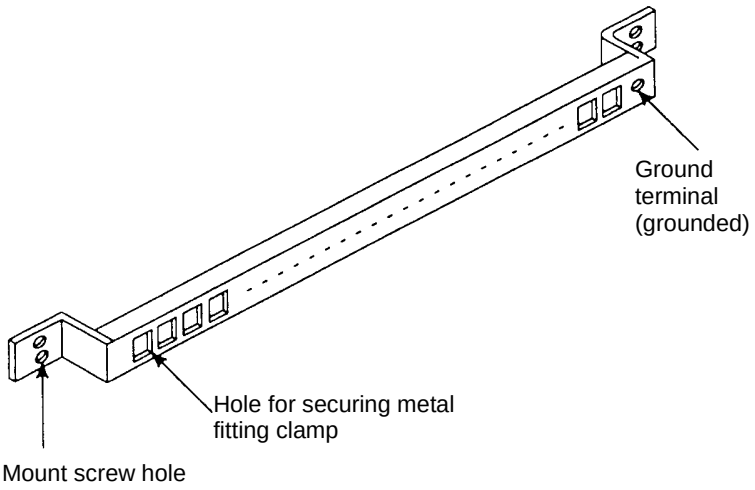

Fig.5.3.2(c) Ground plate

For the ground plate, use a metal plate of 2 mm or thicker, which surface is plated with nickel.

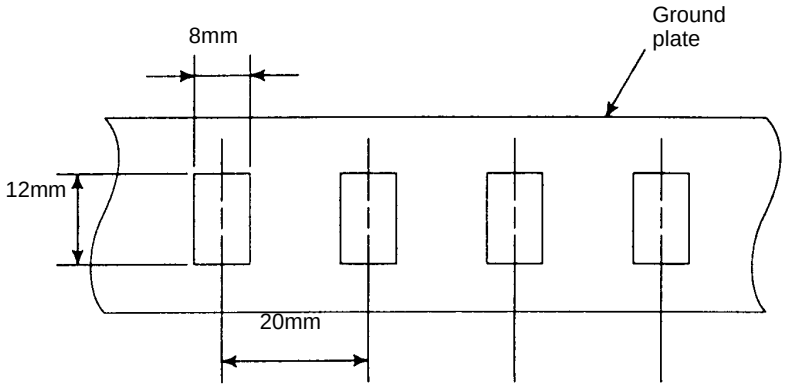

Fig.5.3.2(d) Ground plate holes

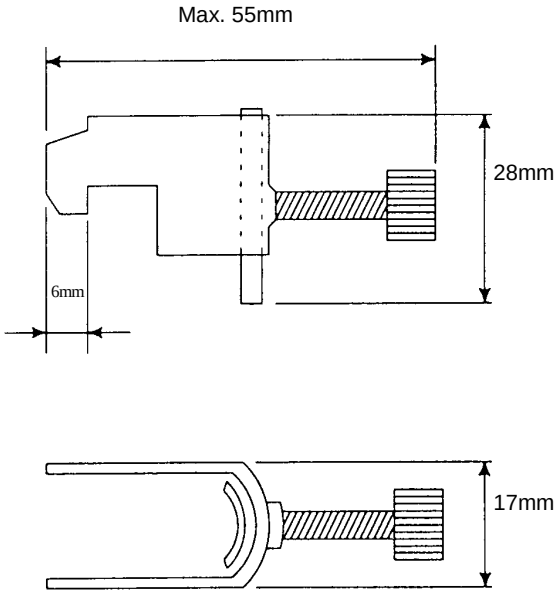

Fig.5.3.2(e) Outer drawings of metal fittings for clamp

5.3.3 Cabinet

A cabinet is a key element for improving noise resistance and suppressing radiation noise.
One factor of noise resistance and radiation noise problems is insufficient electrical conductivity between metal plates of a cabinet. Generally, noise that causes problems is high-frequency noise. Therefore, a cabinet needs to be designed considering high-frequency noise.

(1) Basic structure of a cabinet
Basically, cabinets should be made of metal.
To improve noise resistance, the metal plates of the side walls, top plate, and bottom plate of a cabinet must be electrically low-impedance conductive. So, welding is recommended for the cabinet.
Bead (continuous) welding, rather than spot welding, should be applied to the cabinet to enhance low-impedance electrical conductivity among the metal plates.
When the cabinet uses a built-up structure, joint part of each metal plate must be left uncoated, so that the plates come in direct contact with each other to provide electrical conductivity.
When metal plates are connected only via cables because of structural restrictions, it becomes more difficult to achieve low-impedance connection than when the metal plates are welded or are in direct contact. It is necessary to ensure large sectional areas of the cables used, sufficient conductivity of the connection parts, and large contact areas.

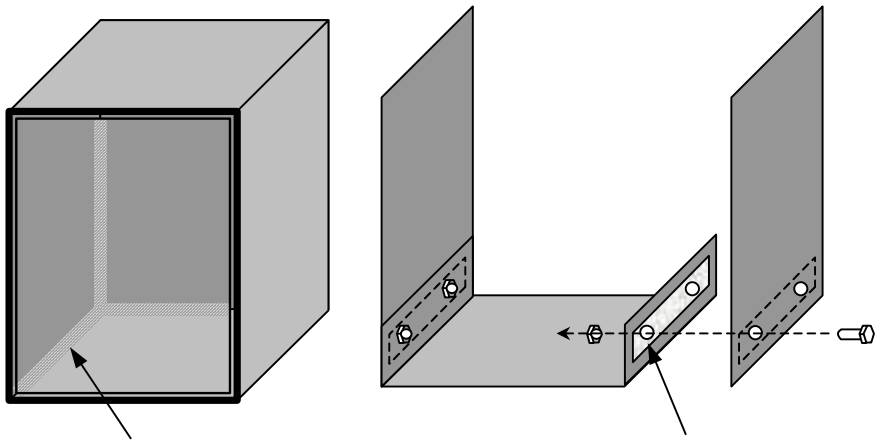

NOTE
The purpose of the description in this subsection is to provide a cabinet with low-impedance electric conductivity to improve noise resistance. To implement a protection circuit, a cable having an appropriate sectional area for the AC input power capacity of the unit mounted on each metal plate needs to be used to connect the metal plates to perform protective grounding.

(2) Installing a unit in a cabinet
Run the ground cable of the unit by a shortest route. If the conductive wire of the ground cable is thin, impedance to high-frequency noise in particular becomes high, so grounding becomes less effective. For the position of the ground terminal of each unit, see the relevant manual. When a metal plate is installed in the cabinet after a unit is attached to the metal plate, the following method should be used. Attach the metal plate to the cabinet so that their wide areas left uncoated by masking come in contact with each other. The method of using only screws to provide electric conductivity is not recommended because impedance to high frequencies cannot be decreased sufficiently.

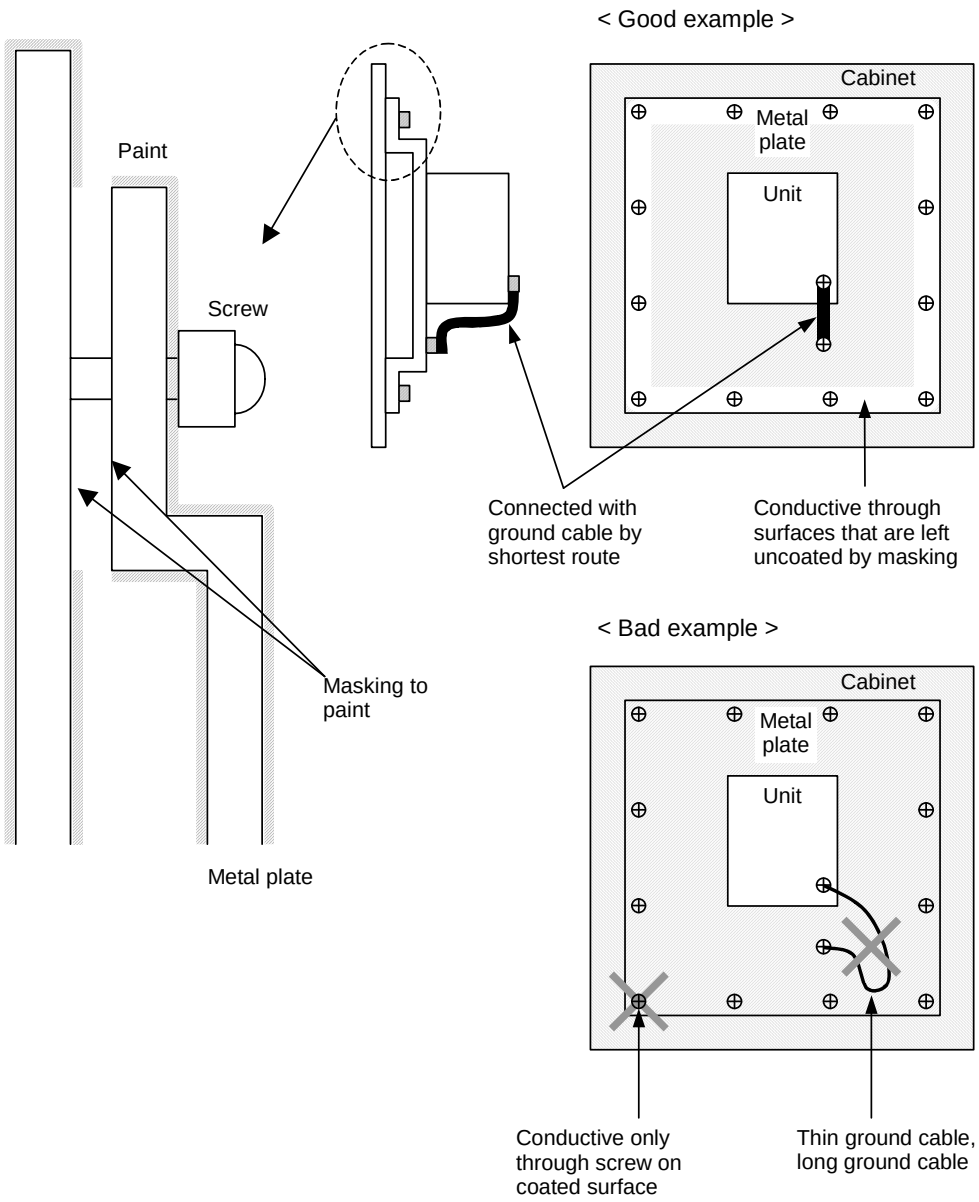
< Good example >
Cabinet
Metal plate
Unit
Paint
Screw
Masking to paint
Metal plate
Connected with ground cable by shortest route
Conductive through surfaces that are left uncoated by masking
< Bad example >
Cabinet
Metal plate
Unit
Conductive only through screw on coated surface
Thin ground cable, long ground cable

5.3.4 Others

Cable length

If a cable is longer than required, a loss of power increases, and the signal line becomes likelier to be affected by noise. Use each cable of the minimum required length.

Use of shield cables

- Satisfying the requirements of the EMC Directives
  For details, refer to "Satisfying the Requirements of the EMC Directive" (A-72937).

- Protection against noise
  Noise generated from the shielded wire of a power shield cable may affect signals via the shielded wire of a signal cable. For this reason, separate the ground of the shielded wire of a power cable from that of the shielded wire of a signal cable. Use different ground clamping plates (ground plates) for power cables and signal cables to improve safety.

5.4 AMPLIFIER INSTALLATION

A restriction is imposed on the order of amplifier installation as described below.

(1) When an αi SP 45, αi SP 55, αi SP 30HV, αi SP 45HV, αi SP 75HV, or αi SP 100HV is used
Install the αi PS and αi SP close to each other.

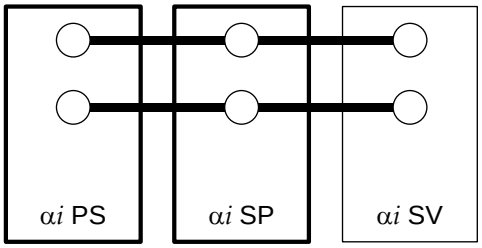

(2) When an αi SV 360HV is used
Install the αi PS and αi SV 360HV close to each other.

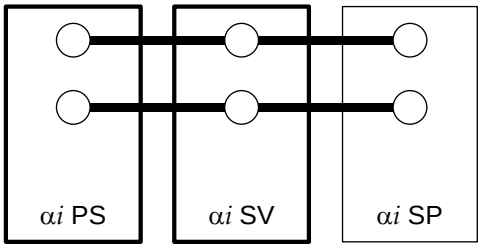

5.5 AMPLIFIER INSTALLATION NOTES RELATING TO SAFETY STANDARDS

The αi series servo amplifiers are designed to meet the following safety standards:
EN50178 1997
UL508C Second Edition or Third Edition
To verify the conformity to these standards, the amplifiers are certified by TÜV Rheinland, a third certification organization, and UL.
When performing the CE Marking or UL Marking process, in design of the power magnetics cabinet, pay special attention to the installation conditions described in this section.

5.5.1 Requirements of EN and IEC Standards

5.5.1.1 Classification in standards on insulation design

(1) Insulation between circuits and between a circuit and protective ground
According to EN50178 5.2, insulation design of the amplifier conforms to the related standards in IEC60664 Part 1.

- The primary (the power supply and main circuit side) and the secondary (control circuit side) are separated by enforced insulation to ensure safety.
- Basic insulation is applied to the protective ground side.

Basic insulation is also applied between the main circuit of the power supply and the aluminum flanges (integrated with the heat sink), so connect a protective ground cable to the ground terminal of the lower aluminum flange.

(2) Installation category (overvoltage category)
In EN50178 5.2.16.2, power supply facilities are classified according to the impulse voltage to ground, included in the power supply to which the amplifier is connected.
This amplifier is designed to fall into installation category (overvoltage category) II.

Space distance is designed on the assumption that the rated impulse withstanding voltage (impulse voltage to ground) that appears in the power supply to which the amplifier is connected is 2.5 kV or less. If an impulse to ground that is higher than the assumed value appears in the power supply, it needs to be suppressed. In general, this condition is considered to be satisfied if an insulation transformer is used in the power supply input section of the machine. If an insulation transformer is not used, a surge protector (lightning surge absorber) must be inserted before ground to suppress impulse higher than 2.5 kV to ground.

(3) Pollution degree of the installation environment and protection class of the power magnetics cabinet
EN 50178 5.2.15.2 requires that when the machine is installed in the environment of ordinary plants, the class of protection against dust, coolant, chips, and so on be IP54 or higher.
If the power magnetics cabinet satisfies this requirement, the degree of pollution inside the power magnetics cabinet is considered to be class 2.

Insulation design of this amplifier assumes that the amplifier is installed in an environment with pollution degree 2.
When the amplifier is used in a general machine installation environment, install the amplifier in a power magnetics cabinet that satisfies protection class IP54 or higher.
The IP level, however, is determined by the environment (atmosphere) in which the machine is installed. So, the protection class of the power magnetics cabinet should be selected according to the environment.
When an external heat sink cooling type amplifier of which heat sink fin protrudes behind the mounting flange is used, the fin section must be in a cooling area (duct) conforming to around IP22 to IP33, and must be protected from being exposed to direct splashes of coolant, chips, and so forth.

5.5.1.2 Protection against electric shock

(1) Protection against direct contact with charged parts (EN50178 7.2.1)
The electric shock protection level of this amplifier after it is installed is equivalent to IP1X (hand protection), which requires protection against unintentional or careless contact.

This amplifier must be installed in a power magnetics cabinet. According to Section 6.2.1, "Electric shock protection by cabinets", in EN 60204-1, the power magnetics cabinet must be equipped with a lock so that when the power to the amplifier is on, the power magnetics cabinet cannot be opened by persons except special maintenance personnel or persons authorized to do maintenance work who have been sufficiently trained in prevention of electric shock.

If the operator of the machine needs to open the power magnetics cabinet for some operations, the operator must be given thorough safety training, or a protection cover must be provided to prevent the operator from touching the amplifier.

(2) Confirmation of discharge of the electrolytic capacitor (EN50178 7.2.1)
This amplifier includes a large-capacity electrolytic capacitor for the power smoothing circuit. Even after the power supply input circuit is shut off, this capacitor remains charged for a while.

When it becomes necessary to touch the amplifier to do maintenance work or for other purposes, wait until the discharge time indicated on the face plate of the amplifier is passed, or start work after ensuring safety by measuring the residual voltage of the DC link section with a volt-ohm meter and checking that the LED (red) indicating charging is turned off.

(3) Leakage current to the protective ground cable (EN50178 7.2.11)
The motor is controlled by changing the average amplitude and frequency of voltage by pulse duration modulation and applying the modulated voltage to the armature. To do this, chopper voltage at a frequency of several kilohertz, which is the carrier frequency for the pulse duration modulation, is applied to the power line of the motor.

Ground stray capacitance mainly between the motor winding and casing and between the power line and protective ground line of the motor power cable causes leakage current to flow through the protective ground line of the motor power cable and machine ground, part of which flows also to the protective ground line of the machine.
The resultant leakage current value is around 1 to 2 mA per motor axis at the commercial power frequency component (50/60Hz). However, with the measurement circuit defined by EN 50178 5.2.11, the sensitivity of high-frequency components cannot be reduced sufficiently, so a value greatly exceeding 3.5 mA is sometimes observed.

If the machine is not grounded, making contact with the machine can result in electric shock. Therefore, provide sufficient protection against electric shock by taking one of the following measures:

(a) Use a protective ground cable with a copper wire having a sectional area of 10 mm^2 or more.
(b) Install a ground-fault circuit interrupter to shut off power as soon as a ground fault occurs.
(c) Add a protective ground terminal to the cabinet to duplicate protective ground cable connection.
(d) When installing an RCD unit, use RCD type B.

When using a ground-fault circuit interrupter, select an electromagnetic type with low high-frequency component sensitivity or an electronic type supporting inverters to prevent troubles due to high-frequency components. Measure (a) or (d), which can detect leakage current, is recommended.

5.5.1.3 Protective grounding

The amplifier has several protective ground terminals (marked according to 417-IEC-5019). These terminals are used not only for protection against electric shock due to dielectric breakdown but also for functional grounding to prevent noise.
Connect all the protective ground terminals to the protective ground (PE) terminal in the power magnetics cabinet.

For how to connect a protective ground cable and its cable diameter, refer to Section 5.2, "GROUND", and Subsection 9.3.1.7, "Details of cable K70", in B-65282EN/06.
Note that connecting a cable terminal to a protective ground point is not permitted.

5.5.1.4 EMC

For CE Marking, the EMC Directive must be observed. FANUC's products have obtained certificates of conformance to EN61000 6.2:2001 and EN55011:1998+A1+A2 (EMC Directive (EC Directive 89/336/EEC) from a third certification organization.
In addition, EMC of the machine and system units must be evaluated according to the above EU and (or) other requirements.

5.5.1.5 Notes on the emergency stop circuit configuration

The power system in the amplifier is shut off by IGBT (transistor) and not by electro-mechanical means.
When configuring an emergency stop circuit, therefore, be sure to insert a line contactor to the power input line of Power Supply for power feeding to allow electro-mechanical shut-off operation, so that voltage is applied to the control coil of the contactor via the contactor control output of Power Supply.

If the amplifier fails, even when the emergency stop command input (*ESP) of the amplifier is driven low, the output relay of Power Supply cannot sometimes be turned off, disabling the line contactor from being shut off.

To surely shut off power, besides the shut-off feature of the amplifier, the emergency stop circuit must have a redundant circuit structure that has an independent route for directly shutting off the line contactor when a command is issued from the emergency stop switch.

When a spindle amplifier module is used, if the power line is shut off during spindle rotation, the power regeneration function may not be able to stop the spindle immediately, allowing the spindle to coast for a long time. So, the redundant circuit mentioned above must have a delay feature using an off-delay timer with a normal stop time taken into account.

5.5.1.6 Reduction of load ratio to ambient temperature

Some servo amplifier models have been approved as products conforming to standards with a load reduction ratio described below set.
If the load ratio is exceeded during use, the permissible temperature range of a part used may be exceeded, which can result in the issuance of an overheat alarm or decrease of the life of the part. So, the amplifier must be used so that the reduction characteristic is not exceeded.
For the load reduction ratio, refer to "(6) Derating" in Section 2.2.

5.5.1.7 Overload protection

An overload protection feature is provided as follows:
In the αi SP, the protection feature works when the maximum output continues for 30 s or longer.
In the αi SV, the protection feature works when the current level becomes 1.3 times as high as the rated current of the motor.

5.5.1.8 External overload protection device

The servo amplifier is not equipped with a special protection device. To protect conductors, pay attention to the specifications of the power supply unit.

5.5.1.9 Over-speed protection

The αi series servo amplifiers are not equipped with an over-speed protection device.

5.5.1.10 24-V power supply

Normally, the power for controlling the αi SV and αi SP is supplied from the αi PS. When supplying the power from another external power supply, use a class 2 power supply. The class 2 power supply uses a transformer and other parts that are proven safety. For details, contact the power supply manufacturer.

5.5.1.11 Screw tightening torque

The screws of the servo amplifier are tightened with the following torque:

Screw size	Tightening torque (Nm)
M4	1.1 to 1.5
M5	2.0 to 2.5
M6	3.5 to 4.5
M10	15 to 16

5.5.2 Requirements of UL Standards

5.5.2.1 Classification in standards on insulation design

(1) Insulation between circuits and between a circuit and protective ground (UL508C 36)
According to UL508C, insulation design of the amplifier conforms to the requirements of UL840. Connect a protective ground cable to the ground terminal of the lower aluminum flange.

(2) Installation category (overvoltage category)
According to UL508C 36.9.4.(C), this amplifier is designed to fall into installation category (overvoltage category) III, so a surge absorber must be installed in the power input section of the machine. (UL-compliant product, clamp voltage: 6 kV or lower between phases) For details of the installation of a surge absorber, see Appendix A.

(3) Pollution degree of the installation environment and protection class of the power magnetics cabinet

UL508C requires that when the machine is installed in the environment of ordinary plants, the power magnetics cabinet in which this amplifier is to be installed meet pollution degree class 2.
The αi series servo amplifiers are open type devices that are not equipped with a complete enclosure. If the power magnetics cabinet satisfies the above requirement, the degree of pollution inside the cabinet is considered to be class 2.
Insulation design of this amplifier assumes that the amplifier is installed in an environment with pollution degree 2.

When an external heat sink cooling type amplifier of which heat sink fin protrudes behind the mounting flange is used, the fin section must be in a cooling area (duct) conforming to around IP22 to IP33, and must be protected from being exposed to direct splashes of coolant, chips, and so forth.

5.5.2.2 Protection against electric shock

(1) Protection against direct contact with charged parts
This amplifier must be installed in a power magnetics cabinet. The power magnetics cabinet must be equipped with a lock so that when the power to the amplifier is on, the power magnetics cabinet cannot be opened by persons except special maintenance personnel or persons authorized to do maintenance work who have been sufficiently trained in prevention of electric shock.

If the operator of the machine needs to open the power magnetics cabinet for some operations, the operator must be given thorough safety training, or a protection cover must be provided to prevent the operator from touching the amplifier.

(2) Confirmation of discharge of the electrolytic capacitor (UL508C 21)
This amplifier includes a large-capacity electrolytic capacitor for the power smoothing circuit. Even after the power supply input circuit is shut off, this capacitor remains charged for a while.
When it becomes necessary to touch the amplifier to do maintenance work or for other purposes, wait until the discharge time indicated on the face plate of the amplifier is passed, or start work after ensuring safety by measuring the residual voltage of the DC link section with a volt-ohm meter and checking that the LED (red) indicating charging is turned off.

5.5.2.3 Protective grounding

Connect all of the protective ground terminals to the protective ground (PE) terminal in the power magnetics cabinet.
For how to connect a protective ground cable and its cable diameter, refer to Section 5.2, "GROUND" and Subsection, “Details of cable K70”.
Note that connecting a cable terminal to a protective ground point is not permitted.

5.5.2.4 Overload protection

The αi SP and αi SV are equipped with an overload protection feature.
In the αi SP, the protection feature works when the maximum output continues for 30 s or longer.
In the αi SV, the protection feature works when the current level becomes 1.3 times as high as the rated current of the motor.

5.5.2.5 External overload protection device

The servo amplifier is not equipped with a special protection device. To protect conductors, pay attention to the specifications of the power supply unit.

5.5.2.6 Short-circuit protection

The 200-V input αi series servo amplifiers are suitable for use with a power supply facility with 85,000 Arms or less/240 V (max).
The 400-V input αi series servo amplifiers are suitable for use with a power supply facility with 85,000 Arms or less//480 V (max).

5.5.2.7 Over-speed protection

The αi series servo amplifiers are not equipped with an over-speed protection device.

5.5.2.8 24-V power supply

Normally, the power for controlling the αi SV and αi SP is supplied from the αi PS. When supplying the power from another external power supply, use a class 2 power supply. The class 2 power supply uses a transformer and other parts that are proven safety. For details, contact the power supply manufacturer.

5.5.2.9 Screw tightening torque

The screws of the servo amplifier are tightened with the following torque:

Screw size	Tightening torque (Nm)
M4	1.1 to 1.5
M5	2.0 to 2.5
M6	3.5 to 4.5
M10	15 to 16

5.6 NOTES ON COOLANT (REFERENCE)

Coolant including highly active sulfur, oil-free coolant called synthetic coolant, and water-soluble strong alkali coolant particularly affect the CNC, motor, and amplifier. Even when they are protected from being exposed to direct splashes of such coolant, problems described below may occur. So, special care should be taken.

- Coolant including highly active sulfur
  Some of coolants including sulfur include extremely highly active sulfur. If such a coolant penetrates into the CNC, motor, or amplifier, it can corrode copper, silver and other metallic materials of components, therefore resulting in component failures.

- Infiltrative synthetic coolant
  Some of synthetic type coolants using polyalkylene glycol (PAG) as a lubricant component have extremely high infiltration. Such coolants easily penetrate into a motor even if it is well closed. When this kind of coolant penetrates into the CNC, motor, or amplifier, it can lead to insulation degrading and component failures.

- Water-soluble strong alkali coolant
  Some of coolants using alkanolamine to increase the pH level are so strongly alkaline that an alkalinity of pH10 or more is measured when diluted by the standard ratio. If such a coolant penetrates into the CNC, motor, or amplifier, it can cause a chemical reaction with plastic or other materials, therefore degrading the materials.

6 HEAT DISSIPATION

Chapter 6, "HEAT DISSIPATION", consists of the following sections:

6.1 200-V INPUT SERIES 128
6.1.1 αi PS series.....128
6.1.2 αi SV series.....129
6.1.3 αi SP series.....133
6.2 400-V INPUT SERIES 134
6.2.1 αi PS series.....134
6.2.2 αi SV series.....135
6.2.3 αi SP series.....139

6.1 200-V INPUT SERIES

The amount of heat dissipation by each module of the servo amplifier αi series is described below.

6.1.1 αi PS series

Table 6.1.1(a) αi PS

Name	Rated output	Total amount of heat dissipation	Residual amount of heat in the cabinet
αi PS 5.5	5.5kW	100W	53W
αi PS 11	11kW	158W	53W
αi PS 15	15kW	333W	61W
αi PS 26	26kW	597W	75W
αi PS 30	30kW	681W	79W
αi PS 37	37kW	706W	81W
αi PS 55	45kW	921W	91W
	55kW	1115W	101W

Table 6.1.1(b) AC reactor for αi PS

Name	Ordering number	Rated output	Total amount of heat dissipation
For αi PS 5.5	A81L-0001-0155	5.5kW	16W
For αi PS 11		11kW	38W
For αi PS 15	A81L-0001-0156	15kW	50W
For αi PS 26	A81L-0001-0157	26kW	70W
For αi PS 30	A81L-0001-0158	30kW	65W
For αi PS 37	A81L-0001-0159	37kW	55W
For αi PS 55	A81L-0001-0160	55kW	79W
For αi PS 5.5	A81L-0001-0170	2.2kW	35W

Table 6.1.1(c) αi PS_R

Name	Ordering number	Rated output	Total amount of heat dissipation	Residual amount of heat in the cabinet
αi PS_R3	A06B-6115-H003	3kW	60W	60W
αi PS_R 5.5	A06B-6115-H006	5.5kW	105W	55W
		7.5kW	130W	60W

Table 6.1.1(d) AC line filter for αi PS_R

Name	Ordering number	Rated output	Total amount of heat dissipation
αi PS_R3	A81L-0001-0083#3C	2.0kW	10W
	A81L-0001-0171	3.0kW	15W
αi PS_R 5.5	A81L-0001-0101#C	5.5kW	40W
		7.5kW	50W

6.1.2 αi SV series

The amount of heat dissipation by the αi SV depends on the αi SV model and the current that flows through the servo motor. For the current that flows through a servo motor, reference the continuous rated current of each servo motor. (For the continuous rated current of each servo motor, refer to the servo motor descriptions. For servo motors, the continuous rated current is referred to as the stall current.) As the current that flows through a servo motor, the root-mean-square value of the current that flows through an actual servo motor on a machine can be used.

(1) Total amount of heat dissipation
The total amount of heat dissipation by the αi SV is calculated according to the following expression:

Total amount of heat dissipation
= a + Ka1 × b1 + Ka2 × b2 + Ka3 × b3
a : Amount of heat dissipation determined by the αi SV model [W]
Ka1 : Coefficient determined by the αi SV [W/Arms]
b1 : Current flowing through the servo motor [Arms]
Ka2 : Coefficient determined by the αi SV [W/Arms]
b2 : Current flowing through the servo motor [Arms]
Ka3 : Coefficient determined by the αi SV [W/Arms]
b3 : Current flowing through the servo motor [Arms]

αi SV 1-axis (Total amount of heat dissipation)

Name	Specification	a [W]	Axis	K [W/Arms]		
				HRV2	HRV3	HRV4
αi SV 4	H101	13	L	5.0	6.5	-
αi SV 20	H103	13	L	5.0	6.5	-
αi SV 40	H104	13	L	4.6	5.9	-
αi SV 80	H105	13	L	4.3	5.8	-
αi SV 160	H106	17	L	4.7	6.1	-
αi SV 360	H109	25	L	4.9	5.8	7.9
αi SV 20L	H153	14	L	5.0	6.5	9.4
αi SV 40L	H154	14	L	4.6	5.9	8.4
αi SV 80L	H155	18	L	4.3	5.8	8.5
αi SV 160L	H156	16	L	4.7	6.1	8.8

αi SV 2-axis (Total amount of heat dissipation)

Name	Specification	a [W]	Axis	K [W/Arms]		
				HRV2	HRV3	HRV4
αi SV 4/4	H201	17	L	5.0	6.5	-
			M	5.0	6.5	-
αi SV 4/20	H203	17	L	5.0	6.5	-
			M	5.0	6.5	-
αi SV 20/20	H205	17	L	5.0	6.5	-
			M	5.0	6.5	-
αi SV 20/40	H206	17	L	5.0	6.5	-
			M	4.6	5.9	-
αi SV 40/40	H207	19	L	4.6	5.9	-
			M	4.6	5.9	-
αi SV 40/80	H208	19	L	4.6	5.9	-
			M	4.3	5.8	-
αi SV 80/80	H209	19	L	4.3	5.8	-
			M	4.3	5.8	-
αi SV 80/160	H210	19	L	4.3	5.8	-
			M	4.7	6.1	-
αi SV 160/160	H211	19	L	4.7	6.1	-
			M	4.7	6.1	-
αi SV 20/20L	H255	21	L	5.0	6.5	9.4
			M	5.0	6.5	9.4
αi SV 20/40L	H256	21	L	5.0	6.5	9.4
			M	4.6	5.9	8.4
αi SV 40/40L	H257	23	L	4.6	5.9	8.4
			M	4.6	5.9	8.4
αi SV 40/80L	H258	21	L	4.6	5.9	8.4
			M	4.3	5.8	8.5
αi SV 80/80L	H259	21	L	4.3	5.8	8.5
			M	4.3	5.8	8.5

αi SV 3-axis (Total amount of heat dissipation)

Name	Specification	a [W]	Axis	K [W/Arms]	
				HRV2	HRV3
αi SV 4/4/4	H301	24	L	5.0	6.5
			M	5.0	6.5
			N	5.0	6.5
αi SV 20/20/20	H303	24	L	5.0	6.5
			M	5.0	6.5
			N	5.0	6.5
αi SV 20/20/40	H304	24	L	5.0	6.5
			M	5.0	6.5
			N	4.6	5.9

(2) Residual amount of heat in the cabinet
By placing the heat sink section of the αi SV outside the cabinet, the residual amount of heat in the cabinet can be calculated according to the expression below.

Residual amount of heat in the cabinet
= a + Kb1 × b1 + Kb2 × b2 + Kb3 × b3

a : Amount of heat dissipation determined by the αi SV model [W]
Kb1 : Coefficient determined by the αi SV [W/Arms]
b1 : Current flowing through the servo motor [Arms]
Kb2 : Coefficient determined by the αi SV [W/Arms]
b2 : Current flowing through the servo motor [Arms]
Kb3 : Coefficient determined by the αi SV [W/Arms]
b3 : Current flowing through the servo motor [Arms]

αi SV 1-axis

Name	Specification	a [W]	Axis	K [W/Arms]		
				HRV2	HRV3	HRV4
αi SV 4	H101	13	L	5.0	6.5	-
αi SV 20	H103	13	L	5.0	6.5	-
αi SV 40	H104	13	L	0.92	1.18	-
αi SV 80	H105	13	L	0.86	1.16	-
αi SV 160	H106	17	L	0.47	0.61	-
αi SV 360	H109	25	L	0.25	0.33	0.4
αi SV 20L	H153	14	L	5.0	6.5	9.4
αi SV 40L	H154	14	L	0.92	1.18	1.68
αi SV 80L	H155	18	L	0.43	0.58	0.85
αi SV 160L	H156	16	L	0.47	0.61	0.88

αi SV 2-axis

Name	Specification	a [W]	Axis	K [W/Arms]		
				HRV2	HRV3	HRV4
αi SV 4/4	H201	17	L	5.0	6.5	-
			M	5.0	6.5	-
αi SV 4/20	H203	17	L	5.0	6.5	-
			M	5.0	6.5	-
αi SV 20/20	H205	17	L	5.0	6.5	-
			M	5.0	6.5	-
αi SV 20/40	H206	17	L	1.0	1.3	-
			M	0.92	1.18	-
αi SV 40/40	H207	19	L	0.46	0.59	-
			M	0.46	0.59	-
αi SV 40/80	H208	19	L	0.46	0.59	-
			M	0.43	0.58	-
αi SV 80/80	H209	19	L	0.43	0.58	-
			M	0.43	0.58	-
αi SV 80/160	H210	19	L	0.43	0.58	-
			M	0.47	0.61	-
αi SV 160/160	H211	19	L	0.47	0.61	-
			M	0.47	0.61	-
αi SV 20/20L	H255	21	L	1.0	1.3	1.88
			M	1.0	1.3	1.88
αi SV 20/40L	H256	21	L	0.5	0.65	0.94
			M	0.46	0.59	0.84
αi SV 40/40L	H257	23	L	0.46	0.59	0.84
			M	0.46	0.59	0.84
αi SV 40/80L	H258	21	L	0.46	0.59	0.84
			M	0.43	0.58	0.85
αi SV 80/80L	H259	21	L	0.43	0.58	0.85
			M	0.43	0.58	0.85

αi SV 3-axis

Name	Specification	a [W]	Axis	K [W/Arms]	
				HRV2	HRV3
αi SV 4/4/4	H301	24	L	5.0	6.5
			M	5.0	6.5
			N	5.0	6.5
αi SV 20/20/20	H303	24	L	5.0	6.5
			M	5.0	6.5
			N	5.0	6.5
αi SV 20/20/40	H304	24	L	5.0	6.5
			M	5.0	6.5
			N	0.92	1.18

6.1.3 αi SP series

Table 6.1.3(a) αi SP

Name	Rated output (Note 1)	Total amount of heat dissipation	Residual amount of heat in the cabinet
αi SP2.2	1.5kW	75W	37W
αi SP 5.5	2.2kW	112W	36W
	3.7kW	120W	36W
αi SP 11	5.5kW	171W	41W
	7.5kW	218W	44W
αi SP 15	11kW	273W	45W
αi SP 22	15kW	435W	53W
	18.5kW	515W	57W
αi SP 26	22kW	684W	62W
αi SP 30	26kW	739W	65W
αi SP 37	26kW	739W	65W
αi SP 45	30kW	911W	75W
	37kW	1123W	85W
αi SP 55	45kW	1360W	98W

NOTE
1 "Rated output" indicates the continuous rated output of the motor.
2 The indicated amounts of heat dissipation assume the use of αi I series spindle motor.

6.2 400-V INPUT SERIES

The amount of heat dissipation by each amplifier of the 400-V input αi series servo amplifier is described below.

6.2.1 αi PS series

Table 6.2.1(a) αi PS

Name	Rated output	Total amount of heat dissipation	Residual amount of heat in the cabinet
αi PS 11HV	11kW	136W	51W
αi PS 18HV	18kW	274W	57W
αi PS 30HV	30kW	380W	64W
αi PS 45HV	30kW	394W	64W
	37kW	475W	68W
	45kW	567W	75W
αi PS 75HV	60kW	600W	75W
	75kW	738W	82W
αi PS 100HV	100kW	1380W	110W

Table 6.2.1(b) AC reactor for αi PS

Name	Ordering number	Rated output	Total amount of heat dissipation
For αi PS 11HV	A81L-0001-0163	11kW	38W
For αi PS 18HV		18kW	70W
For αi PS 30HV	A81L-0001-0164	30kW	60W
For αi PS 45HV		45kW	100W
For αi PS 75HV	A81L-0001-0165	75kW	120W
For αi PS 100HV		100kW	180W
For αi PS 11HV	A81L-0001-0167	11kW	55W

6.2.2 αi SV series

The amount of heat dissipation by the αi SV depends on the αi SV model and the current that flows through the servo motor. For the current that flows through a servo motor, reference the continuous rated current of each servo motor. (For the continuous rated current of each servo motor, refer to the servo motor descriptions.) As the current that flows through a servo motor, the root-mean-square value of the current that flows through an actual servo motor on a machine can be used.

(1) Total amount of heat dissipation
The total amount of heat dissipation by the αi SV is calculated according to the following expression:

Total amount of heat dissipation = a + Ka1 × b1 + Ka2 × b2

a : Amount of heat dissipation determined by the αi SV model [W]
Ka1 : Coefficient determined by the αi SV [W/Arms]
b1 : Current flowing through the servo motor [Arms]
Ka2 : Coefficient determined by the αi SV [W/Arms]
b2 : Current flowing through the servo motor [Arms]

αi SV 1-axis (Total amount of heat dissipation)

Name	Specification	a [W]	Axis	K [W/Arms]		
				HRV2	HRV3	HRV4
αi SV 10HV	H102	13	L	8.2	14.8	-
αi SV 20HV	H103	13	L	8.8	14.5	-
αi SV 40HV	H104	13	L	8.8	15.3	-
αi SV 80HV	H105	17	L	9.0	12.3	-
αi SV 180HV	H106	25	L	8.8	12.3	23.4
αi SV 360HV	H109	34	L	7.8	11.0	18.2
αi SV 10HVL	H152	14	L	8.2	14.8	26.4
αi SV 20HVL	H153	14	L	8.8	14.5	25.2
αi SV 40HVL	H154	18	L	8.8	15.3	27.2
αi SV 80HV	H155	16	L	9.0	12.3	23.7

αi SV 2-axis (Total amount of heat dissipation)

Name	Specification	a [W]	Axis	K [W/Arms]		
				HRV2	HRV3	HRV4
αi SV 10/10HV	H202	17	L	8.2	14.8	-
			M	8.2	14.8	-
αi SV 20/20HV	H205	17	L	8.8	14.5	-
			M	8.8	14.5	-
αi SV 20/40HV	H206	19	L	8.8	14.5	-
			M	8.8	15.3	-
αi SV 40/40HV	H207	19	L	8.8	15.3	-
			M	8.8	15.3	-
αi SV 40/80HV	H208	19	L	8.8	15.3	-
			M	9.0	12.3	-
αi SV 80/80HV	H209	19	L	9.0	12.3	-
			M	9.0	12.3	-
αi SV 10/10HVL	H252	19	L	8.2	14.8	26.4
			M	8.2	14.8	26.4
αi SV 20/20HVL	H255	21	L	8.8	14.5	25.2
			M	8.8	14.5	25.2
αi SV 20/40HVL	H256	21	L	8.8	14.5	25.2
			M	8.8	15.3	27.2
αi SV 40/40HVL	H257	21	L	8.8	15.3	27.2
			M	8.8	15.3	27.2

(2) Residual amount of heat in the cabinet
By placing the heat sink section of the αi SV outside the cabinet, the residual amount of heat in the cabinet can be calculated according to the expression below.

Residual amount of heat in the cabinet
= a + Kb1 × b1 + Kb2 × b2

a : Amount of heat dissipation determined by the αi SV model [W]
Kb1 : Coefficient determined by the αi SV [W/Arms]
b1 : Current flowing through the servo motor [Arms]
Kb2 : Coefficient determined by the αi SV [W/Arms]
b2 : Current flowing through the servo motor [Arms]

αi SV 1-axis (Residual amount of heat in the cabinet)

Name	Specification	a [W]	Axis	K [W/Arms]		
				HRV2	HRV3	HRV4
αi SV 10HV	H102	13	L	8.2	14.8	-
αi SV 20HV	H103	13	L	1.76	2.9	-
αi SV 40HV	H104	13	L	1.76	2.9	-
αi SV 80HV	H105	17	L	0.90	1.23	-
αi SV 180HV	H106	25	L	0.44	0.62	1.17
αi SV 360HV	H109	34	L	7.8	11	18.2
αi SV 10HVL	H152	14	L	1.64	1.53	2.64
αi SV 20HVL	H153	14	L	0.88	1.53	2.52
αi SV 40HVL	H154	18	L	0.88	1.53	2.72
αi SV 80HV	H155	16	L	0.90	1.23	2.37

αi SV 2-axis (Residual amount of heat in the cabinet)

Name	Specification	a [W]	Axis	K [W/Arms]		
				HRV2	HRV3	HRV4
αi SV 10/10HV	H202	17	Ka1	8.2	14.8	-
			Ka2	8.2	14.8	-
αi SV 20/20HV	H205	17	Ka1	1.76	2.9	-
			Ka2	1.76	2.9	-
αi SV 20/40HV	H206	19	Ka1	0.88	1.45	-
			Ka2	0.88	1.53	-
αi SV 40/40HV	H207	19	Ka1	0.88	1.53	-
			Ka2	0.88	1.53	-
αi SV 40/80HV	H208	19	Ka1	0.88	1.53	-
			Ka2	0.90	1.23	-
αi SV 80/80HV	H209	19	Ka1	0.90	1.23	-
			Ka2	0.90	1.23	-
αi SV 10/10HVL	H252	19	Ka1	0.82	1.48	2.64
			Ka2	0.82	1.48	2.64
αi SV 20/20HVL	H255	21	Ka1	0.88	1.45	2.52
			Ka2	0.88	1.45	2.52
αi SV 20/40HVL	H256	21	Ka1	0.88	1.45	2.52
			Ka2	0.88	1.53	2.37
αi SV 40/40HVL	H257	21	Ka1	0.88	1.53	2.37
			Ka2	0.88	1.53	2.37

6.2.3 αi SP series

Table 6.2.3 αi SP

Name	Rated output (Note 1)	Total amount of heat dissipation	Residual amount of heat in the cabinet
αi SP 5.5HV	0.55kW	26W	18W
	1.5kW	44W	22W
	2.2kW	59W	24W
	3.7kW	87W	29W
αi SP 11HV	5.5kW	122W	37W
	7.5kW	156W	39W
αi SP 15HV	11kW	189W	40W
αi SP 30HV	15kW	247W	41W
	22kW	349W	45W
αi SP 45HV	30kW	482W	52W
	37kW	588W	57W
αi SP 75HV	60kW	1264W	91W
αi SP 100HV	100kW	2100W	150W

NOTE
1 "Rated output" indicates the continuous rated output of the motor.
2 The indicated amounts of heat dissipation assume the use of αi I series spindle motor.

7 COOLING

The αi series has a built-in fan for external fin cooling, so that external forced air cooling is unnecessary.
To maintain cooling efficiency, be sure to provide maintenance areas as described in Section 8.1.

8 EXTERNAL DIMENSIONS AND MAINTENANCE AREA

Chapter 8 "EXTERNAL DIMENSIONS AND MAINTENANCE AREA", consists of the following sections:

8.1 OUTLINE DRAWINGS 142
8.1.1 Outline Drawings of Amplifiers, Panel Cut-out, and Maintenance Area 142
8.1.2 AC Reactor Unit 148
8.1.3 AC Line Filter 158
8.1.4 Power Transformer 159
8.1.5 Regenerative Discharge Unit 165
8.1.6 Dynamic Brake Module (DBM) 168
8.1.7 Circuit Breaker 170
8.1.8 Magnetic Contactors 172
8.1.9 Lightning Surge Protector 179
8.1.10 Noise Filter 182
8.2 PANEL CUT-OUT DIAGRAMS 185

8.1 OUTLINE DRAWINGS

8.1.1 Outline Drawings of Amplifiers, Panel Cut-out, and Maintenance Area

(1) αi PS series

Model			Outline drawing	Panel cut-out	Maintenance area	Internal fan*1	Internal fan*2	External fan
Power regeneration type	200-V input series	αi PS 5.5	Outline drawing 2	Panel cut-out 2	Maintenance area 1	Provided	-	-
		αi PS 11	Outline drawing 3	Panel cut-out 3	Maintenance area 2	Provided	-	Provided
		αi PS 15	Outline drawing 3	Panel cut-out 3	Maintenance area 2	Provided	-	Provided
		αi PS 26	Outline drawing 4	Panel cut-out 4	Maintenance area 3	Provided	-	Provided
		αi PS 30	Outline drawing 4	Panel cut-out 4	Maintenance area 3	Provided	-	Provided
		αi PS 37	Outline drawing 4	Panel cut-out 4	Maintenance area 3	Provided	-	Provided
		αi PS 55	Outline drawing 5	Panel cut-out 5	Maintenance area 4	Provided	Provided	Provided
	400-V input series	αi PS 11HV	Outline drawing 3	Panel cut-out 3	Maintenance area 2	Provided	-	Provided
		αi PS 18HV	Outline drawing 3	Panel cut-out 3	Maintenance area 2	Provided	-	Provided
		αi PS 30HV	Outline drawing 4	Panel cut-out 4	Maintenance area 3	Provided	Provided	Provided
		αi PS 45HV	Outline drawing 4	Panel cut-out 4	Maintenance area 3	Provided	Provided	Provided
		αi PS 75HV	Outline drawing 5	Panel cut-out 5	Maintenance area 4	Provided	Provided	Provided
		αi PS 100HV	Outline drawing 5	Panel cut-out 5	Maintenance area 4	Provided	Provided	Provided
Resistance regeneration type	200-V input series	αi PS_R 3	Outline drawing 1	Panel cut-out 1	Maintenance area 1	-	Provided	-
		αi PS_R 5.5	Outline drawing 2	Panel cut-out 2	Maintenance area 1	-	Provided	-

*1 Internal cooling fan *2 Radiator cooling fan

(2) αi SV series

Model			Outline drawing	Panel cut-out	Maintenance area	Internal fan	External fan
200-V input series	1-axis	αi SV 4	Outline drawing 1	Panel cut-out 1	Maintenance area 1	Provided	-
		αi SV 20	Outline drawing 1	Panel cut-out 1	Maintenance area 1	Provided	-
		αi SV 80	Outline drawing 2	Panel cut-out 2	Maintenance area 1	Provided	-
		αi SV 160	Outline drawing 2	Panel cut-out 2	Maintenance area 1	Provided	Provided
		αi SV 360	Outline drawing 4	Panel cut-out 4	Maintenance area 3	Provided	Provided
		αi SV 20L	Outline drawing 2	Panel cut-out 2	Maintenance area 1	Provided	-
		αi SV 40L	Outline drawing 2	Panel cut-out 2	Maintenance area 1	Provided	-
		αi SV 80L	Outline drawing 2	Panel cut-out 2	Maintenance area 1	Provided	Provided
		αi SV 160L	Outline drawing 3	Panel cut-out 3	Maintenance area 2	Provided	Provided
	2-axis	αi SV 4/4	Outline drawing 1	Panel cut-out 1	Maintenance area 1	Provided	-
		αi SV 4/20	Outline drawing 1	Panel cut-out 1	Maintenance area 1	Provided	-
		αi SV 20/20	Outline drawing 1	Panel cut-out 1	Maintenance area 1	Provided	-
		αi SV 20/40	Outline drawing 2	Panel cut-out 2	Maintenance area 1	Provided	-
		αi SV 40/40	Outline drawing 2	Panel cut-out 2	Maintenance area 1	Provided	Provided
		αi SV 40/80	Outline drawing 2	Panel cut-out 2	Maintenance area 1	Provided	Provided
		αi SV 80/80	Outline drawing 2	Panel cut-out 2	Maintenance area 1	Provided	Provided
		αi SV 80/160	Outline drawing 3	Panel cut-out 3	Maintenance area 2	Provided	Provided
		αi SV 160/160	Outline drawing 3	Panel cut-out 3	Maintenance area 2	Provided	Provided
		αi SV 20/20L	Outline drawing 2	Panel cut-out 2	Maintenance area 1	Provided	-
		αi SV 20/40L	Outline drawing 2	Panel cut-out 2	Maintenance area 1	Provided	Provided
		αi SV 40/40L	Outline drawing 2	Panel cut-out 2	Maintenance area 1	Provided	Provided
		αi SV 40/80L	Outline drawing 3	Panel cut-out 3	Maintenance area 2	Provided	Provided
		αi SV 80/80L	Outline drawing 3	Panel cut-out 3	Maintenance area 2	Provided	Provided
	3-axis	αi SV 4/4/4	Outline drawing 1	Panel cut-out 1	Maintenance area 1	Provided	-
		αi SV 20/20/20	Outline drawing 1	Panel cut-out 1	Maintenance area 1	Provided	-
		αi SV 20/20/40	Outline drawing 2	Panel cut-out 2	Maintenance area 1	Provided	-
400-V input series	1-axis	αi SV 10HV	Outline drawing 1	Panel cut-out 1	Maintenance area 1	Provided	-
		αi SV 20HV	Outline drawing 2	Panel cut-out 2	Maintenance area 1	Provided	-
		αi SV 40HV	Outline drawing 2	Panel cut-out 2	Maintenance area 1	Provided	-
		αi SV 80HV	Outline drawing 2	Panel cut-out 2	Maintenance area 1	Provided	Provided
		αi SV 180HV	Outline drawing 4	Panel cut-out 4	Maintenance area 3	Provided	Provided
		αi SV 360HV	Outline drawing 5	Panel cut-out 5	Maintenance area 4	Provided	Provided
		αi SV 10HVL	Outline drawing 2	Panel cut-out 2	Maintenance area 1	Provided	-
		αi SV 20HVL	Outline drawing 2	Panel cut-out 2	Maintenance area 1	Provided	Provided
		αi SV 40HVL	Outline drawing 2	Panel cut-out 2	Maintenance area 1	Provided	Provided
		αi SV 80HVL	Outline drawing 3	Panel cut-out 3	Maintenance area 2	Provided	Provided
	2-axis	αi SV 10/10HV	Outline drawing 1	Panel cut-out 1	Maintenance area 1	Provided	-
		αi SV 20/20HV	Outline drawing 2	Panel cut-out 2	Maintenance area 1	Provided	-
		αi SV 20/40HV	Outline drawing 3	Panel cut-out 3	Maintenance area 2	Provided	Provided
		αi SV 40/40HV	Outline drawing 3	Panel cut-out 3	Maintenance area 2	Provided	Provided
		αi SV 40/80HV	Outline drawing 3	Panel cut-out 3	Maintenance area 2	Provided	Provided
		αi SV 80/80HV	Outline drawing 3	Panel cut-out 3	Maintenance area 2	Provided	Provided
		αi SV 10/10HVL	Outline drawing 2	Panel cut-out 2	Maintenance area 1	Provided	–
		αi SV 20/20HVL	Outline drawing 3	Panel cut-out 3	Maintenance area 2	Provided	Provided
		αi SV 20/40HVL	Outline drawing 3	Panel cut-out 3	Maintenance area 2	Provided	Provided
		αi SV 40/40HVL	Outline drawing 3	Panel cut-out 3	Maintenance area 2	Provided	Provided

(3) αi SP series

Model			Outline drawing	Panel cut-out	Maintenance area	Internal fan	External fan
αi series	200-V input series	αi SP 2.2	Outline drawing 2	Panel cut-out 2	Maintenance area 1	Provided	-
		αi SP 5.5	Outline drawing 2	Panel cut-out 2	Maintenance area 1	Provided	Provided
		αi SP 11	Outline drawing 3	Panel cut-out 3	Maintenance area 2	Provided	Provided
		αi SP 15	Outline drawing 3	Panel cut-out 3	Maintenance area 2	Provided	Provided
		αi SP 22	Outline drawing 4	Panel cut-out 4	Maintenance area 3	Provided	Provided
		αi SP 26	Outline drawing 4	Panel cut-out 4	Maintenance area 3	Provided	Provided
		αi SP 30	Outline drawing 4	Panel cut-out 4	Maintenance area 3	Provided	Provided
		αi SP 37	Outline drawing 4	Panel cut-out 4	Maintenance area 3	Provided	Provided
		αi SP 45	Outline drawing 5	Panel cut-out 5	Maintenance area 4	Provided	Provided
		αi SP 55	Outline drawing 5	Panel cut-out 5	Maintenance area 4	Provided	Provided
	400-V input series	αi SP 5.5HV	Outline drawing 2	Panel cut-out 2	Maintenance area 1	Provided	Provided
		αi SP 11HV	Outline drawing 3	Panel cut-out 3	Maintenance area 2	Provided	Provided
		αi SP 15HV	Outline drawing 3	Panel cut-out 3	Maintenance area 2	Provided	Provided
		αi SP 30HV	Outline drawing 4	Panel cut-out 4	Maintenance area 3	Provided	Provided
		αi SP 45HV	Outline drawing 4	Panel cut-out 4	Maintenance area 3	Provided	Provided
		αi SP 75HV	Outline drawing 5	Panel cut-out 5	Maintenance area 4	Provided	Provided
		αi SP 100HV	Outline drawing 5	Panel cut-out 5	Maintenance area 4	Provided	Provided

(4) Amplifier outline drawings

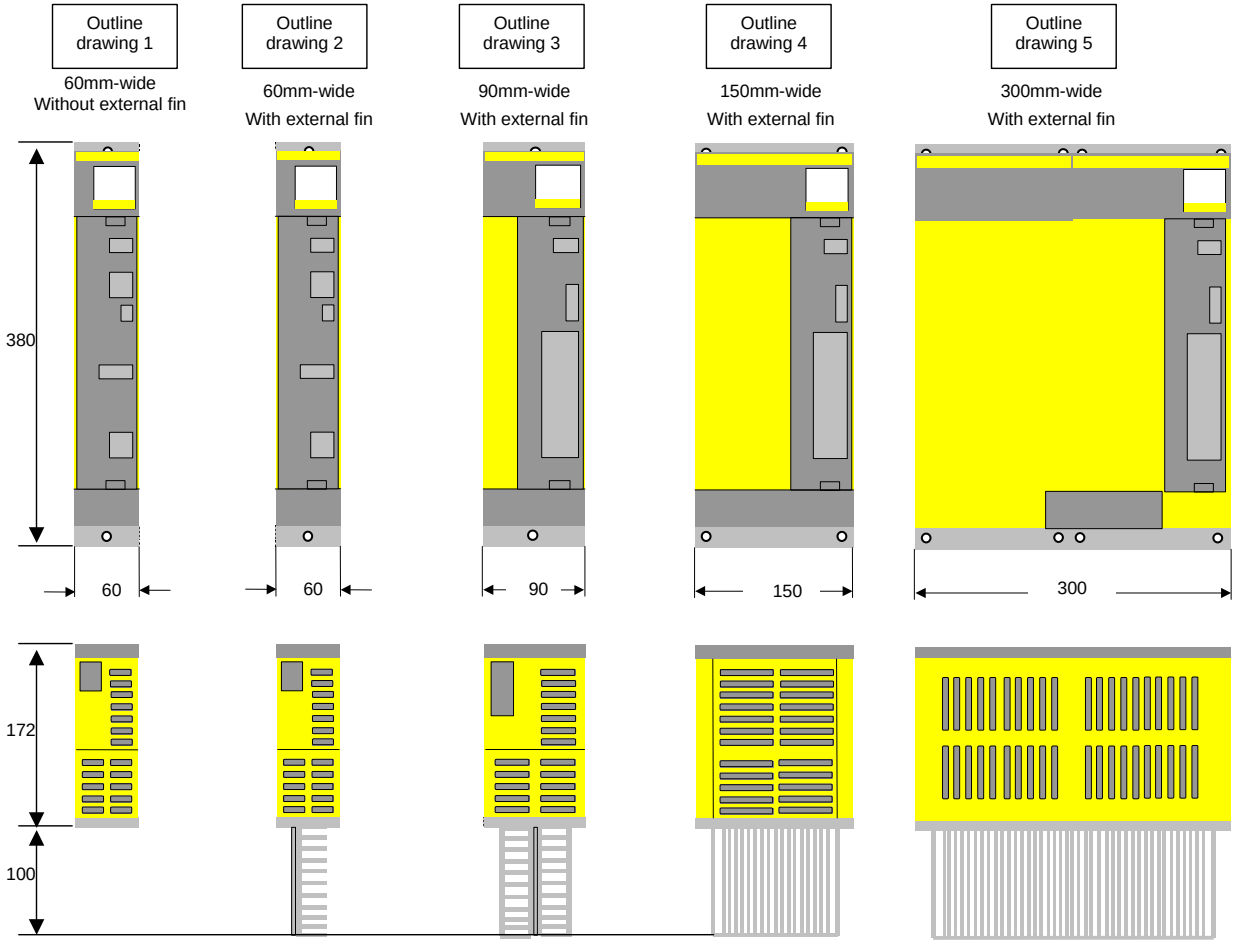

(5) Panel cut-out drawings

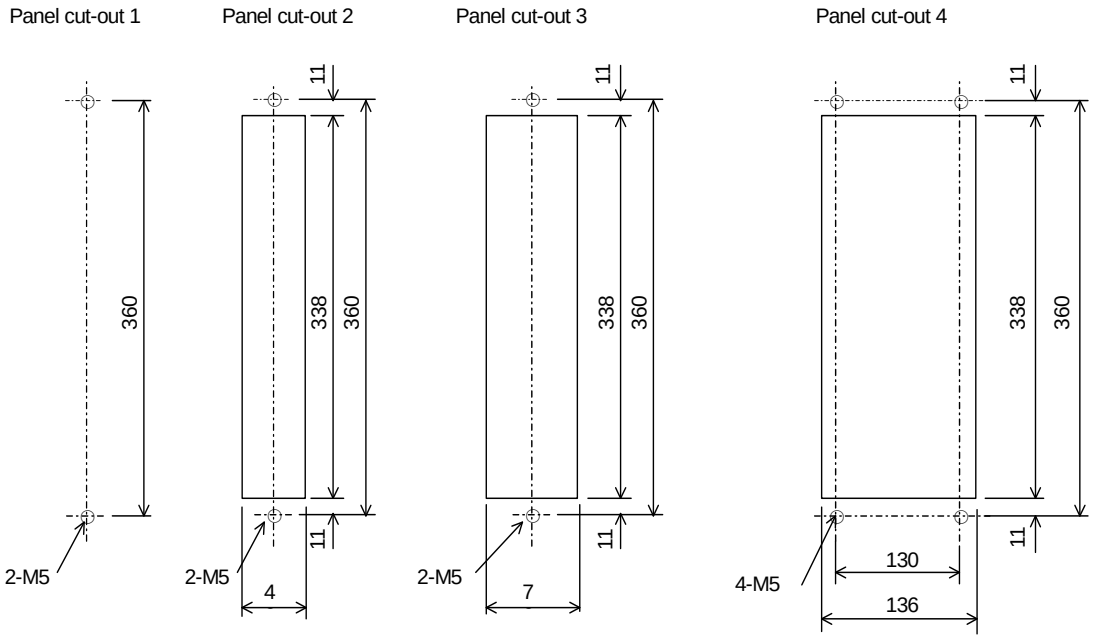

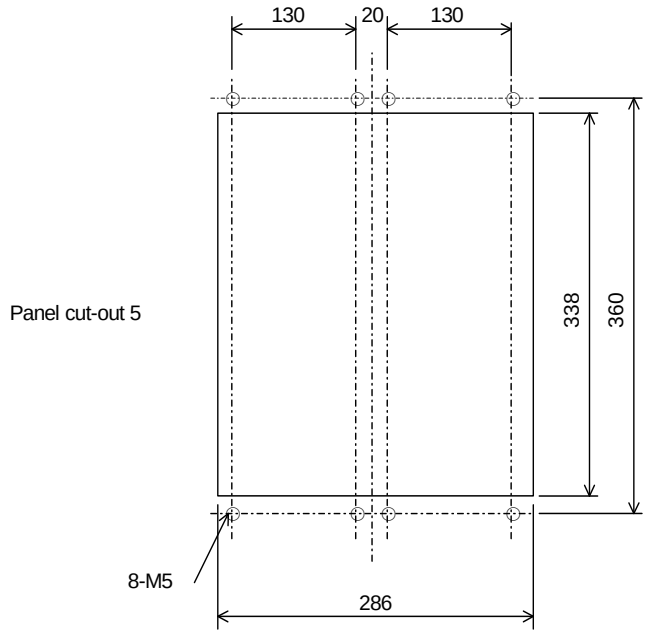

See Section 8.2 for details.

(6) Maintenance area drawings

An amplifier contains a fan motor for internal stirring. To allow air to flow and make replacement of a fan unit easy, be sure to reserve the shaded areas shown in the figure below.

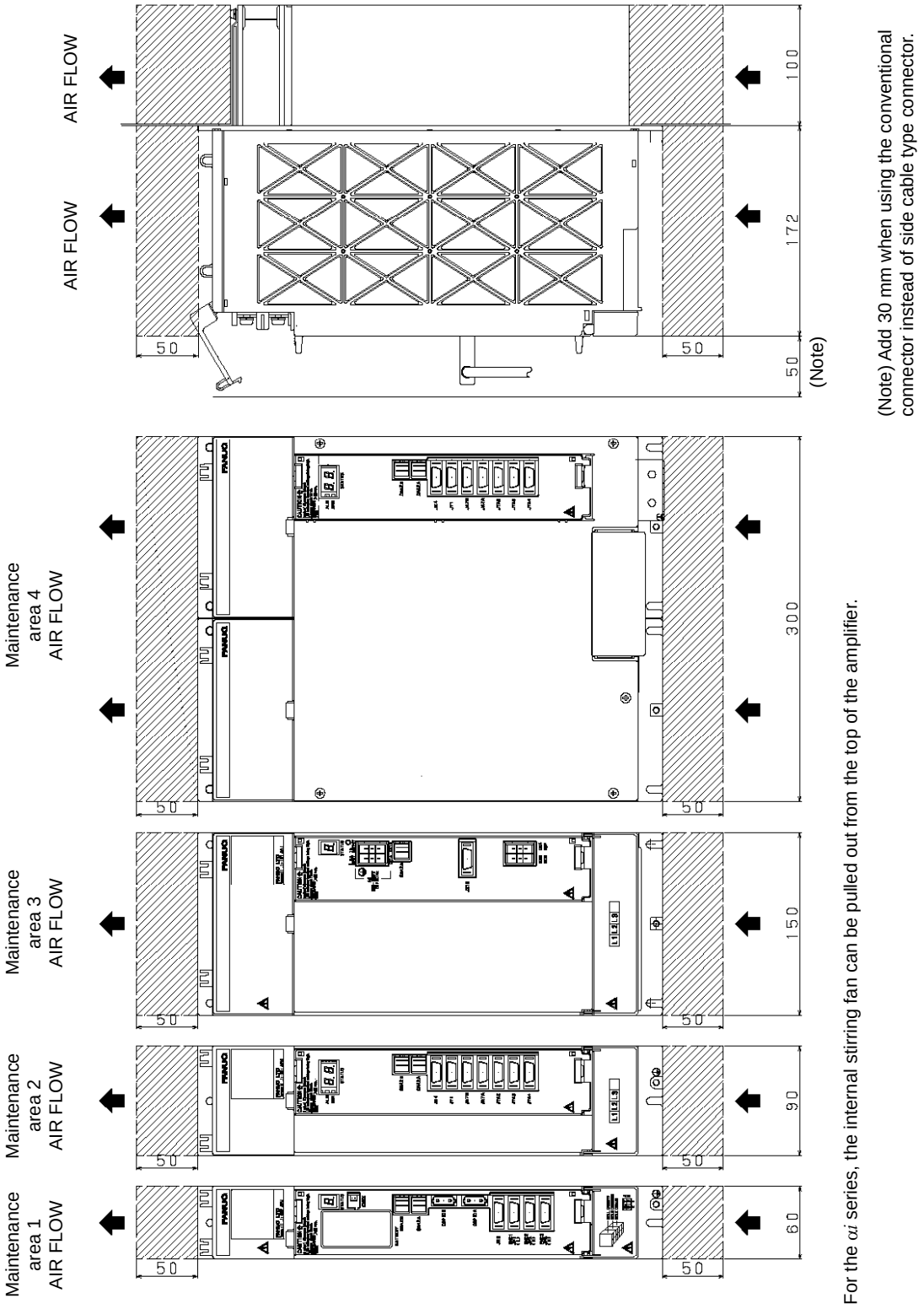

(Note) Add 30 mm when using the conventional connector instead of side cable type connector.

For the αi series, the internal stirring fan can be pulled out from the top of the amplifier.

8.1.2 AC Reactor Unit

(a) A81L-0001-0155

There are two types of shapes under the same specification drawing number. Both types use the same mounting pitches and other dimensions for mounting.
Specifying shape (1) or (2) is not possible.

Shape (1)

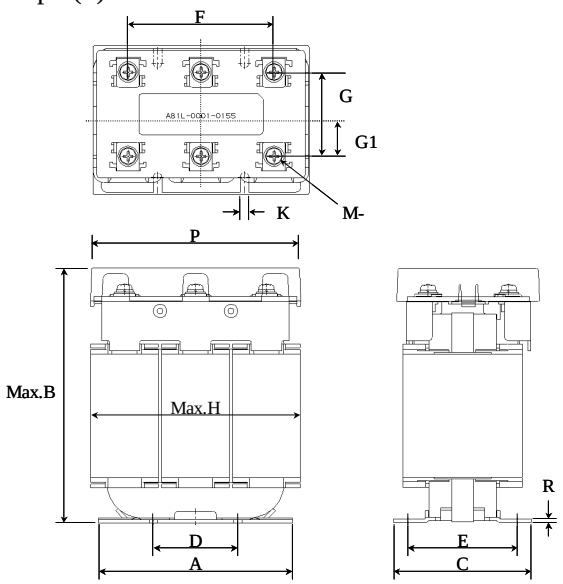

Shape (2)

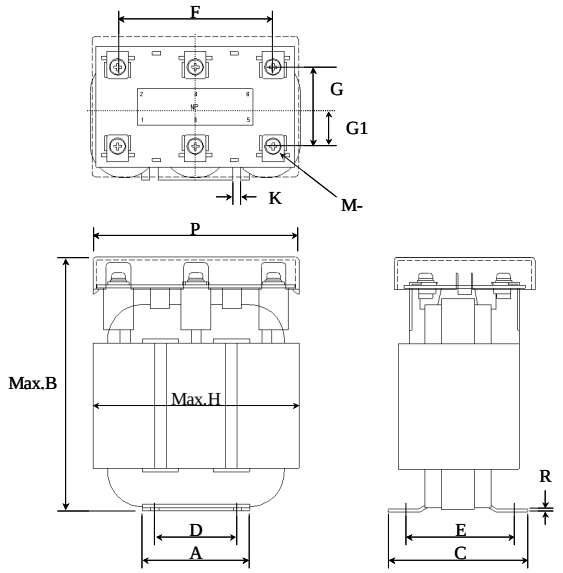

	A	B	C	D	E	F	G	G1	H	K	P	R	M
Shape (1)	115	155	82	50	65	84	48	20.5	135	5	135	2	M5
Shape (2)	65	155	85	50	65	94	48	20.5	127	5	125	2	M5

(b) A81L-0001-0156

There are two types of shapes under the same specification drawing number. Both types use the same mounting pitches and other dimensions for mounting.
Specifying shape (1) or (2) is not possible.

Shape (1)

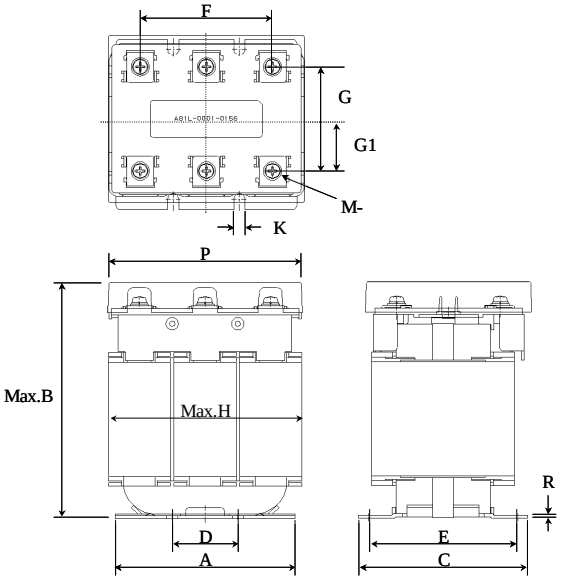

Shape (2)

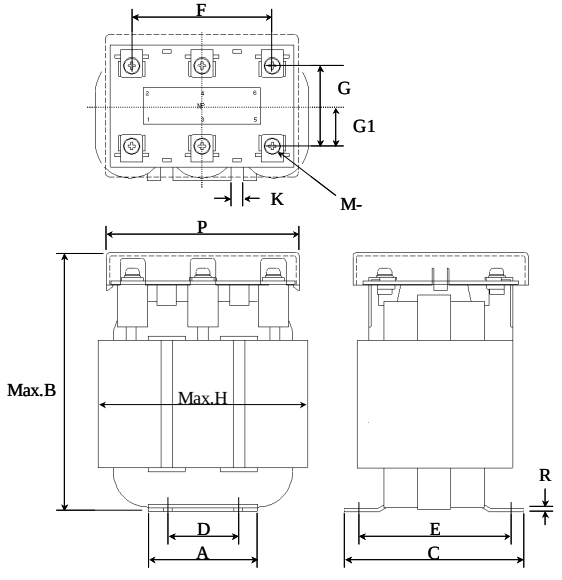

	A	B	C	D	E	F	G	G1	H	K	P	R	M
外形（1）	115	155	108	42	95	84	66	29.5	135	7.2	135	2	M5
外形（2）	65	155	107	42	95	84	66	29	131	7.2	115	2	M5

(c) A81L-0001-0157

There are two types of shapes under the same specification drawing number. Both types use the same mounting pitches and other dimensions for mounting.
Specifying shape (1) or (2) is not possible.

Shape (1)

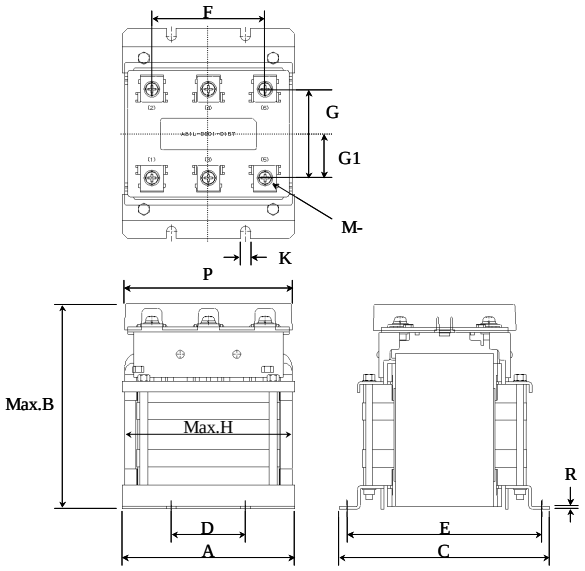

Shape (2)

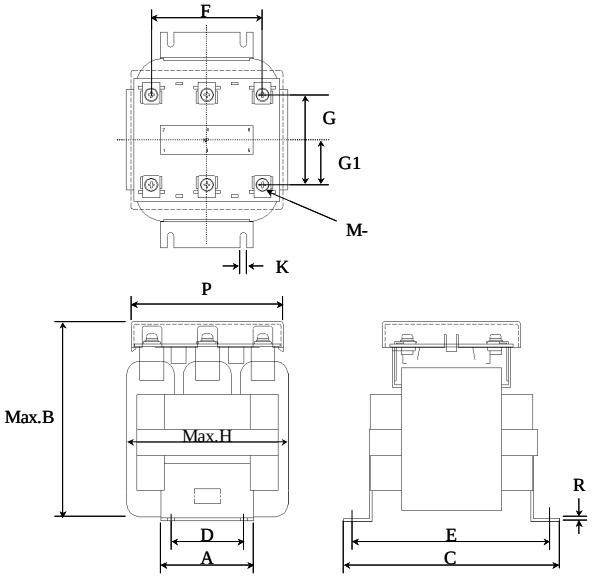

	A	B	C	D	E	F	G	G1	H	K	P	R	M
Shape (1)	128	155	165	55	145	84	66	33	135	7.2	135	2	M5
Shape (2)	70	155	165	55	145	84	66	33	135	7.2	115	2	M5

(d) A81L-0001-0158

There are two types of shapes under the same specification drawing number. Both types use the same mounting pitches and other dimensions for mounting.
Specifying shape (1) or (2) is not possible.

Shape (1)

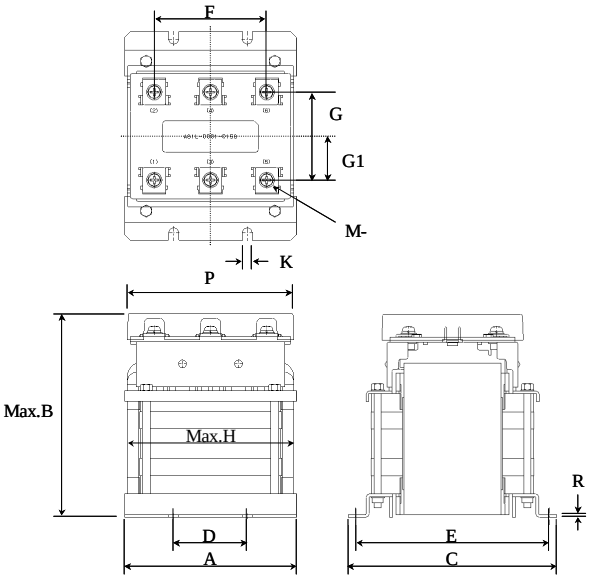

Shape (2)

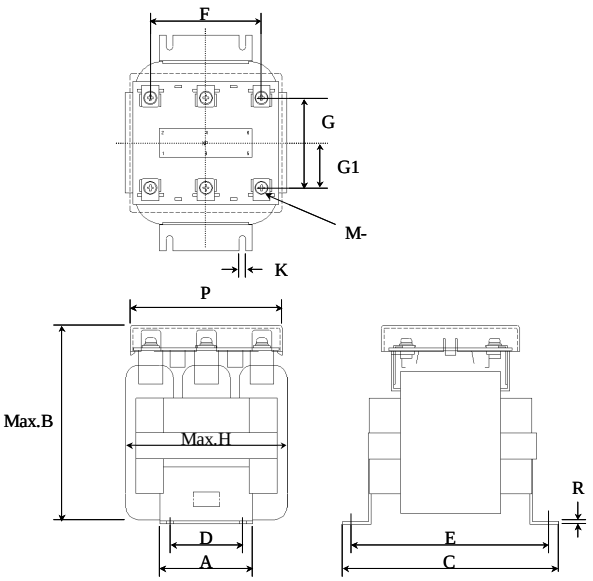

	A	B	C	D	E	F	G	G1	H	K	P	R	M
Shape (1)	128	155	165	55	145	84	66	33	135	7.2	135	2	M5
Shape (2)	70	155	165	55	145	84	66	33	135	7.2	115	2	M5

(e) A81L-0001-0159

There are two types of shapes under the same specification drawing number. Both types use the same mounting pitches and other dimensions for mounting.
Specifying shape (1) or (2) is not possible.

Shape (1)

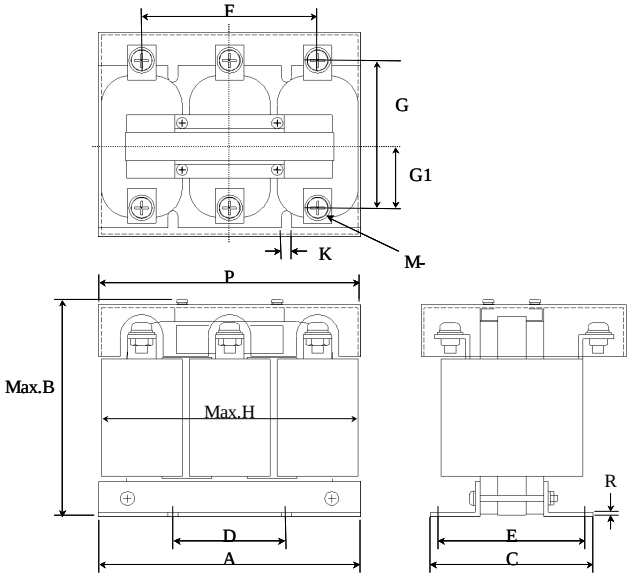

Shape (2)

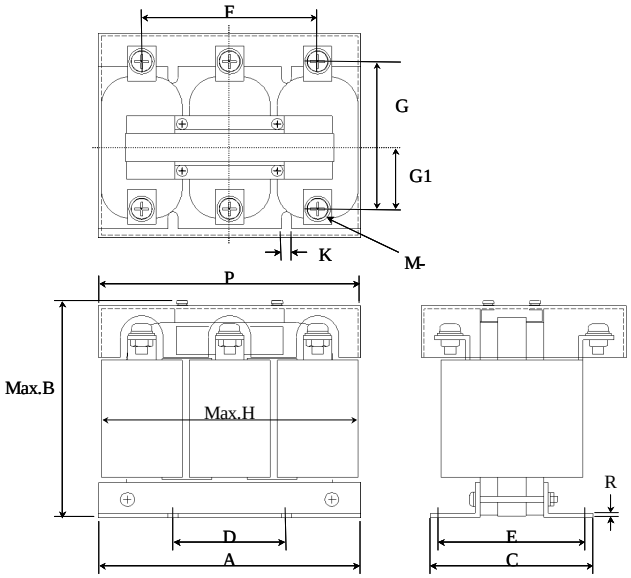

	A	B	C	D	E	F	G	G1	H	K	P	R	M
Shape (1)	185	160	115	80	100	124	105	44	185	7.2	185	2.6	M8
Shape (2)	184	160	115	80	100	124	95	38.5	185	7.2	185	2.6	M8

(f) A81L-0001-0160

There are two types of shapes under the same specification drawing number. Both types use the same mounting pitches and other dimensions for mounting.
Specifying shape (1) or (2) is not possible.

Shape (1)

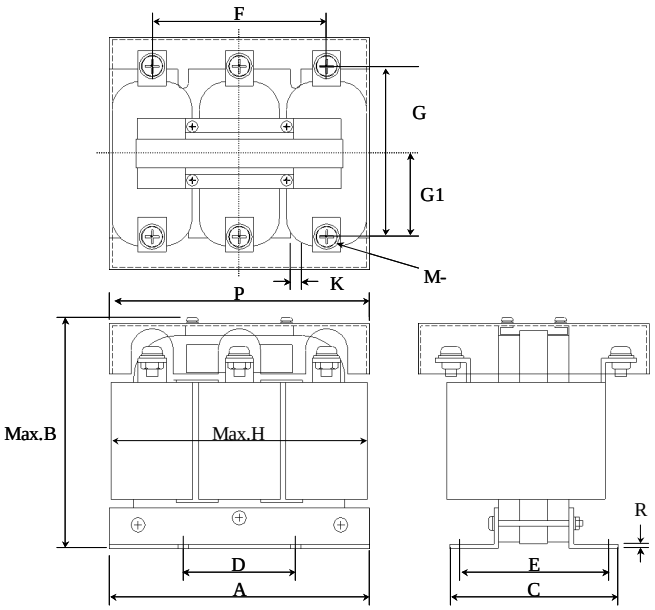

Shape (2)

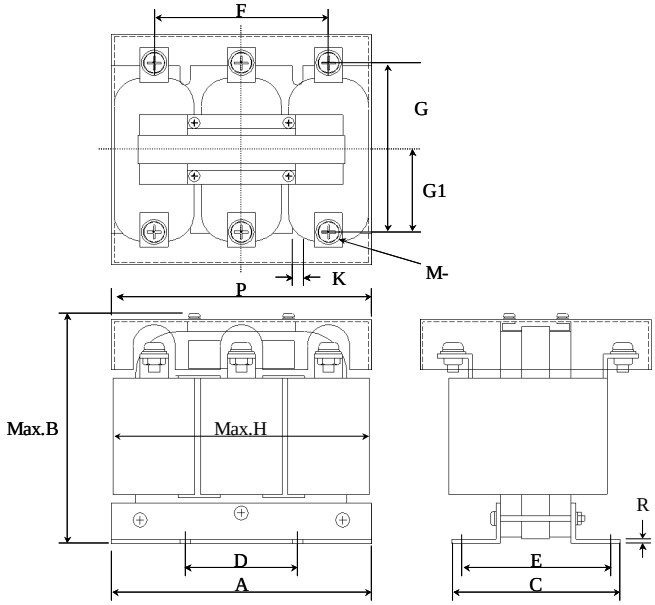

	A	B	C	D	E	F	G	G1	H	K	P	R	M
Shape (1)	185	170	120	80	100	124	125	58	190	7.2	185	2.6	M8
Shape (2)	184	170	120	80	100	124	115	57.5	185	7.2	185	2.6	M8

(g) A81L-0001-0163

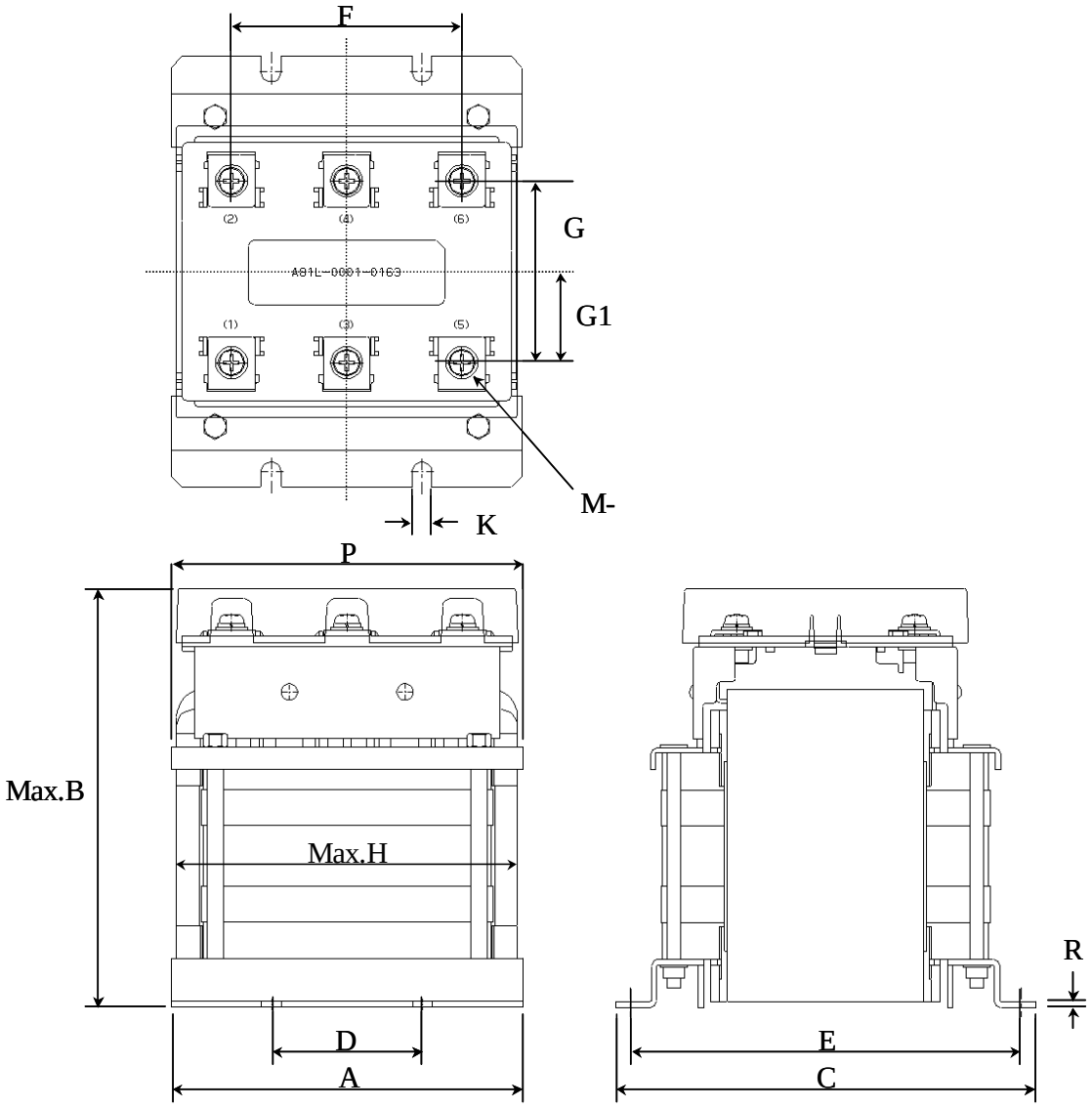

	A	B	C	D	E	F	G	G1	H	K	P	R	M
A81L-0001-0163	135	155	165	55	145	84	66	33	135	7.2	135	2	M5

(h) A81L-0001-0164

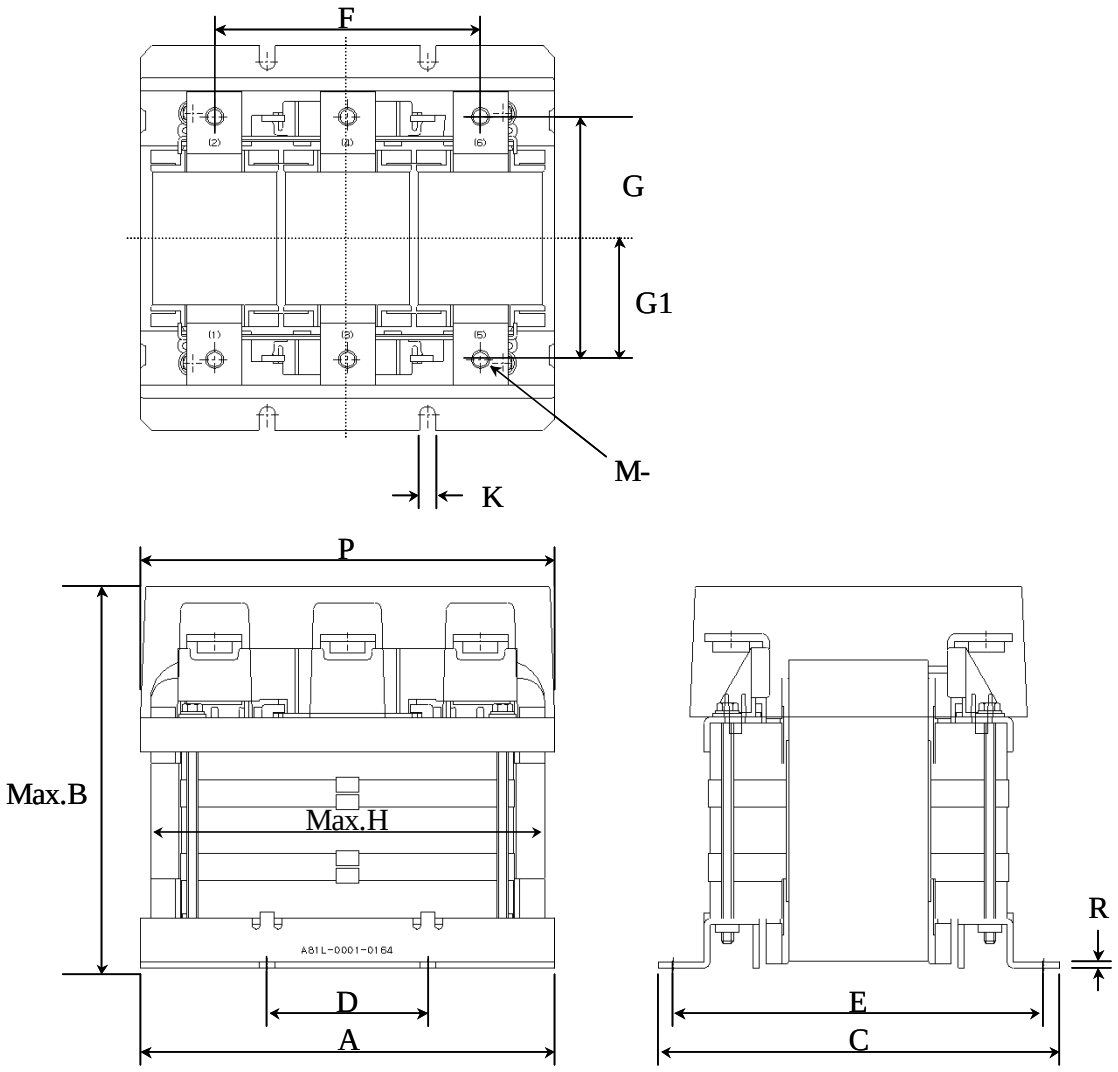

	A	B	C	D	E	F	G	G1	H	K	P	R	M
A81L-0001-0164	185	172	175	70	154	116	106	53	185	7	185	2.6	M8

(i) A81L-0001-0165

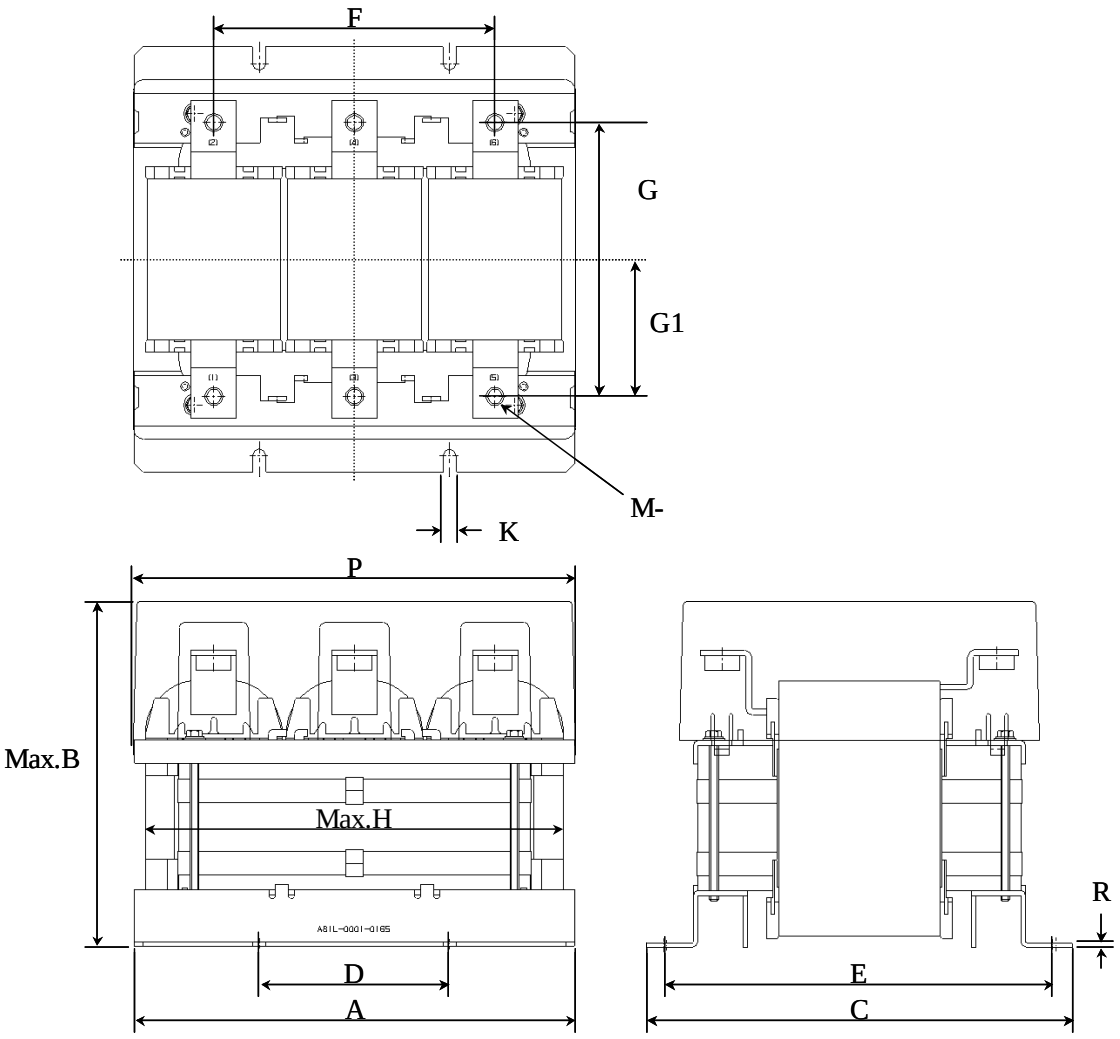

	A	B	C	D	E	F	G	G1	H	K	P	R	M
A81L-0001-0165	248	200	238	105	216	155	151	75.5	248	7	248	2.6	M10

(j) A81L-0001-0167
(j) A81L-0001-0170

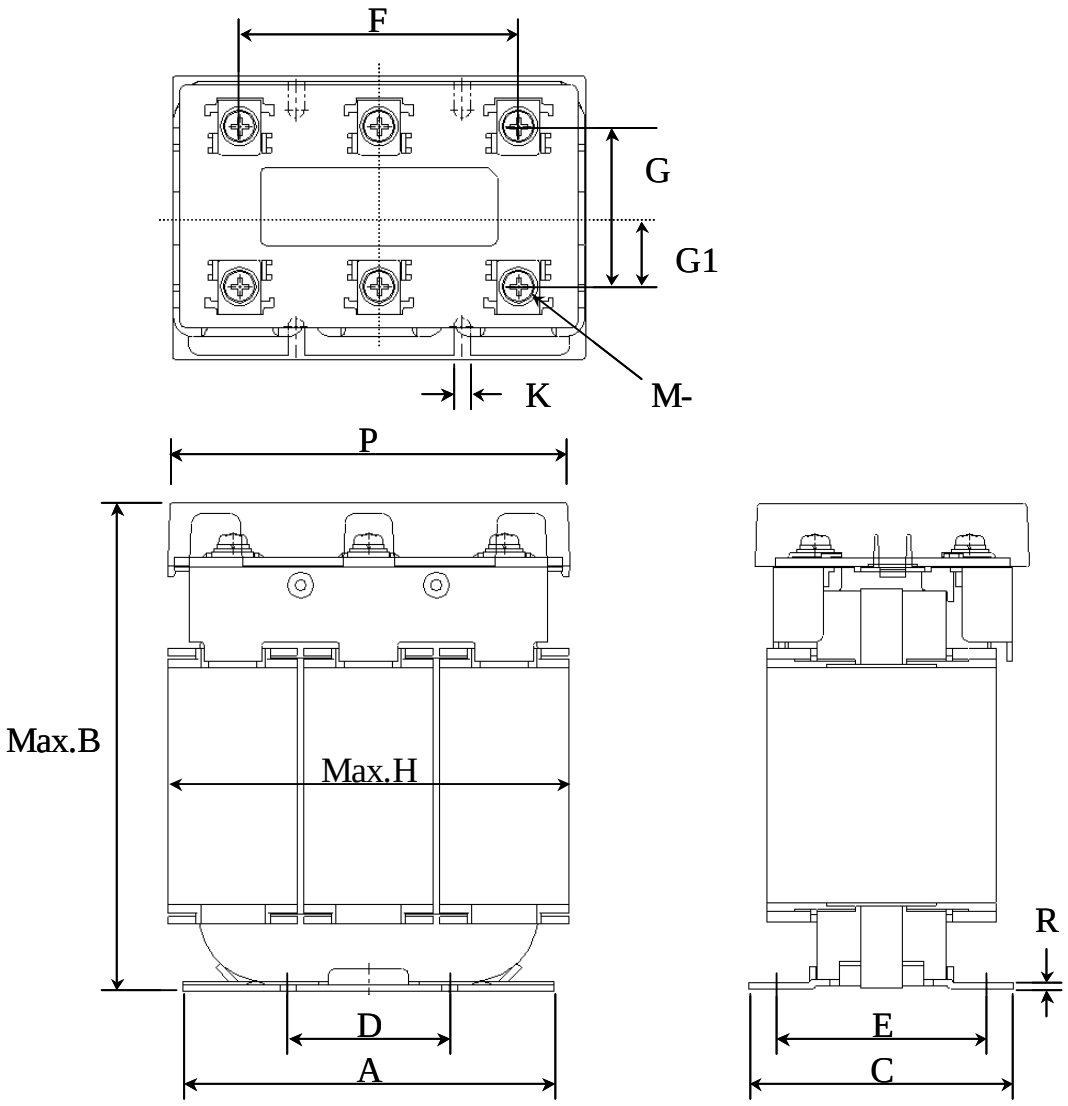

	A	B	C	D	E	F	G	G1	H	K	P	R	M
Shape (1)	115	155	82	50	65	84	48	20.5	135	5	135	2	M5

8.1.3 AC Line Filter

(a) A81L-0001-0083#3C, A81L-0001-0171

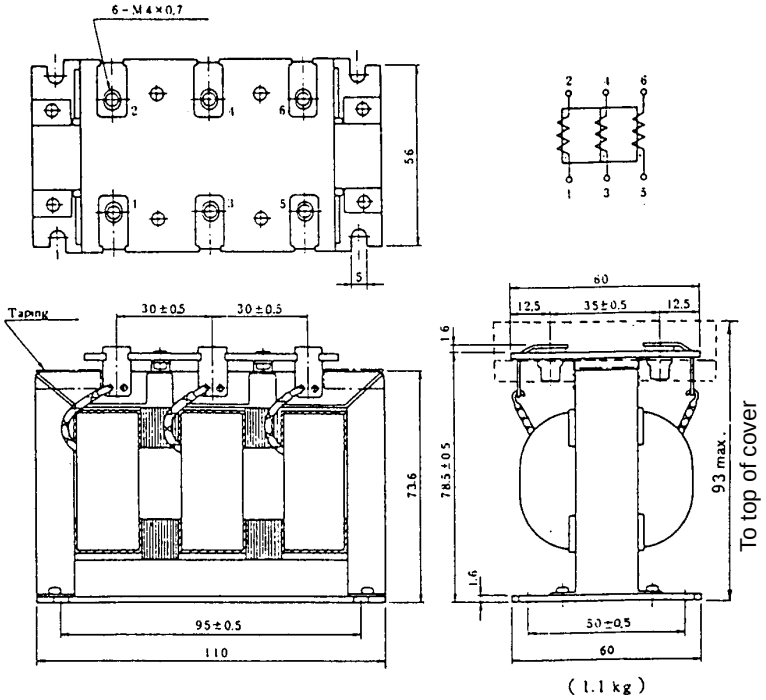

(b) A81L-0001-0101#C

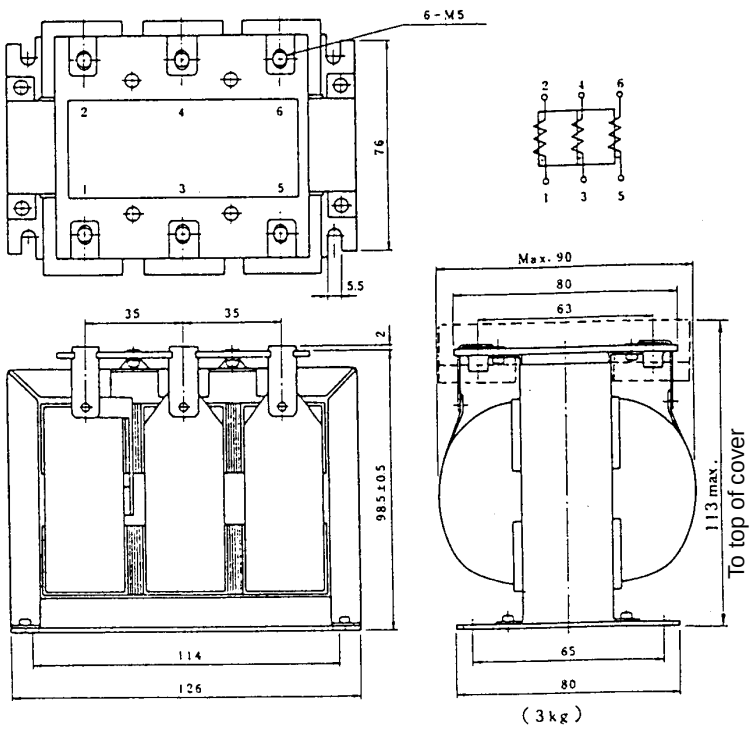

8.1.4 Power Transformer

(a) For αi PS 5.5, αi PS_R 5.5 (at 5.5 kW output) (A06B-6052-J001)

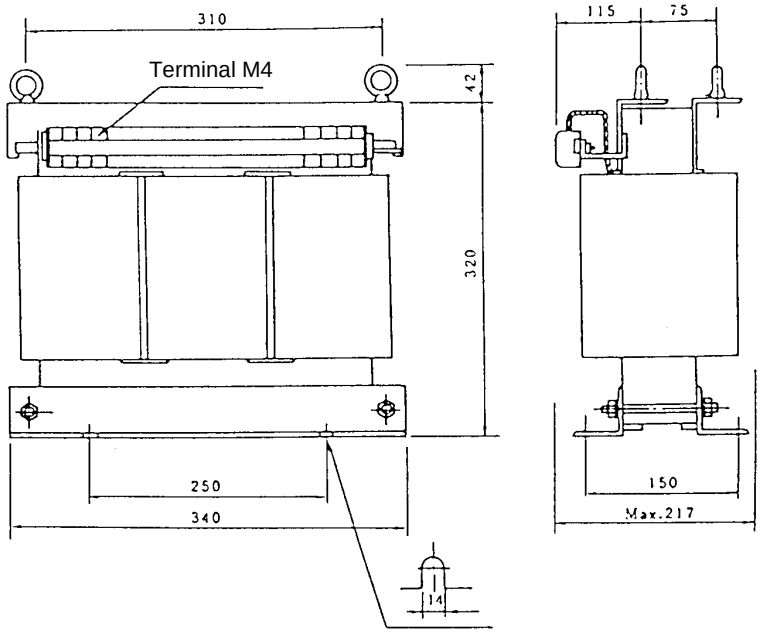

Outline Drawing of Power Transformer with no Cover

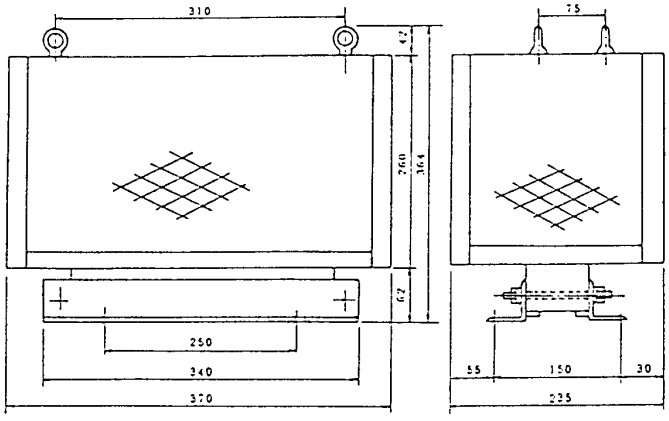

Outline Drawing of Power Transformer with Cover

NOTE
The four side panels are all meshed, while the top is a solid plate.

(b) For αi PS 11 , αi PS_R 5.5 (at 7.5KW output) (A06B-6044-J006)

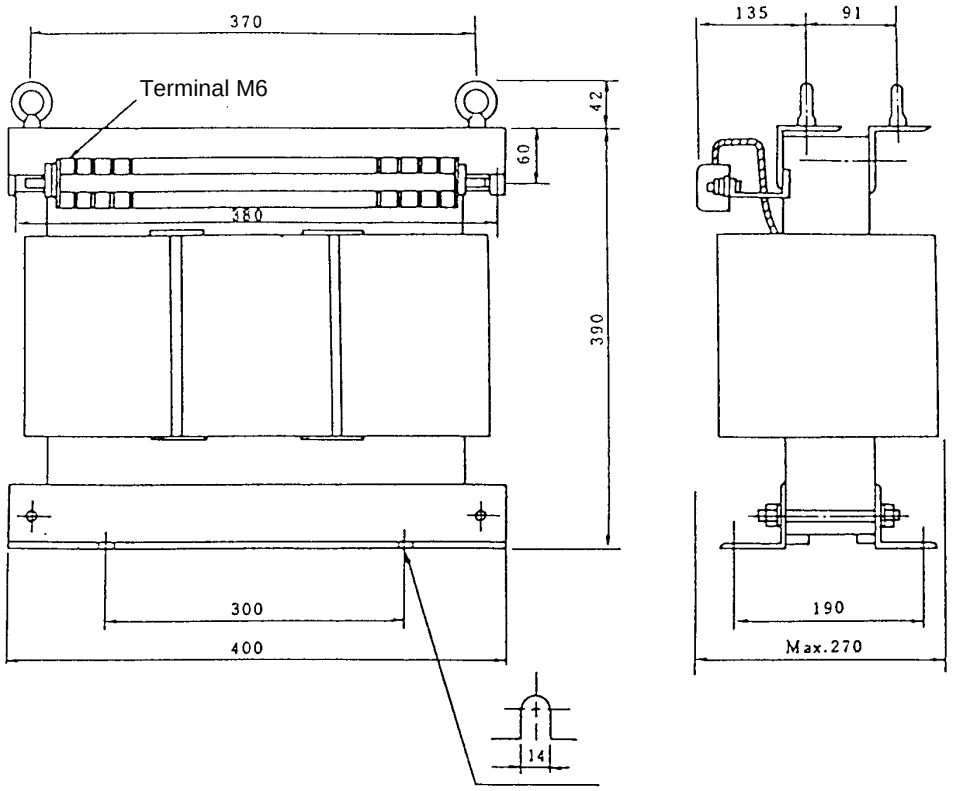

Outline Drawing of Power Transformer with no Cover

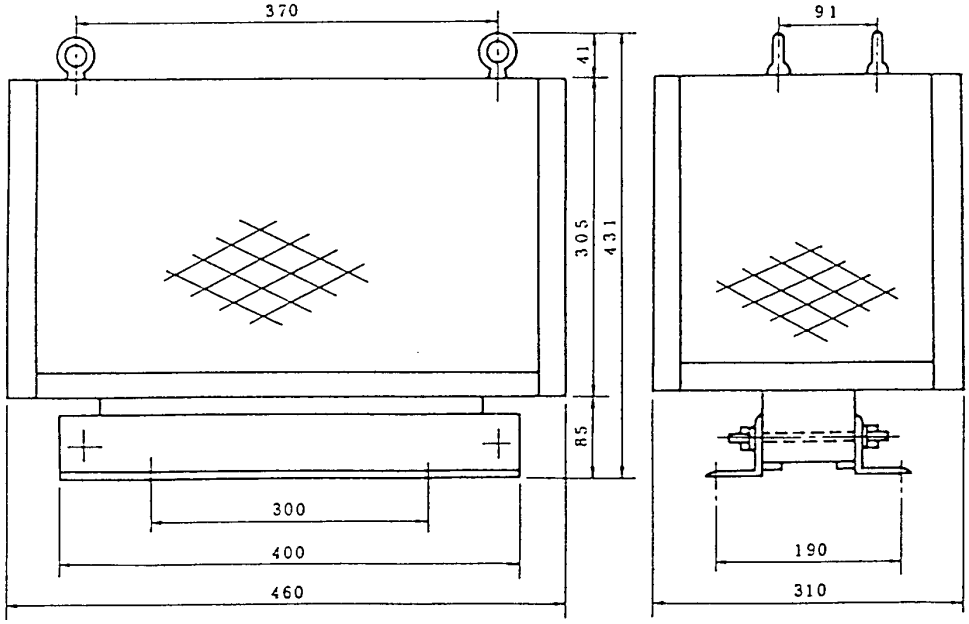

Outline Drawing of Power Transformer with Cover

NOTE
The four side panels are all meshed, while the top is a solid plate.

(c) For αi PS 15 (A06B-6044-J007)

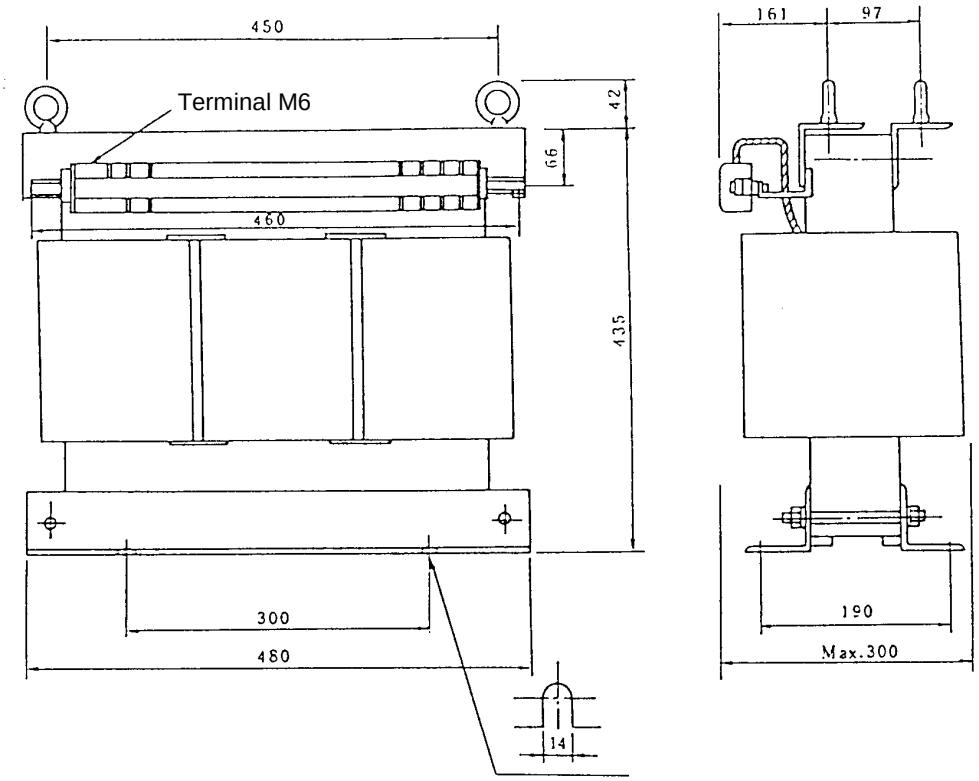

Outline Drawing of Power Transformer with no Cover

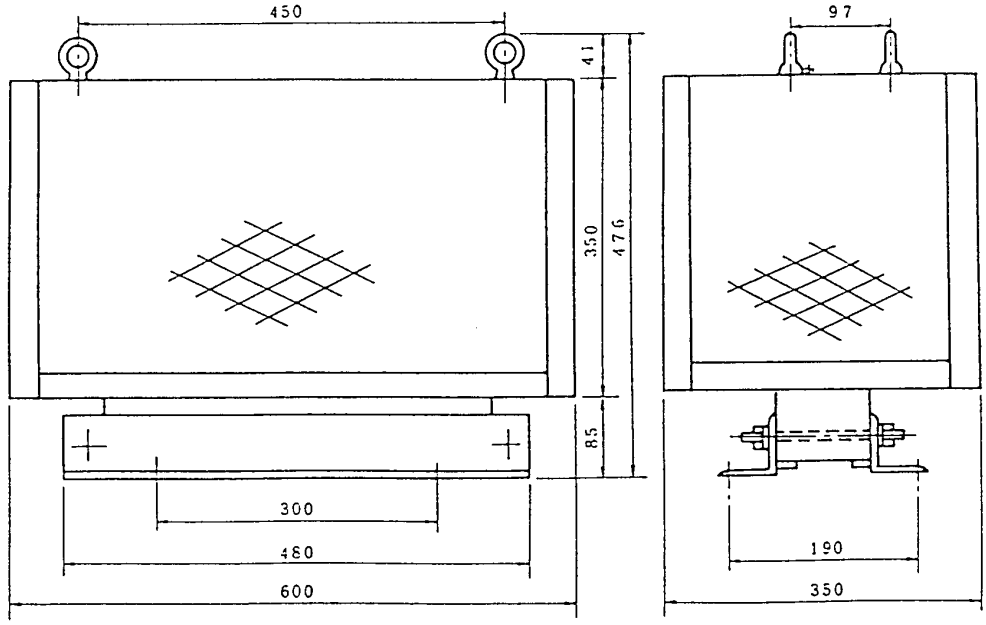

Outline Drawing of Power Transformer with Cover

NOTE
The four side panels are all meshed, while the top is a solid plate.

(d) For αi PS 26, 30(A06B-6044-J010)

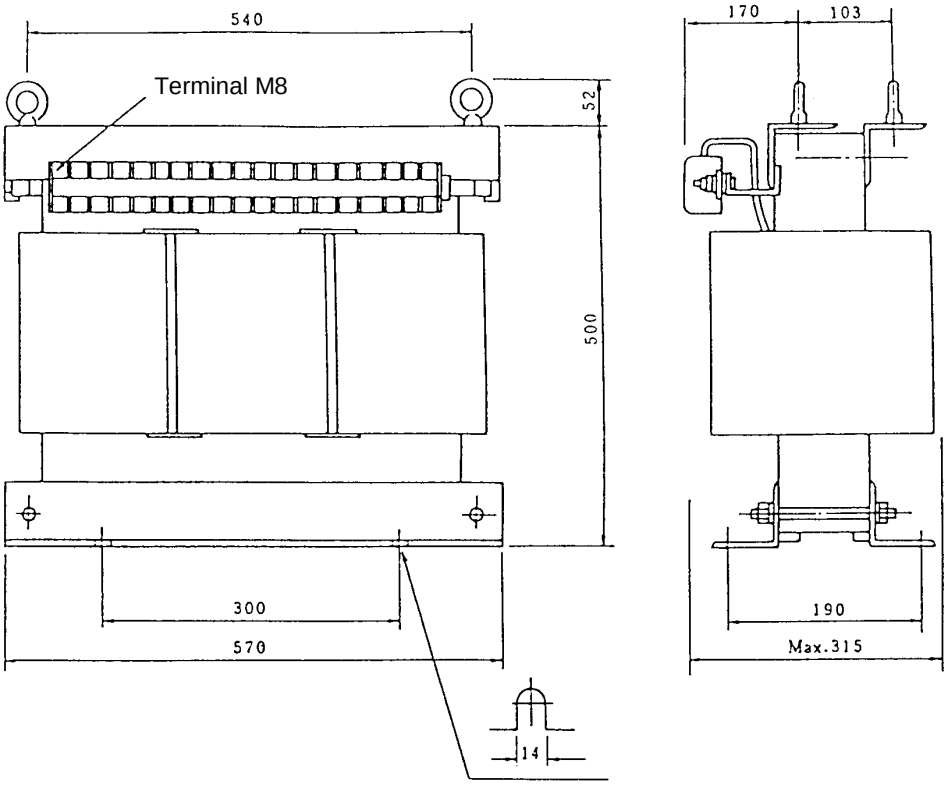

Outline Drawing of Power Transformer with no Cover

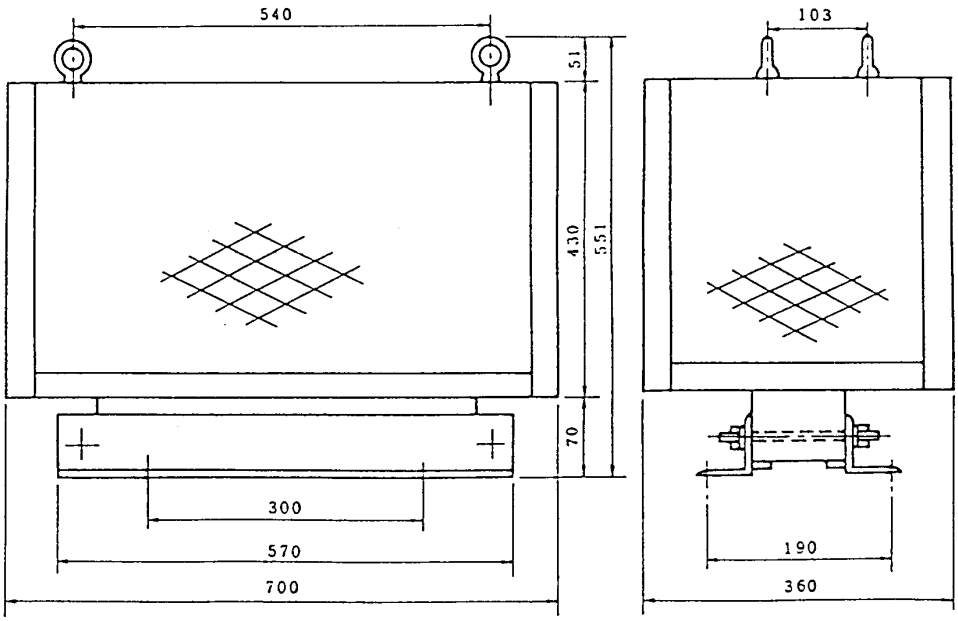

Outline Drawing of Power Transformer with Cover

NOTE
The four side panels are all meshed, while the top is a solid plate.

(e) For αi PS 37, αi PS 55 (at 45kW output) (A06B-6044-J015)

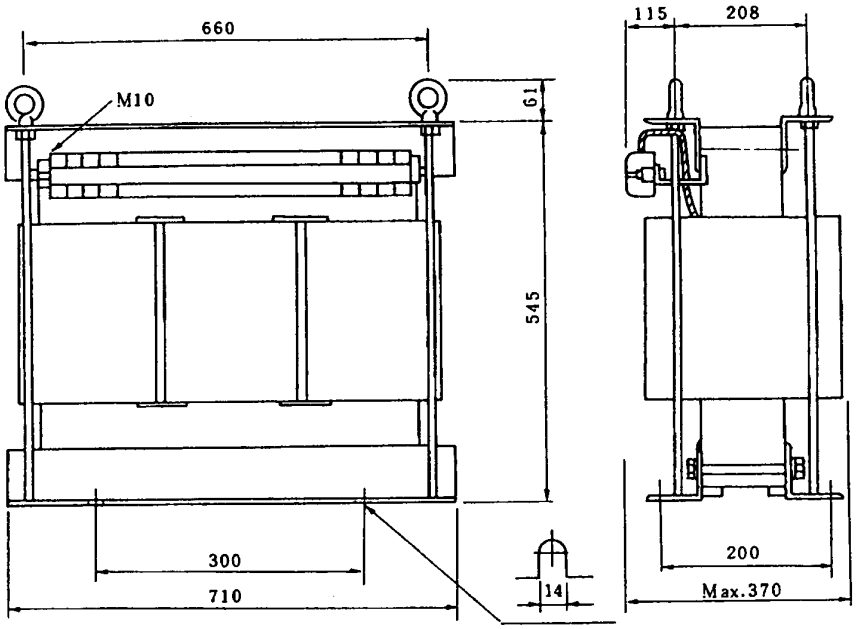

Outline Drawing of Power Transformer with no Cover

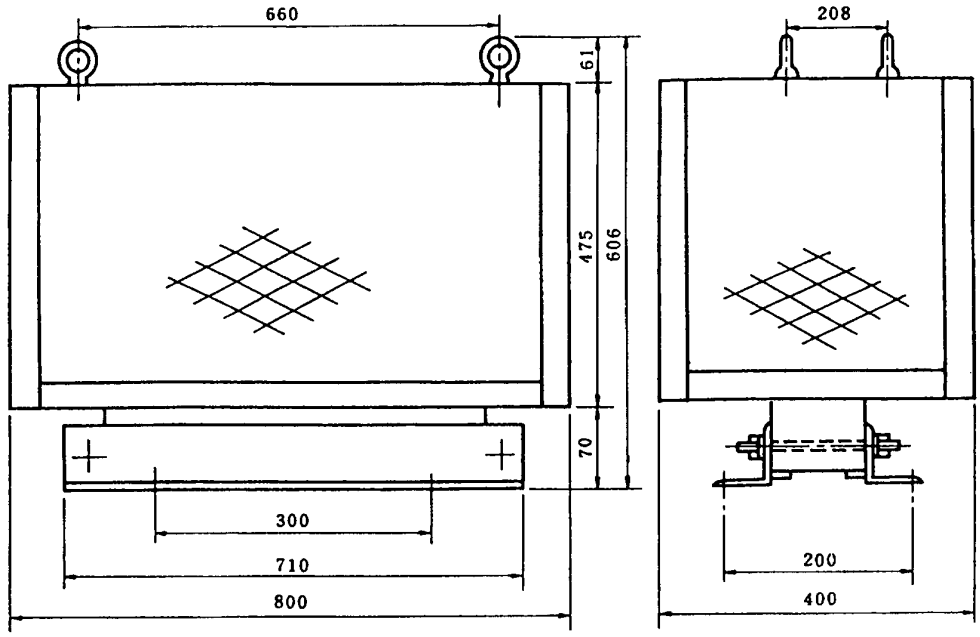

Outline Drawing of Power Transformer with Cover

NOTE
The four side panels are all meshed, while the top is a solid plate.

(f) For αi PS_R 3 (2KW output) (A80L-0024-0006), αi PS_R 3 (3KW output) (A80L-0026-0003)

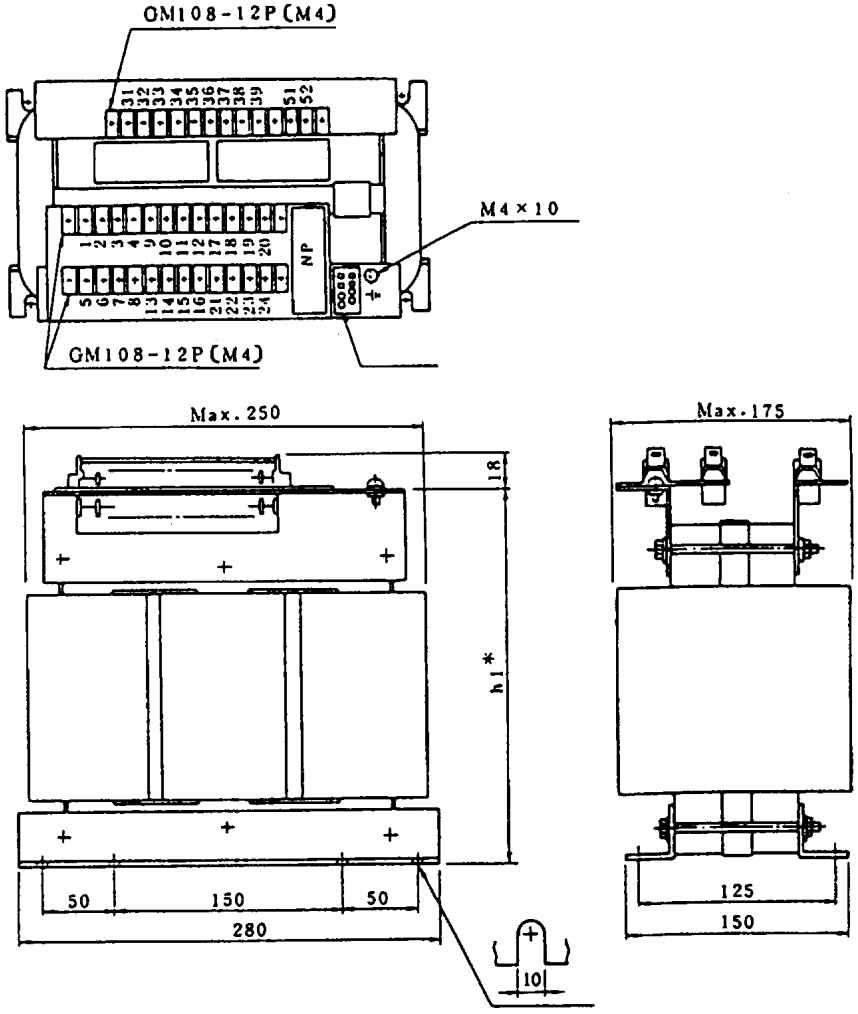

Drawing number	A80L-0024-0006	A80L-0026-0003
Type (name)	SBE	SCE
Weight	27 kg	36 kg
hl* (height of transformer)	217mm max	247mm max

8.1.5 Regenerative Discharge Unit

(a) A06B-6089-H510

For the panel cut-out drawing, see Section 8.2 (e).

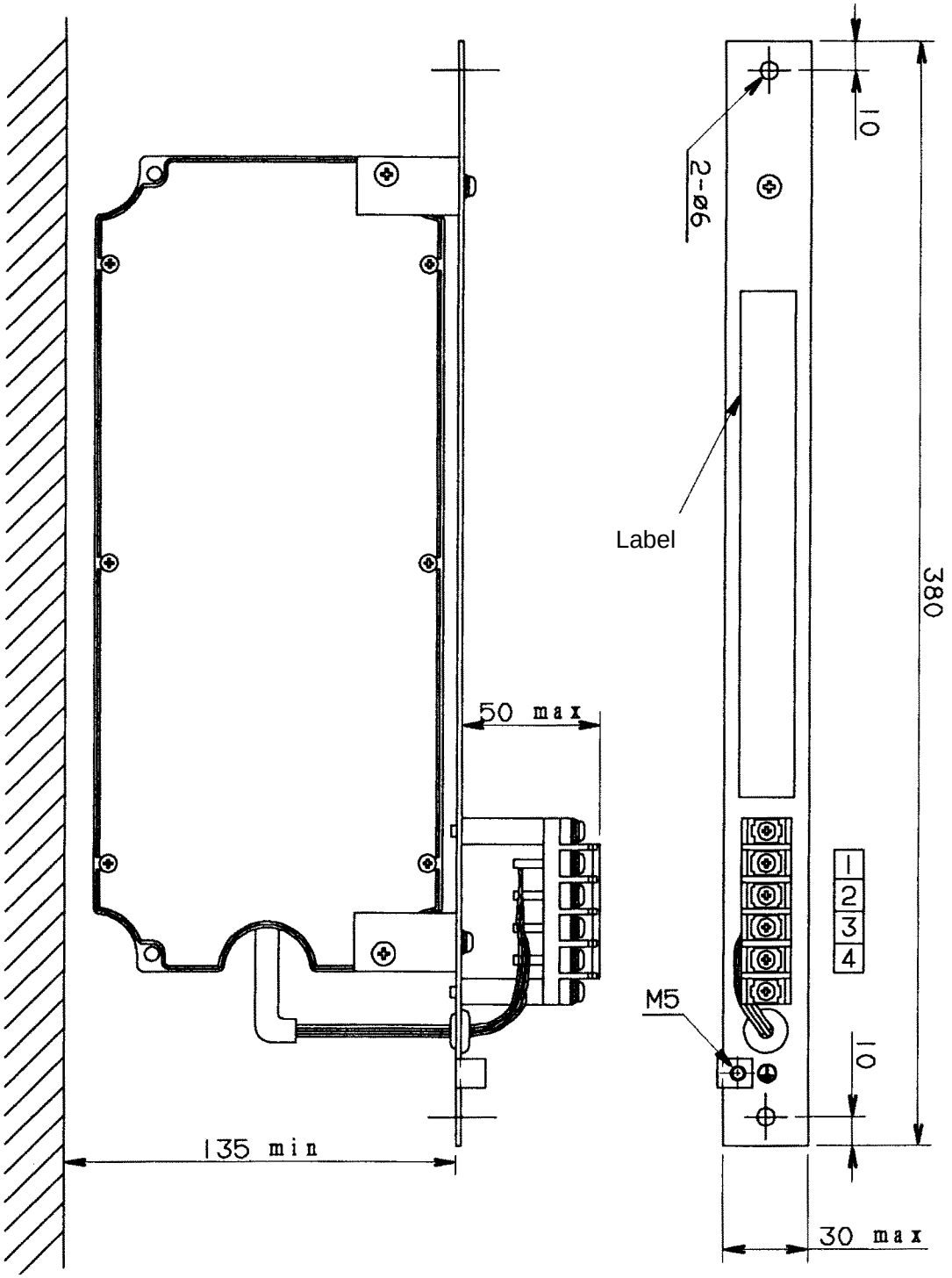

Terminal block: M4 × 4

(b) A06B-6089-H500

For the panel cut-out drawing, see Section 8.2 (f).

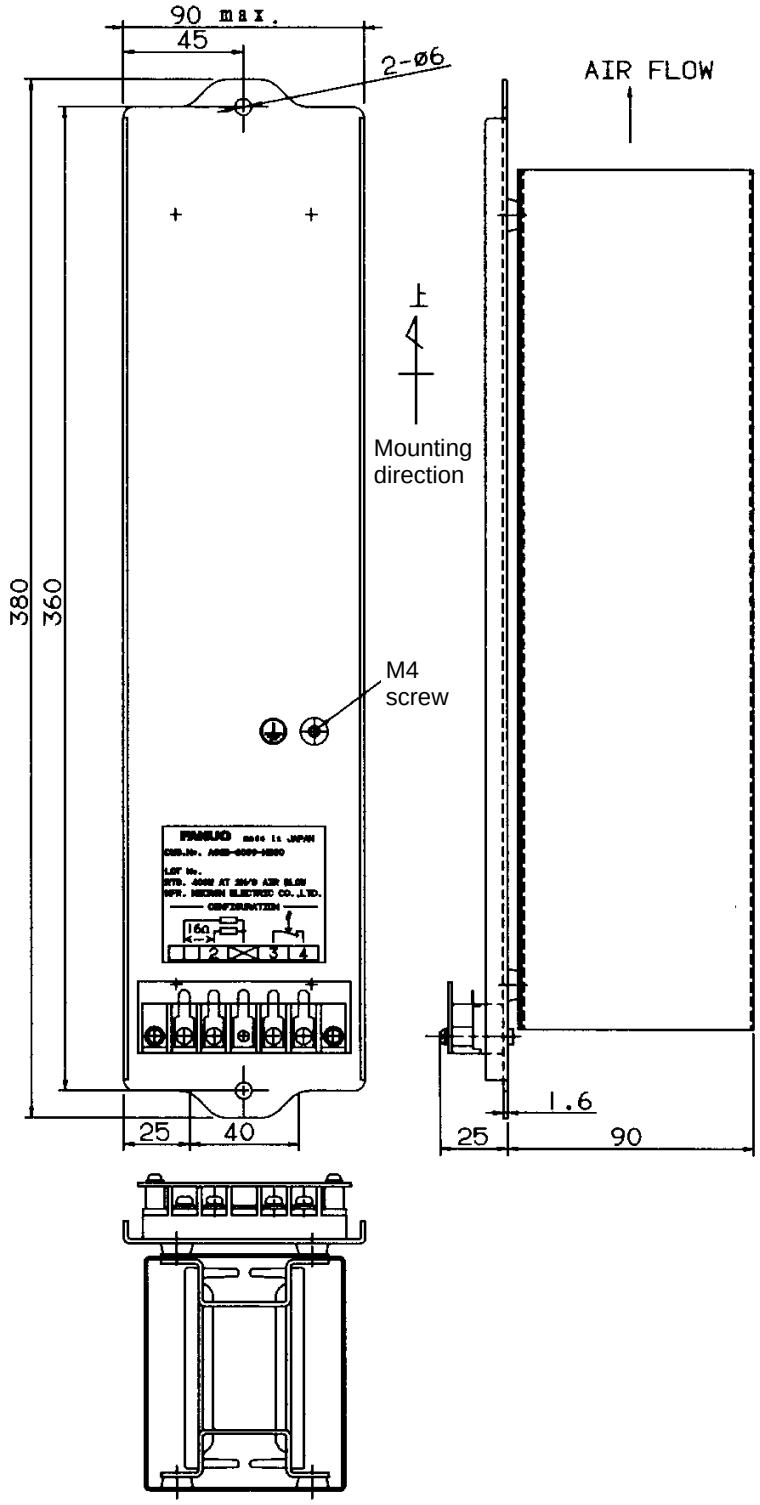

Terminal block: M4 × 4

(c) A06B-6089-H711 to H713

For the panel cut-out drawing, see Section 8.2 (g).

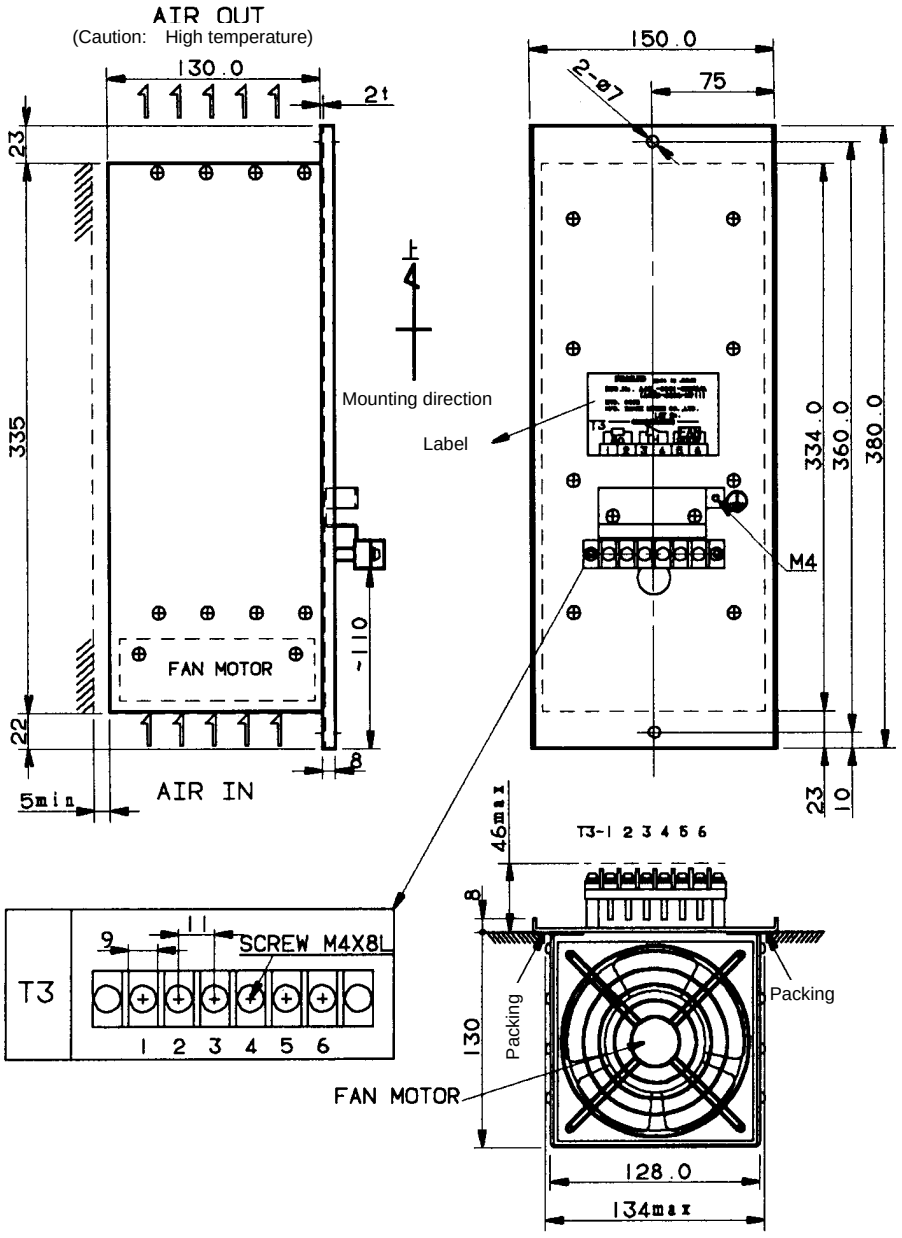

8.1.6 Dynamic Brake Module (DBM)

For the panel cut-out drawing, see Section 8.2 (j).

(a) A06B-6079-H401

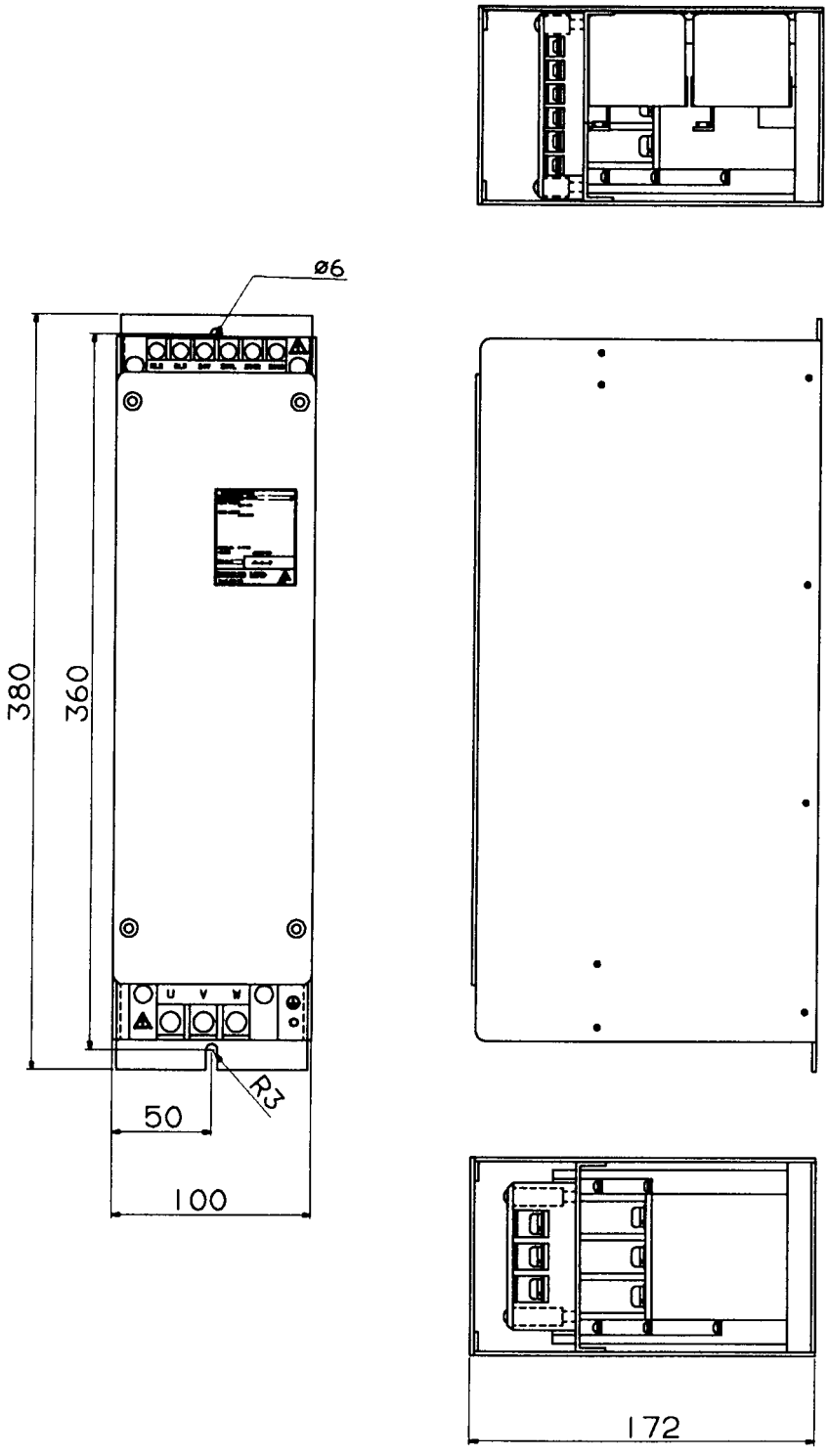

(b) A06B-6069-H300

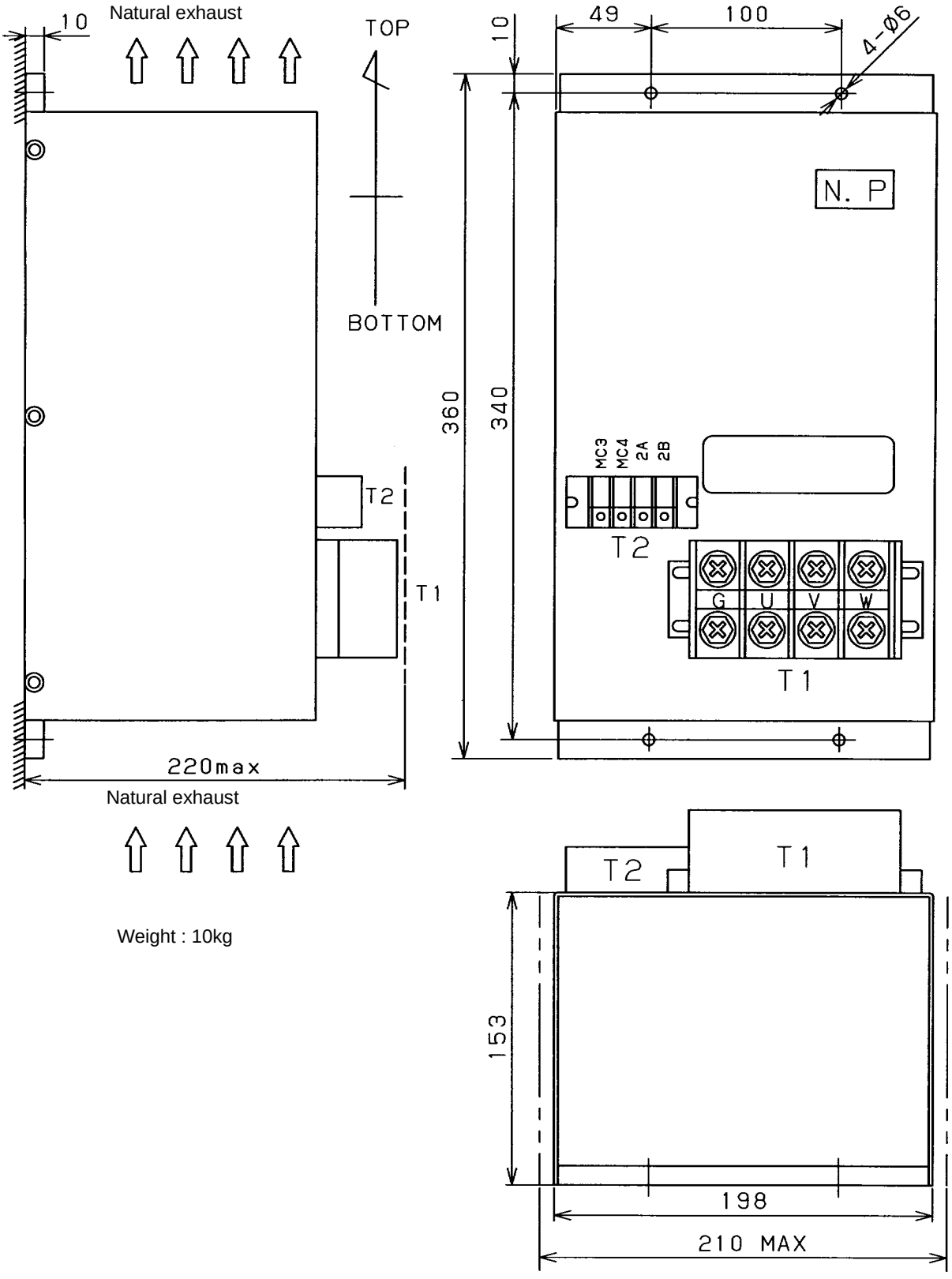

Weight : 10kg

8.1.7 Circuit Breaker

	Ordering drawing number	A	B	C	D	E	M_1-	F	G	H	I	J	K	L	M_2-	N	Mounting
(a)	A06B-6077-K101	75	50	180	84	100	M5	17	84	60	43	ϕ7.8	ϕ4.9	84	M4	25	2 positions
(b)	A06B-6077-K102																
(c)	A06B-6077-K103	75	50	180	84	100	M8	17	84	60	43	ϕ7.8	ϕ4.9	84	M4	25	2 positions
(d)	A06B-6077-K104																
(e)	A06B-6077-K108																
(f)	A06B-6077-K105																
(g)	A06B-6077-K110	105	70	265	144	165	M8	25.5	84	56	47	ϕ8.5	ϕ4.5	126	M4	35	4 positions
(h)	A06B-6077-K109																
(i)	A06B-6077-K107																
(j)	A06B-6077-K106	75	50	180	84	100	M5	17	84	60	43	ϕ7.8	ϕ4.9	84	M4	25	2 positions

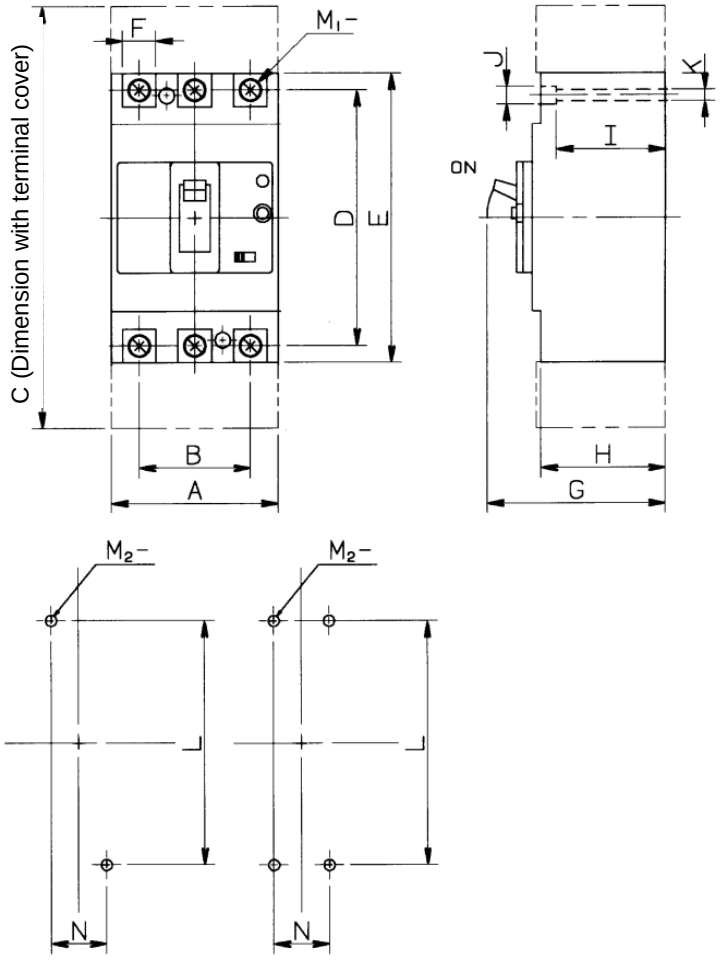

Two mounting holes(1) Two mounting holes(2) Four mounting holes

The circuit breakers have two or four mounting holes.

(k) A06B-6077-K111

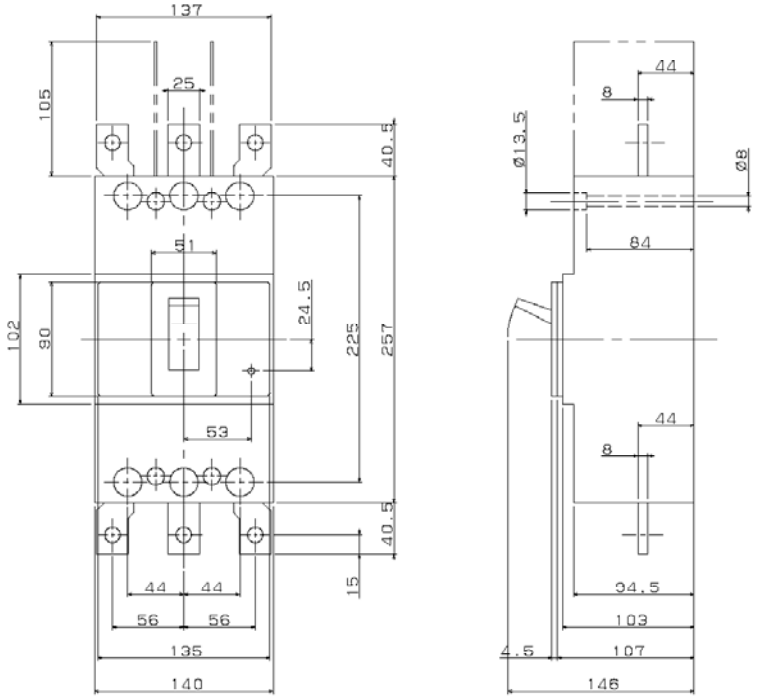

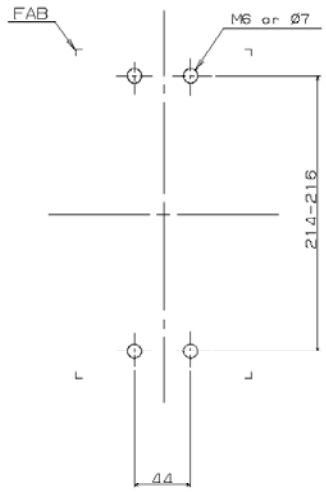

8.1.8 Magnetic Contactors

(a) A06B-6077-K121

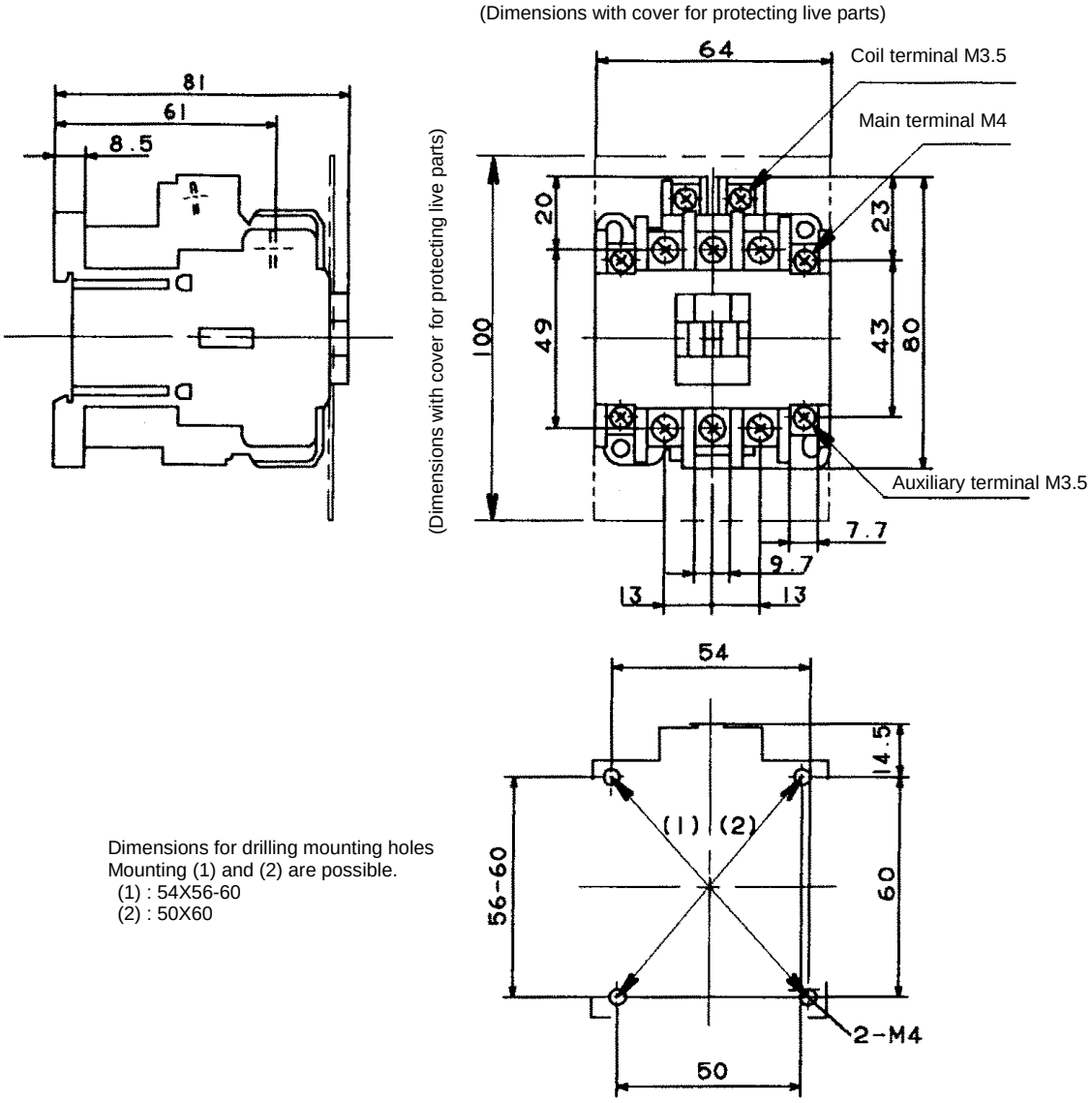

Dimensions for drilling mounting holes
Mounting (1) and (2) are possible.
(1) : 54X56-60
(2) : 50X60

Ordering drawing number	Fuji Electric part number		Operation coil voltage	Auxiliary contact structure	Weight
	Body	Cover			
A06B-6077-K121	SC-5-1	SZ-JC4	200V/50Hz 200-220V/60Hz	1a1b	0.38Kg

(b) A06B-6077-K122, A06B-6077-K123

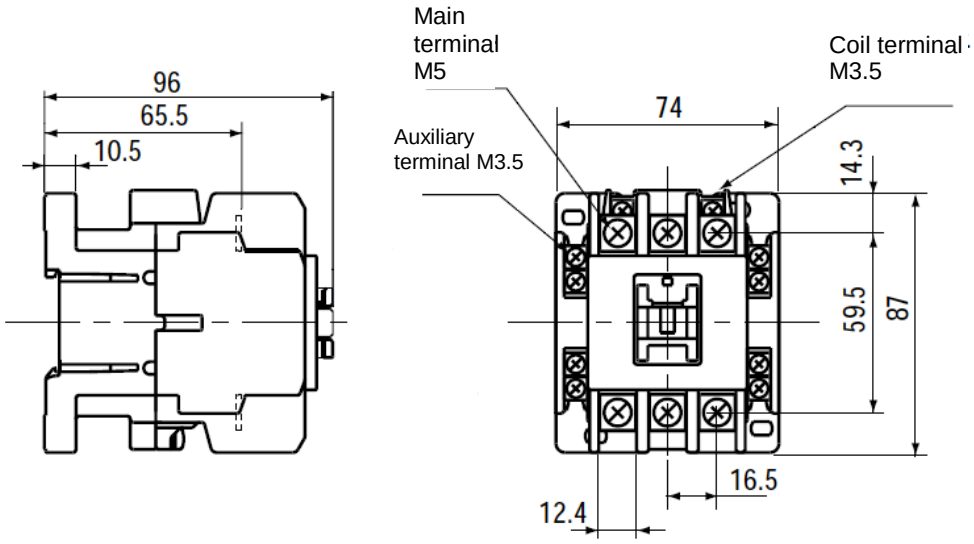

Dimensions for drilling mounting holes

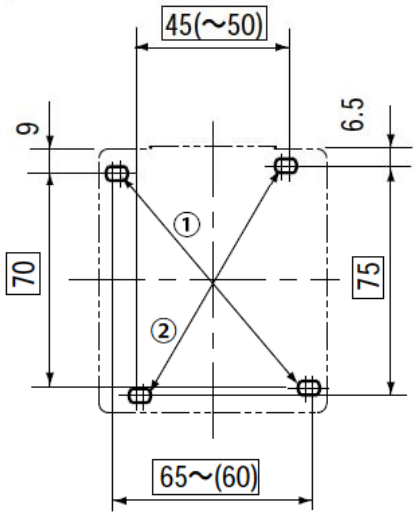

- Mounting dimensions: Holes <1> or <2> can be used for mounting.
  <1>: (60 to) 65 × 70 (compatible with SC-1N and SC-2N)
  <2>: 45 (to 50) × 75
- Mounting screw: 2-M4
  Install a screw at two mounting holes located diagonally.

Ordering drawing number	Fuji Electric part number		Operation coil voltage	Auxiliary contact structure	Weight
	Body	Body			
A06B-6077-K122	SC-N1	SZ-N1J	200V/50Hz	2a2b	0.59Kg
A06B-6077-K123	SC-N2	SZ-N1J	200-220V/60Hz		0.59Kg

(c) A06B-6077-K124

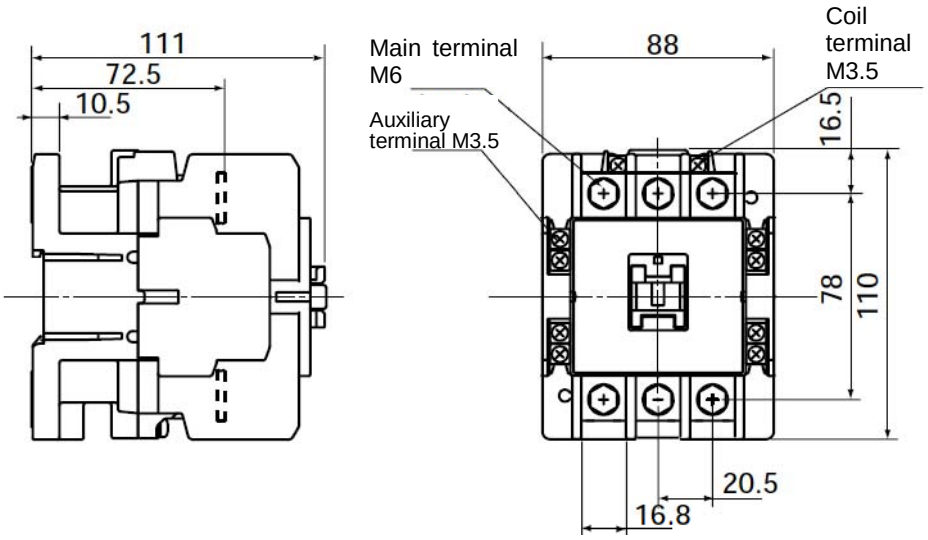

Dimensions for drilling mounting holes

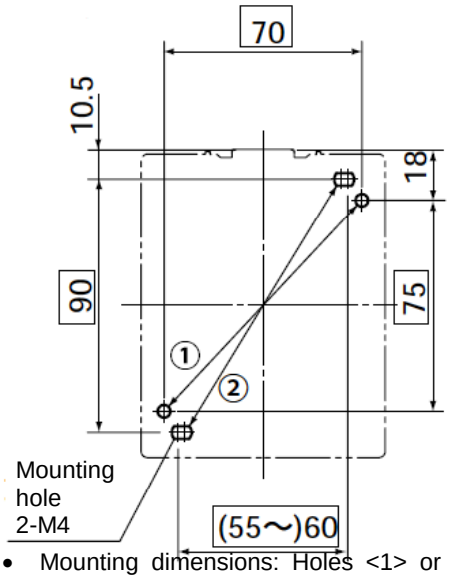

- Mounting dimensions: Holes <1> or <2> can be used for mounting.
  <1>: 70 × 75 (compatible with SC-1N and SC-2N)
  <2>: (55 to) 60 × 90
- Mounting screw: 2-M4
  Install a screw at two mounting holes located diagonally.

Ordering drawing number	Fuji Electric part number		Operation coil voltage	Auxiliary contact structure	Weight
	Body	Body			
A06B-6077-K124	SC-N2S	SZ-N2SJ	200V/50Hz 200-220V/60Hz	2a2b	1.1Kg

(d) A06B-6077-K125

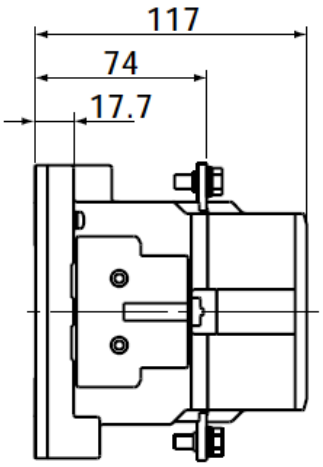

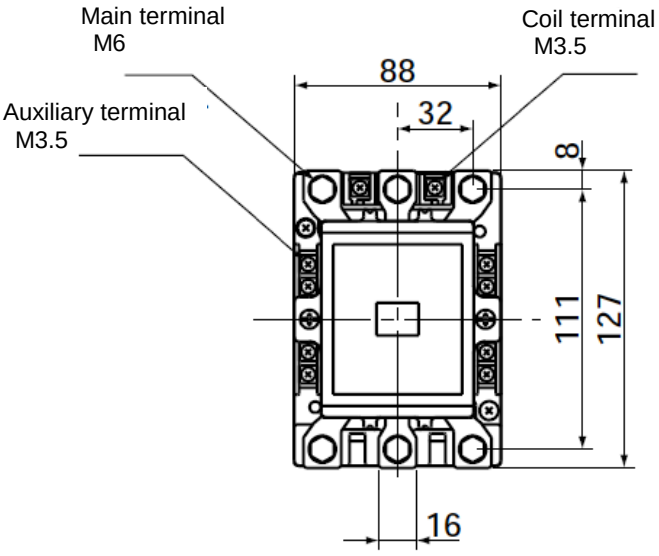

Dimensions for drilling mounting holes

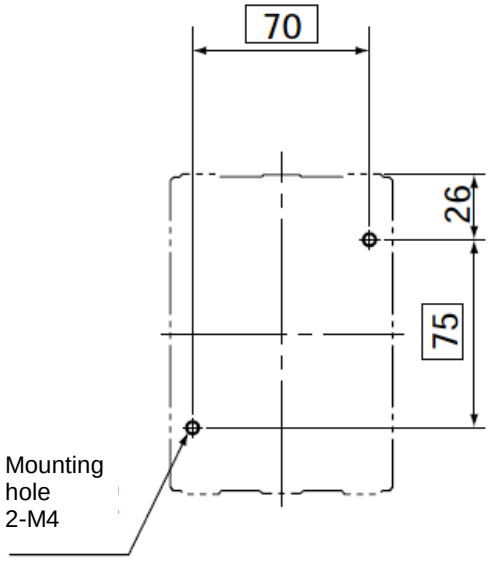

Ordering drawing number	Fuji Electric part number		Operation coil voltage	Auxiliary contact structure	Weight
	Body	Cover			
A06B-6077-K125	SC-N4	SZ-N4J	200V/50Hz 200-220V/60Hz	2a2b	1.5Kg

(e) A06B-6077-K126

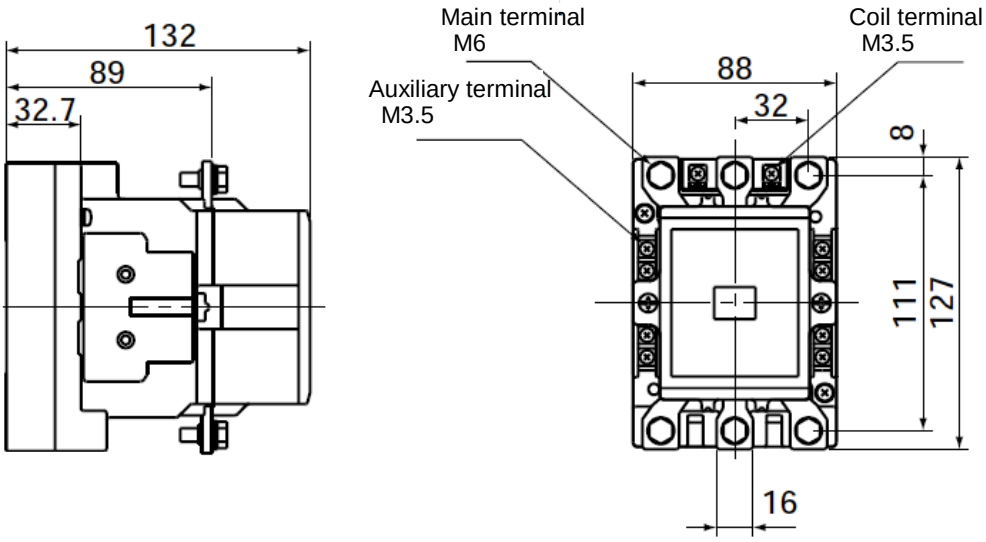

Dimensions for drilling mounting holes

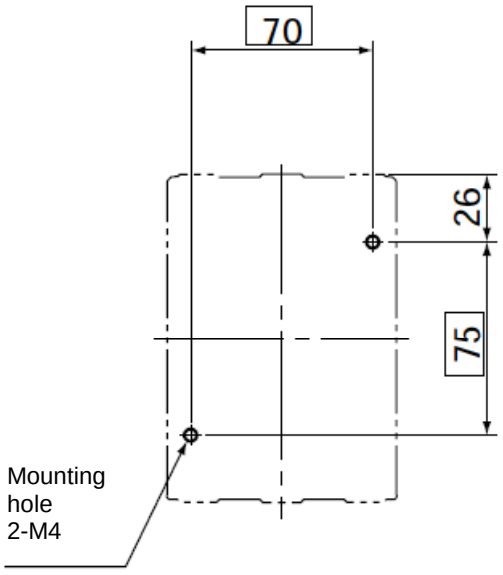

Ordering drawing number	Fuji Electric part number		Operation coil voltage	Auxiliary contact structure	Weight
	Body	Body			
A06B-6077-K126	SC-N5	SZ-N4J	200V/50Hz 200-220V/60Hz	2a2b	1.8Kg

(f) A06B-6077-K127

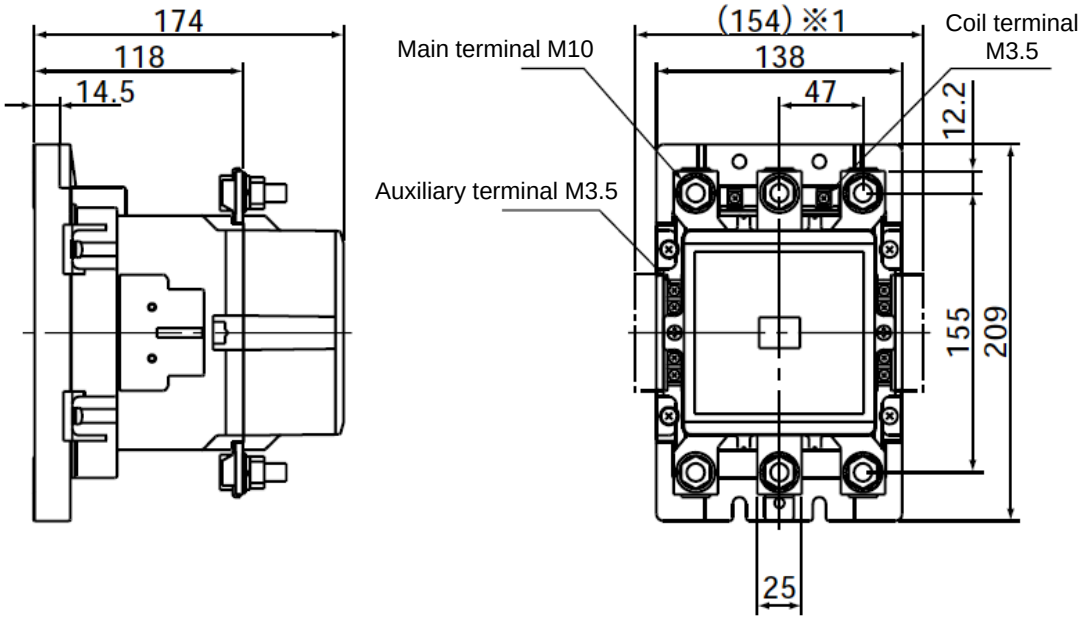

*1 When two side-on auxiliary contact units are installed

Mounting hole
2-M6

Dimensions for drilling mounting holes

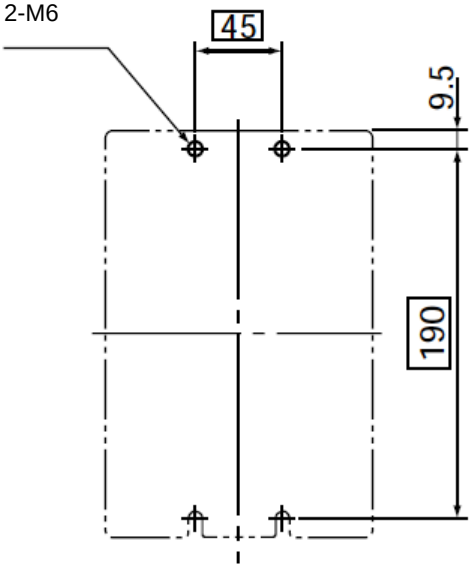

Ordering drawing number	Fuji Electric part number		Operation coil voltage	Auxiliary contact structure	Weight
	Body	Body			
A06B-6077-K127	SC-N8	SZ-N8J	200V/50Hz 200-220V/60Hz	2a2b	4.9Kg

(g) A06B-6077-K128

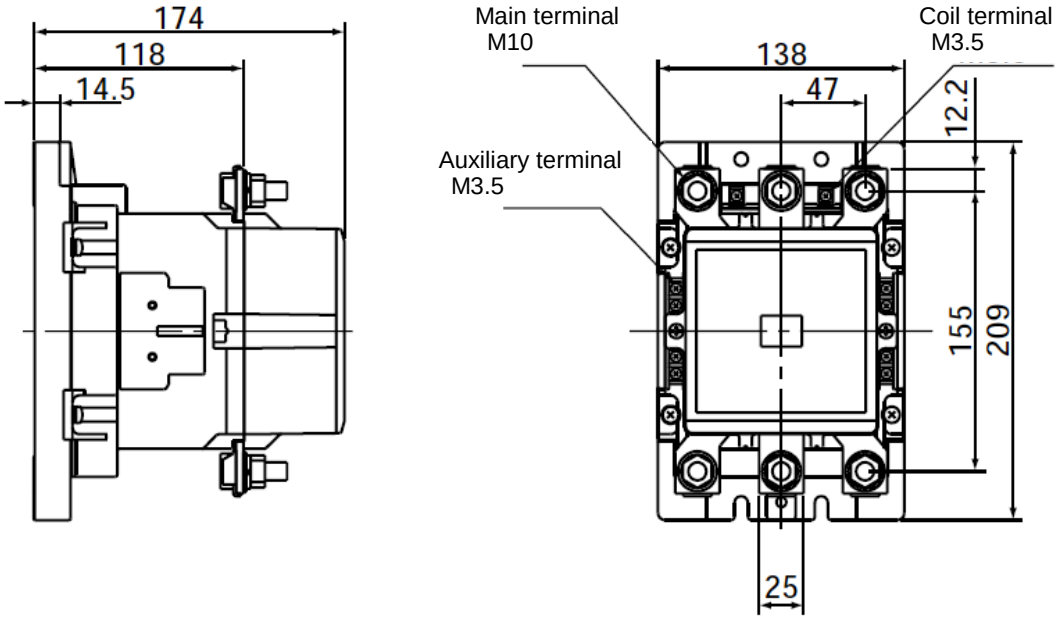

Dimensions for drilling mounting holes

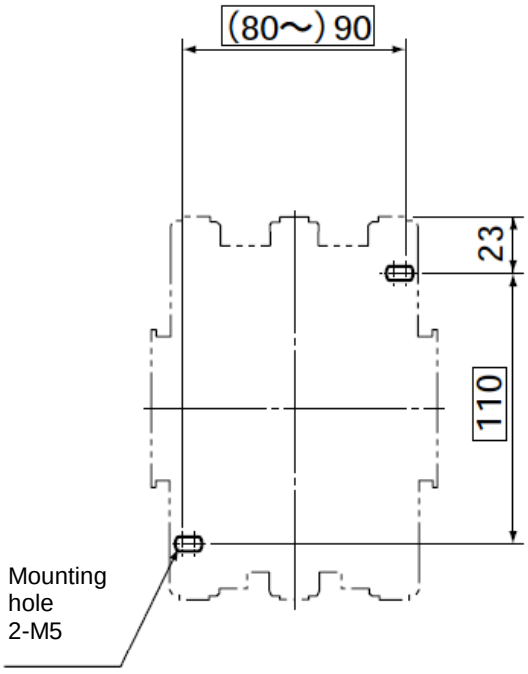

Ordering drawing number	Fuji Electric part number		Operation coil voltage	Auxiliary contact structure	Weight
	Body	Body			
A06B-6077-K128	SC-N7	SZ-N7J	200V/50Hz 200-220V/60Hz	2a2b	2.7Kg

8.1.9 Lightning Surge Protector

(a) A06B-6077-K142

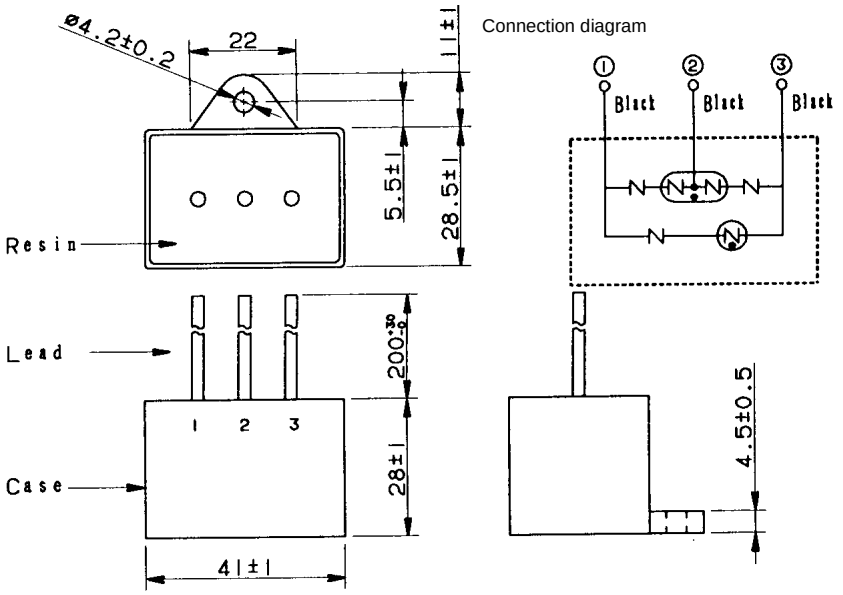

(1) For line-to-line installation: RAV-781BYZ-2

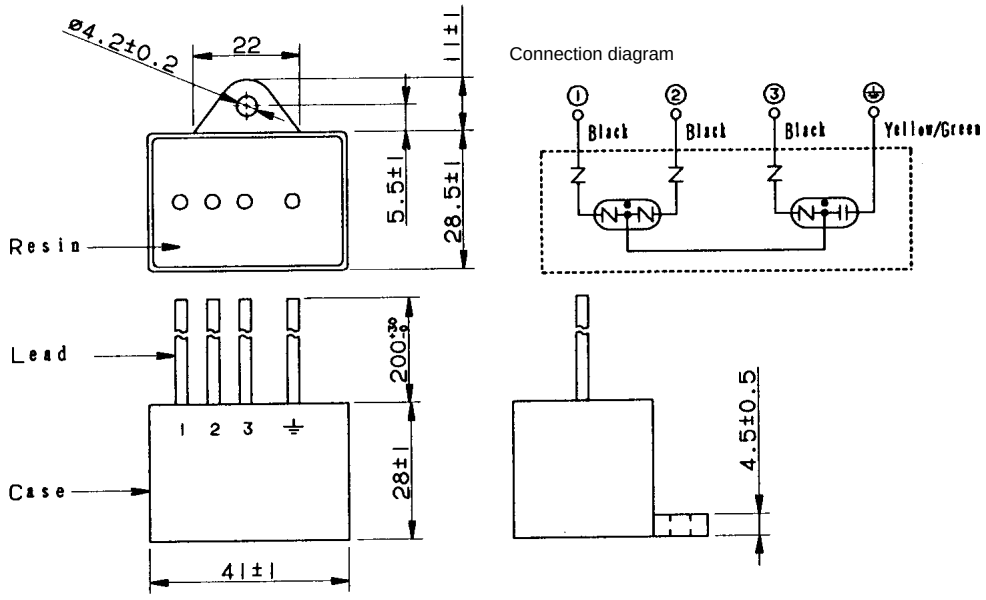

(2) For line-to-ground installation: RAV-781BXZ-4

Specification	Rated voltage	Clamp voltage	Surge withstand current	Surge withstand voltage
R·A·V-781BYZ-2	250VAC	783VDC±10%(V1.0)	2500A(8/20μS)	20kV(1.2/50μS)

Specification	Rated voltage	AC discharge start voltage	Surge withstand current	Maximum surge discharge start voltage
R·A·V-781BXZ-4	line-to-line: 430VAC, line-to-ground: 250VAC	700VAC±20%(Ua)	2500A(8/20μS)	2.0kV(1.2/50μS)

(b) A06B-6077-K143

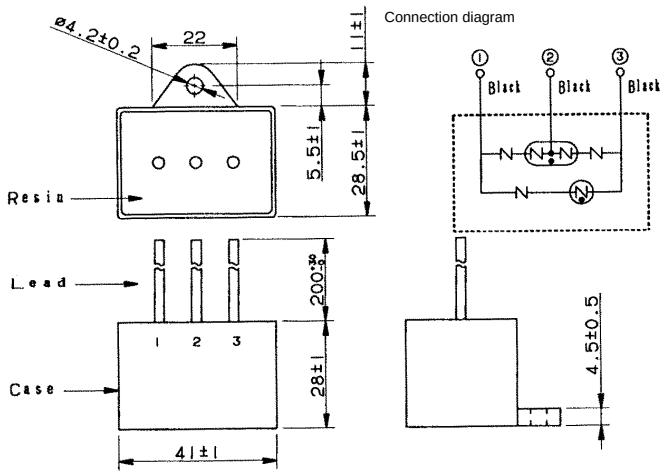

(1) For line-to-line installation: RAV-152BYZ-2A

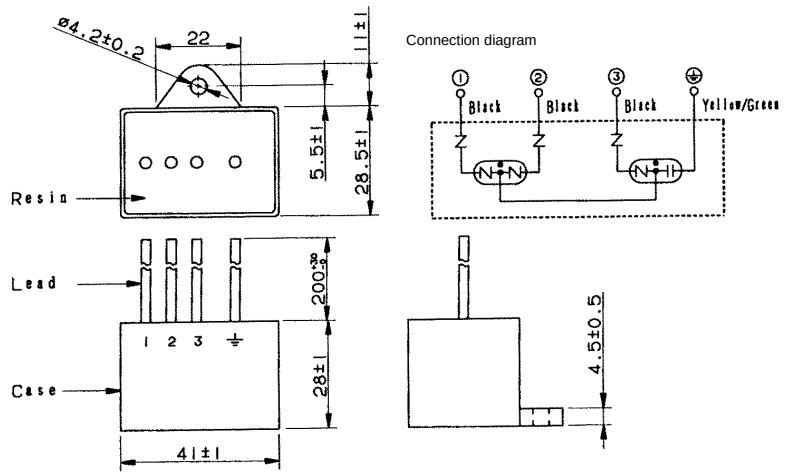

(2) For line-to-ground installation: RAV-801BXZ-4

Specification	Rated voltage	Clamp voltage	Surge withstand current	Surge withstand voltage
R·A·V-152BYZ-2A	460VAC+15%	1470V±10%(V1.0)	2500A(8/20μS)	20kV(1.2/50μS)

Specification	Rated voltage	AC discharge start voltage	Surge withstand current	Maximum surge discharge start voltage
R·A·V-801BXZ-4	line-to-line: 500VAC, line-to-ground: 290VAC	AC800V±20%(Ua)	2500A(8/20μS)	2.32kV(1.2/50μS)

(c) A06B-6077-K144

Connection diagram

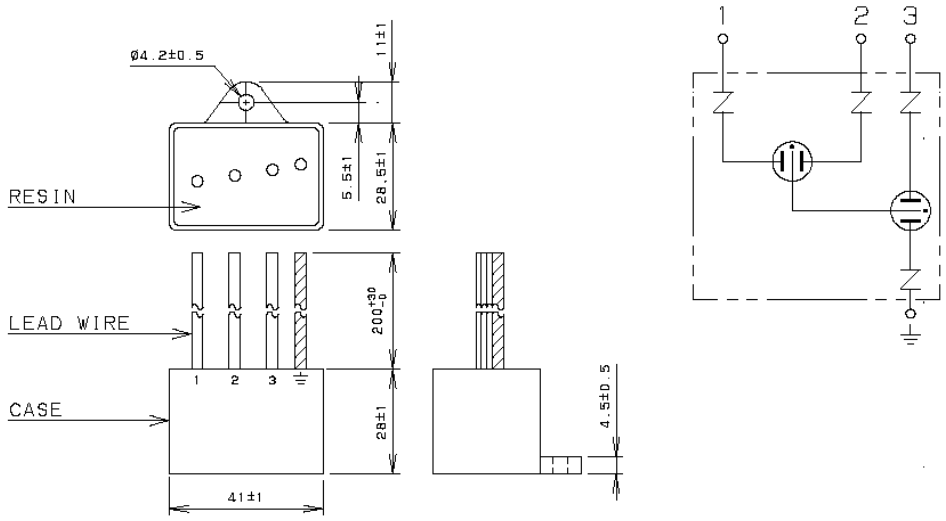

Specification	Rated voltage	AC discharge start voltage	Clamp voltage	Surge withstand current	Surge withstand voltage	Maximum surge discharge start voltage
R·C·M-601BUZ-4	250VAC	560VAC ±20%(Ua)	2000V ±10%(V1.0)	2500A (8/20μS)	20kV (1.2/50μS)	2kV (1.2/50μS)

8.1.10 Noise Filter

(a) A06B-6077-K155 to -K158

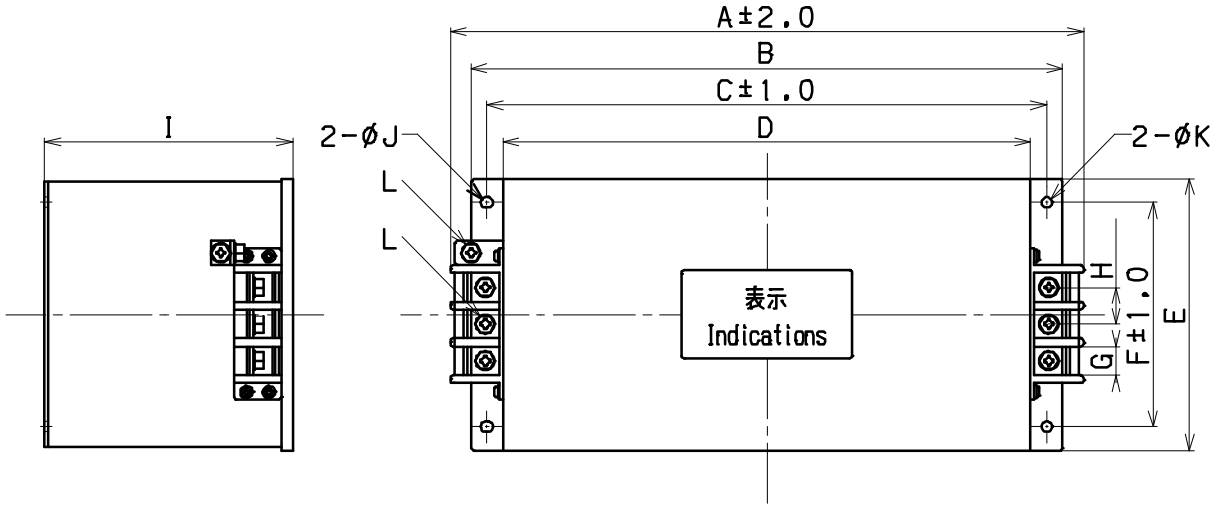

Unit : mm

General tolerance : ±1.5mm

Type	Dimensions (mm)											
	A	B	C	D	E	F	G	H	I	J	K	L
A06B-6077-K155 (3SUP-HL30-ER-6)	246	230	215	200	100	85	13	18	140	4.5×7	4.5	M4
A06B-6077-K156 (3SUP-HL75-ER-6)	396	370	350	330	170	140	18	23	155	6.5×8	6.5	M6
A06B-6077-K157 (3SUP-HL150-ER-6)	484	440	420	400	200	170	30	25	200	6.5×8	6.5	M8
A06B-6077-K158 (3SUP-HL200-ER-6)	484	440	420	400	200	170	30	25	200	6.5×8	6.5	M8

3SUP-HLx-ER-6: External dimensions of noise filter

(b) A06B-6110-K160 to -K162

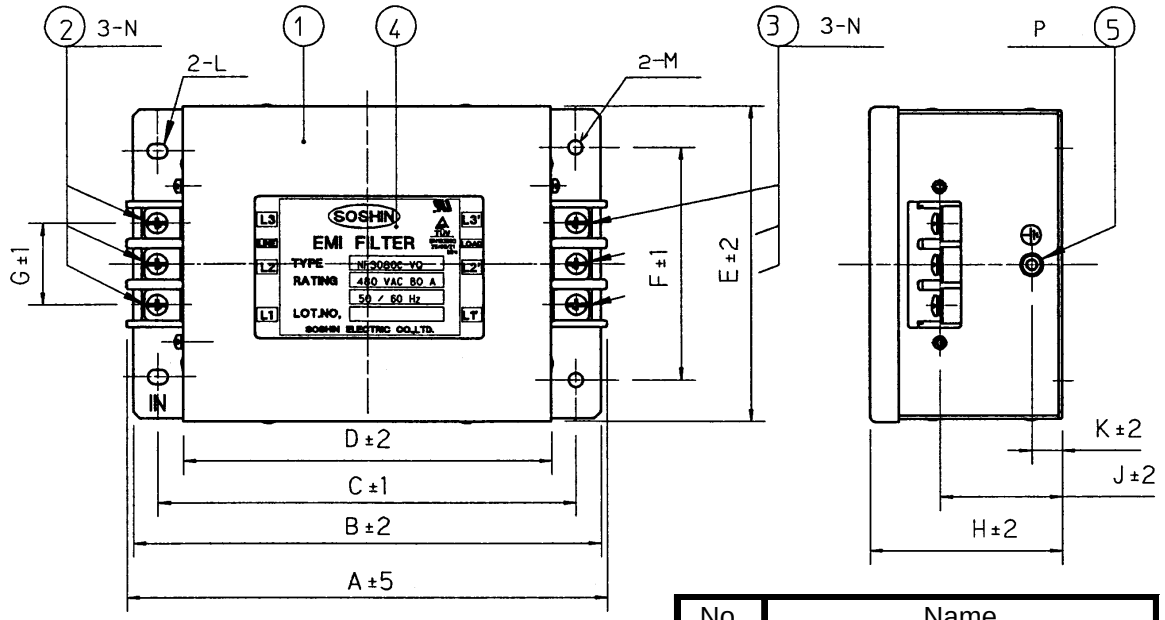

No.	Name
1	Case
2	Input terminal
3	Output terminal
4	Name plate
5	Earth terminal

Type	Dimensions (mm)													
	A	B	C	D	E	F	G	H	J	K	L	M	N	P
A06B-6110-K160 (NF3050C-VQ)	217	200	185	170	120	90	44	115	85	20	5.5×7	ϕ5.5	M6	M4
A06B-6110-K161 (NF3080C-VQ)	217	200	185	170	120	90	44	115	85	20	5.5×7	ϕ5.5	M6	M4
A06B-6110-K162 (NF3150C-VQ)	314	300	280	260	200	170	57	130	90	35	6.5×8	ϕ6.5	M8	M6

NF3050C/3080C/3150C-VQ: External dimensions of noise filter

(c) A06B-6110-K163,K164

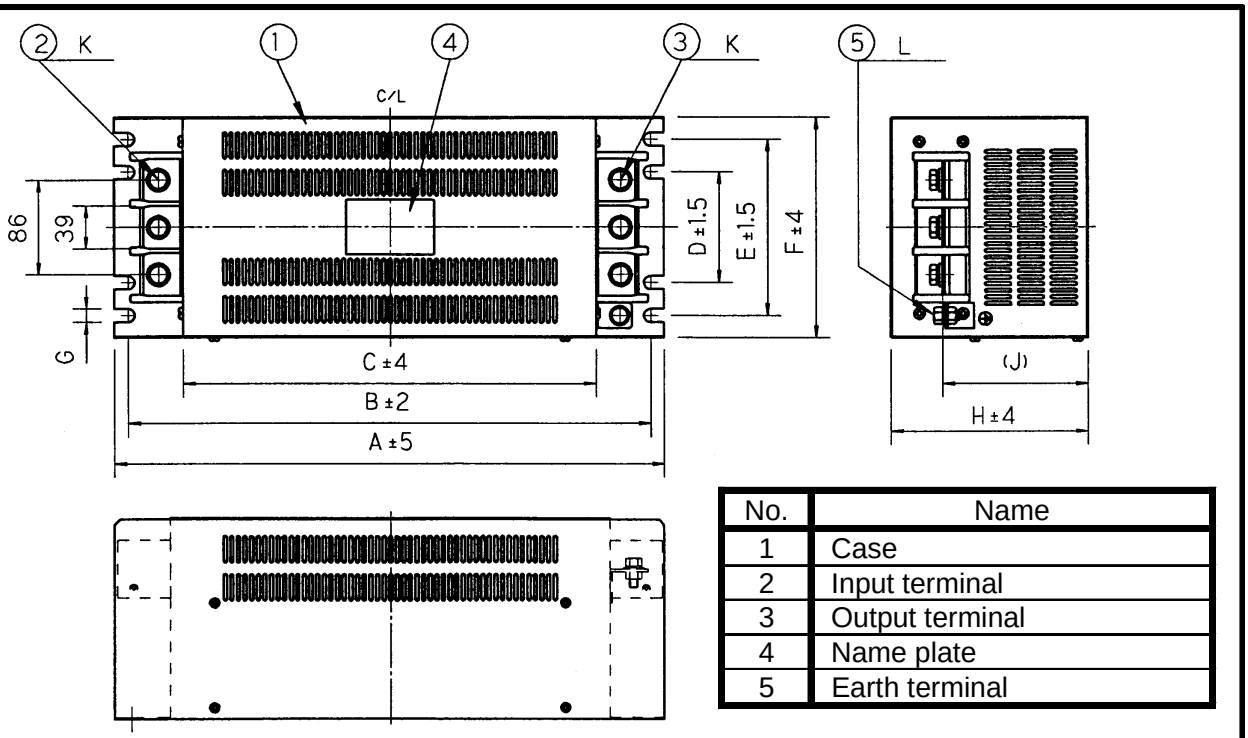

No.	Name
1	Case
2	Input terminal
3	Output terminal
4	Name plate
5	Earth terminal

Type	Dimensions (mm)										
	A	B	C	D	E	F	G	H	J	K	L
A06B-6110-K163 (NF3200C-VQ)	450	430	338	100	190	230	7	180	133	M10	M8
A06B-6110-K164 (NF3250C-VQ)	450	430	338	100	190	230	7	180	133	M10	M8

NF3200C/3250C-VQ: External dimensions of noise filter

8.2 PANEL CUT-OUT DIAGRAMS

(a) 60-mm-wide amplifier

With no external fin

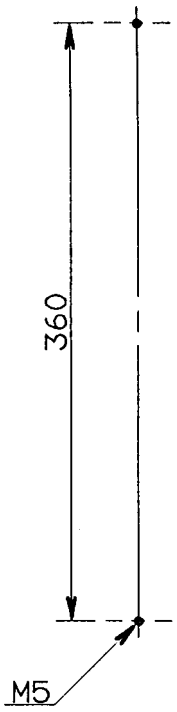

With external fin (when two units are installed side by side)

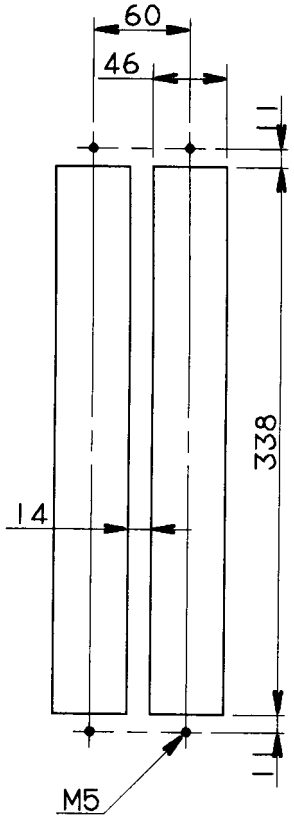

NOTE

1 When an external fin is provided, attach a packing (acrylonitrile-butadiene rubber, NBR [soft type]) to the fin to protect it against oil and dust.
2 Reinforce the right and left sides of the panel cut-out in the power magnetics cabinet by using fittings such as angles to maintain satisfactory contact between the sheet metal of the power magnetics cabinet and the flange of the amplifier.

(b) 90-mm-wide amplifier

With no external fin

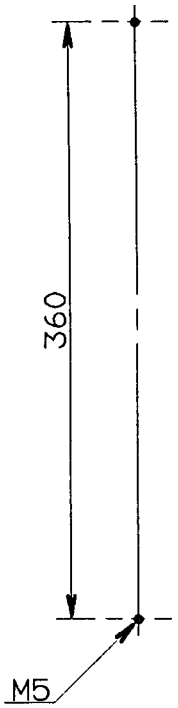

With external fin (when two units are installed side by side)

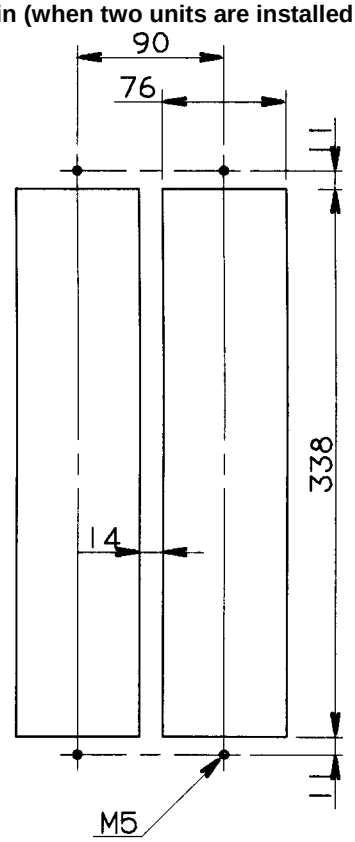

NOTE

1 When an external fin is provided, attach a packing (acrylonitrile-butadiene rubber, NBR [soft type]) to the fin to protect it against oil and dust.
2 Reinforce the right and left sides of the panel cut-out in the power magnetics cabinet by using fittings such as angles to maintain satisfactory contact between the sheet metal of the power magnetics cabinet and the flange of the amplifier.

(c) 150-mm-wide amplifier (when two units are installed side-by-side)

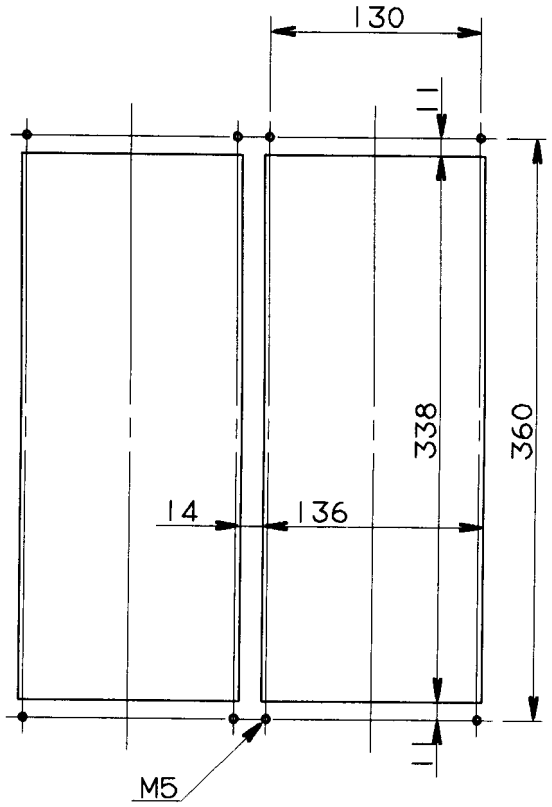

NOTE
1 Attach a packing (acrylonitrile-butadiene rubber, NBR [soft type]) for protection against oil and dust.
2 Reinforce the right and left sides of the panel cut-out in the power magnetics cabinet by using fittings such as angles to maintain satisfactory contact between the sheet metal of the power magnetics cabinet and the flange of the amplifier.

(d) 300-mm-wide amplifier (when two units are installed side-by-side)

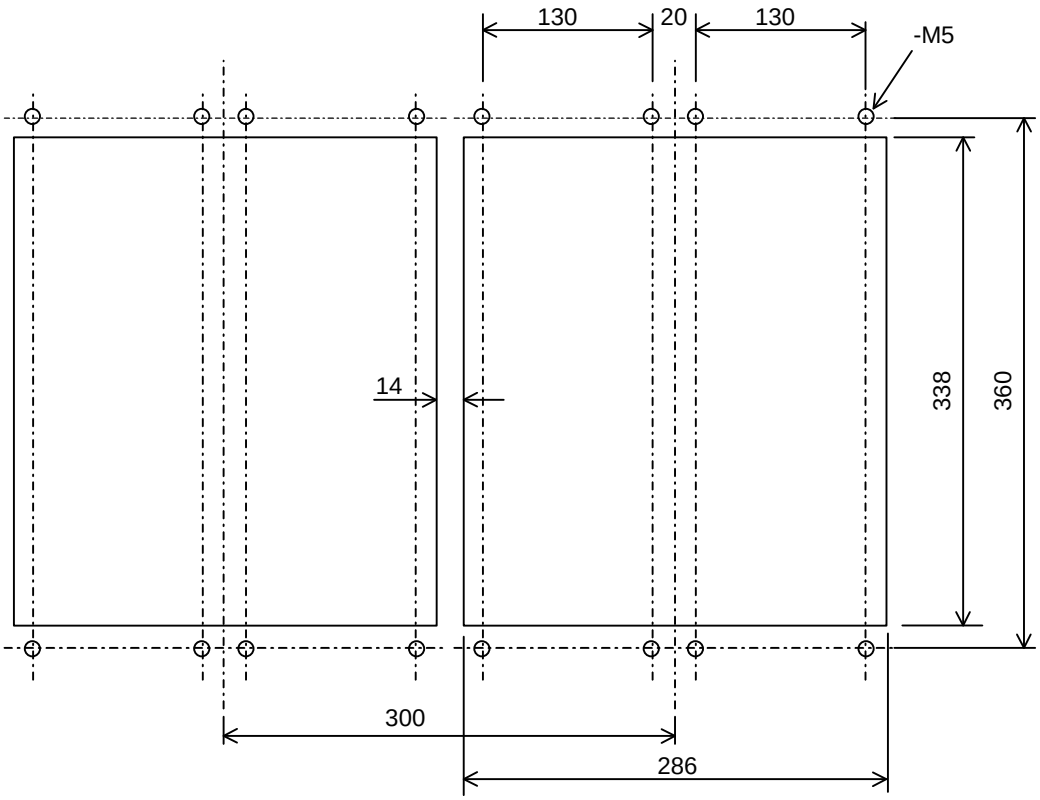

NOTE
1 Attach a packing (acrylonitrile-butadiene rubber, NBR [soft type]) for protection against oil and dust.
2 Reinforce the right and left sides of the panel cut-out in the power magnetics cabinet by using fittings such as angles to maintain satisfactory contact between the sheet metal of the power magnetics cabinet and the flange of the amplifier.

(e) Regenerative discharge unit (A06B-6089-H510)

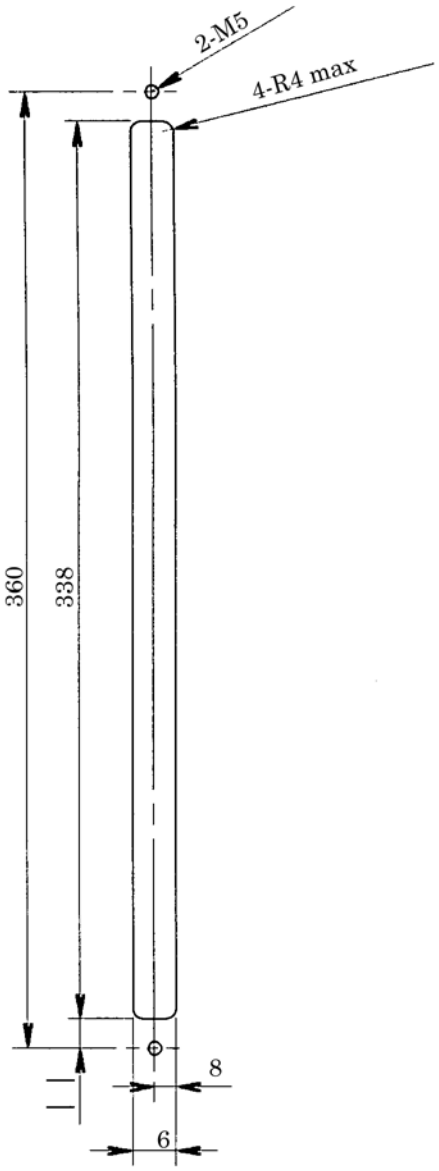

(f) Regenerative discharge unit (A06B-6089-H500)

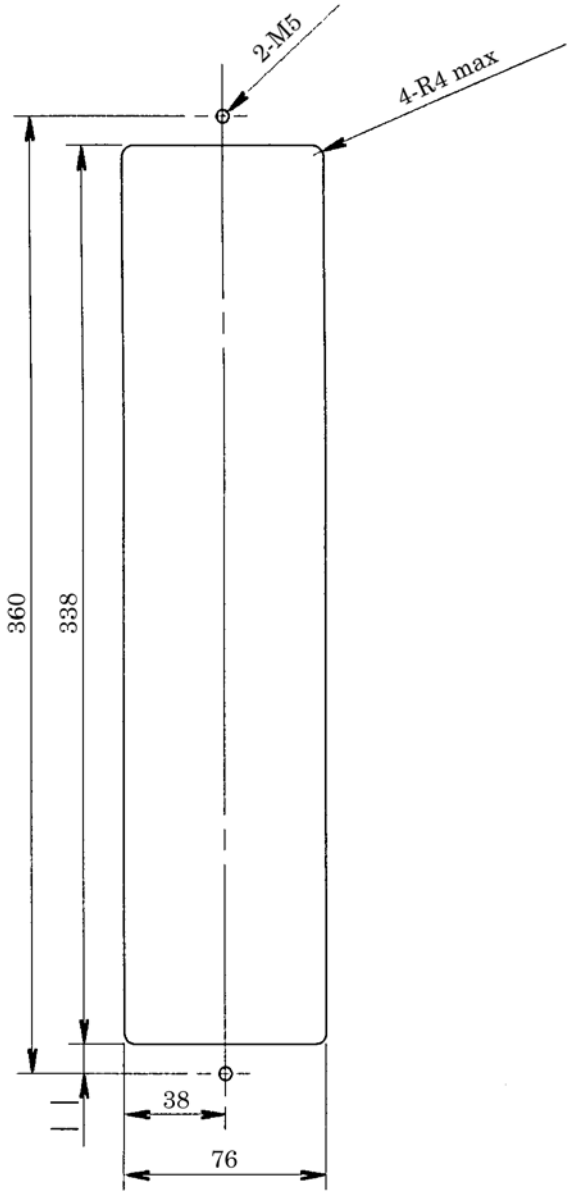

NOTE
Attach a packing (acrylonitrile-butadiene rubber, NBR [soft type]) for protection against oil and dust.

(g) Regenerative discharge unit (A06B-6089-H711 to -H713)

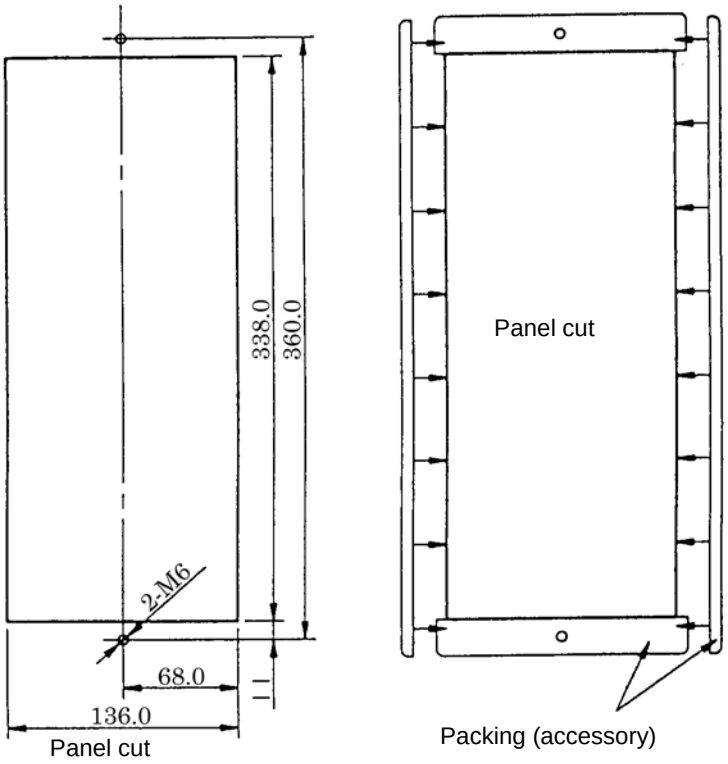

NOTE
Attach a packing (acrylonitrile-butadiene rubber, NBR [soft type]) for protection against oil and dust.

(h) Dynamic brake module

A06B-6079-H401 **A06B-6069-H300**

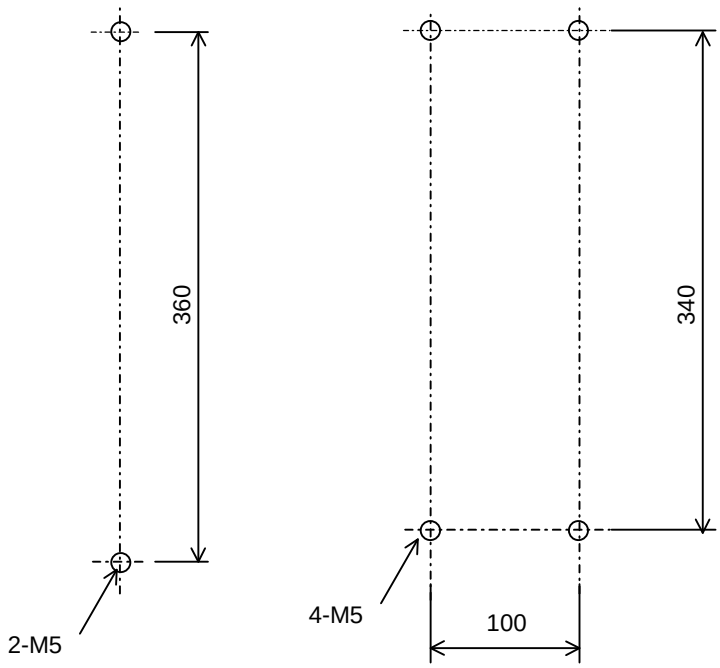

9 CONNECTION

Chapter 9, "CONNECTION", consists of the following sections:

9.1 TOTAL CONNECTION DIAGRAM.....193
9.2 CONNECTOR LOCATION.....195
9.3 CABLE CONNECTION DETAILS.....207
9.4 DETAILS OF CONNECTORS.....301

9.1 TOTAL CONNECTION DIAGRAM

The following connection diagram is an example of combining a αi PS + a αi SP + a 2-axis αi SV. For detailed descriptions about how to connect these amplifiers, see their respective connection diagrams.

200-V input series

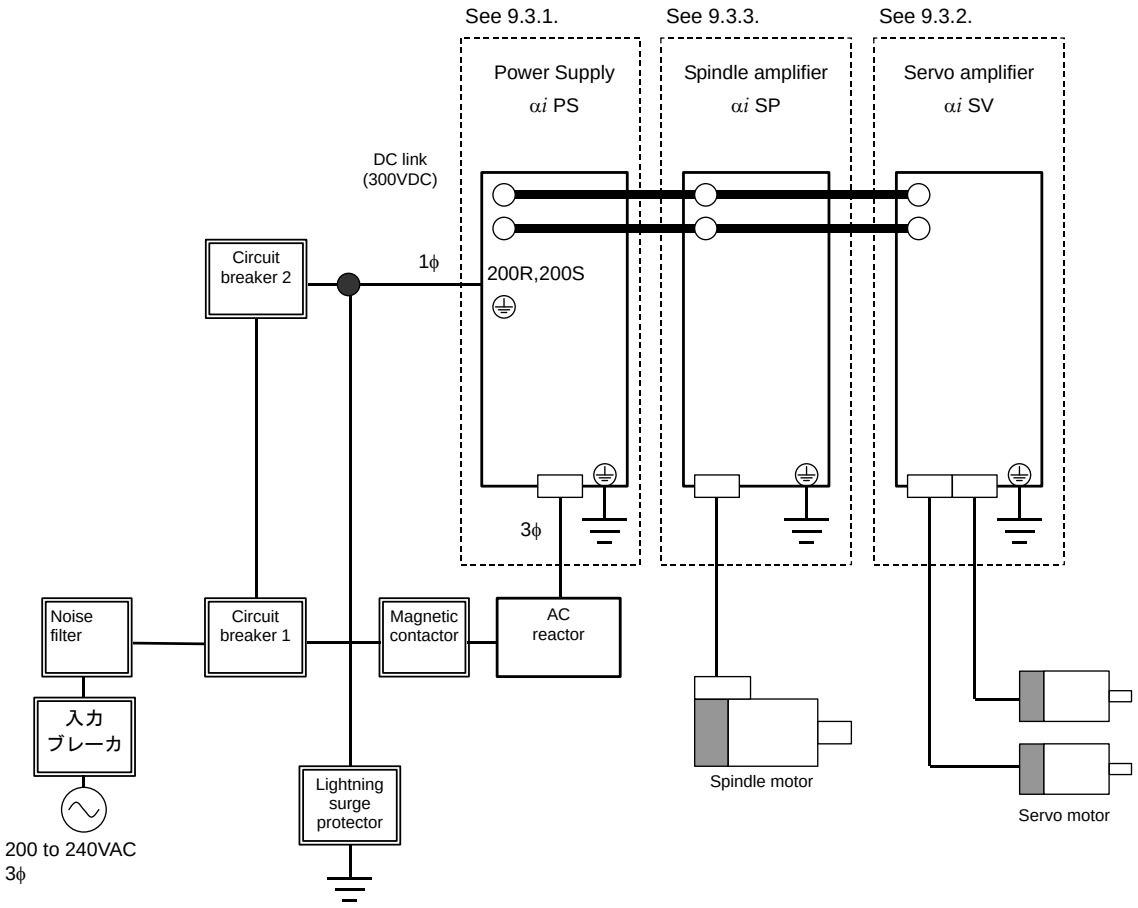

⚠ CAUTION

1 To meet the EMC Directive operating in EU countries, a noise filter must be installed.
2 Install the noise filter more nearer to the power supply than the magnetic contactor.
3 When the circuit breaker trips, the contact of the magnetic contactor may be melted. Before turning on the circuit breaker, make sure that the contact is not melted.

400-V input series

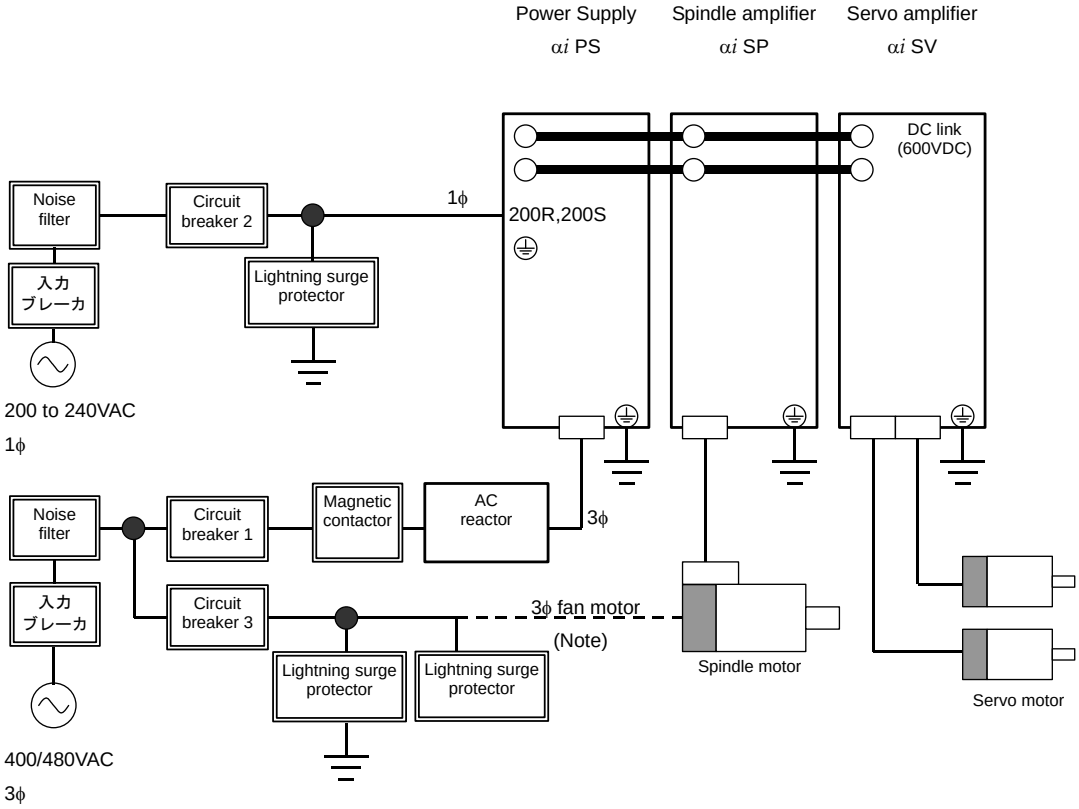

⚠ CAUTION

1 When the spindle motor model αi I 1HV, αi I 1.5HV, αi I 2HV*i*, αi I 3HV, αi I_T 1HV, αi I_T 2HV, and αi I_T 3HV is used, the specification of the fan motor is below: Single phase, 200/230 VAC

2 To meet the EMC Directive operating in EU countries, a noise filter must be installed.

3 Install the noise filter more nearer to the power supply than the magnetic contactor.

4 When the circuit breaker trips, the contact of the magnetic contactor may be melted. Before turning on the circuit breaker, make sure that the contact is not melted.

5 Breaker 3 is used to interrupt the lightning surge protector. Since the lightning surge protector is disabled if breaker 3 trips, it is necessary to issue a warning during the trip.

NOTE

When the power specification of the fan motor of the spindle motor is 400 V, breaker 3 can also be used for the fan motor.

9.2 CONNECTOR LOCATION

9.2.1 αi PS series

(a) αi PS 5.5

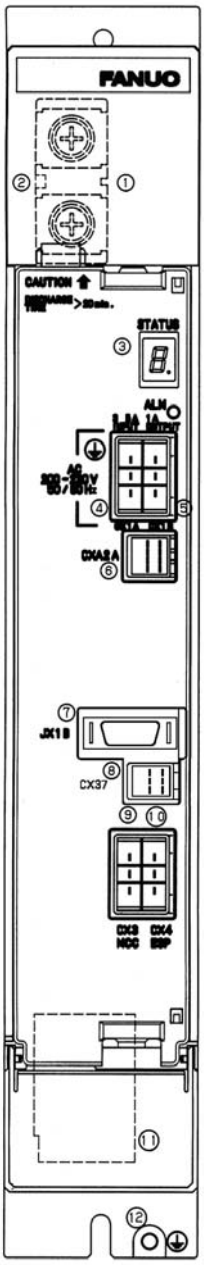

Table.9.2.1(a) Names of connectors and terminal blocks

	Names	Display	Remarks
1	DC link terminal block		Display the terminal block TB1
2	DC link charge LED		(Warning)
3	Status LED	STATUS	
4	200VAC input connector	CX1A	
5	200VAC output connector	CX1B	
6	Output connector for αi PS interface	CXA2A	24VDC power supply
7	Connector for connecting power failure backup module	JX1B	
8	Connector for power failure detection output	CX37	
9	Connector for connecting main Power supply magnetic contactor control signal	CX3	
10	Connector for ESP signal	CX4	
11	Connector for motor power line	CZ1	
12	Tapped hole for grounding the flange	⏚	

> ⚠ **WARNING**
> When the DC link charge LED is lit, touching parts in the amplifier or cables connected is hazardous; never touch them.

> ⚠ **CAUTION**
> A06B-6110-H**** and A06B-6120-H**** do not have CX37.

(b) αi PS 11, αi PS 15 , αi PS 11HV, αi PS 18HV

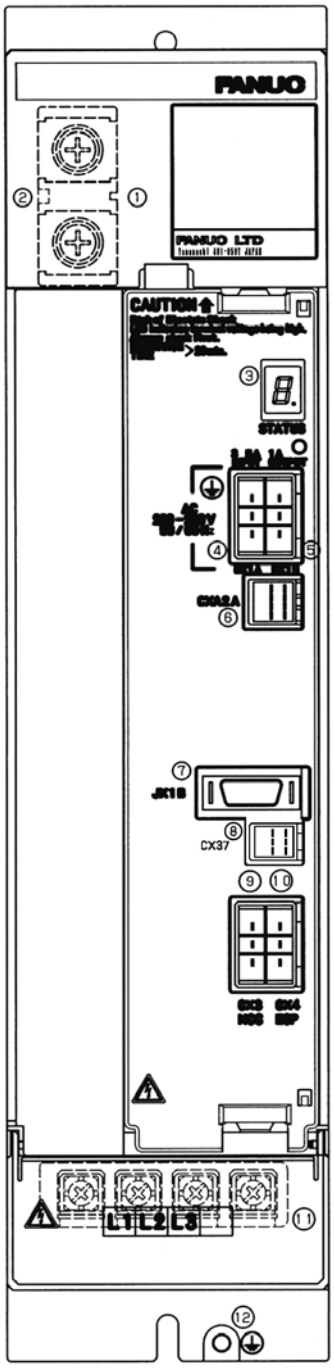

Table.9.2.1(b) Names of connectors and terminal blocks

	Names	Display	Remarks
1	DC link terminal block		Display the terminal block TB1
2	DC link charge LED		(Warning)
3	Status LED	STATUS	
4	200VAC input connector	CX1A	
5	200VAC output connector	CX1B	
6	Output connector for αi PS interface	CXA2A	24VDC power supply
7	Connector for connecting power failure backup module	JX1B	
8	Connector for power failure detection output	CX37	
9	Connector for connecting main Power supply magnetic contactor control signal	CX3	
10	Connector for ESP signal	CX4	
11	Terminal block for motor power line	TB2	
12	Tapped hole for grounding the flange	⏚	

> ⚠ **WARNING**
> When the DC link charge LED is lit, touching parts in the amplifier or cables connected is hazardous; never touch them.

> ⚠ **CAUTION**
> A06B-6110-H**** and A06B-6120-H**** do not have CX37.

(c) αi PS 26, αi PS 30, αi PS 37, αi PS 30HV, αi PS 45HV

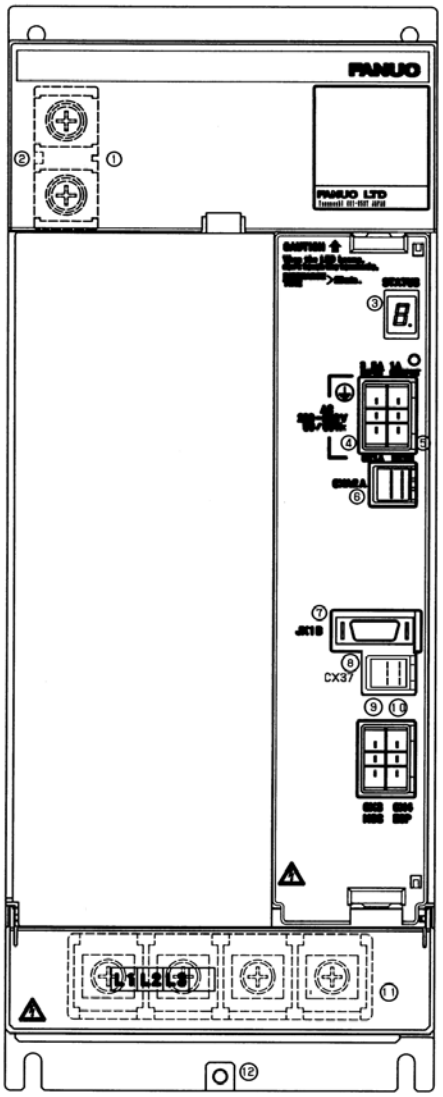

Table.9.2.1(c) Names of connectors and terminal blocks

	Names	Display	Remarks
1	DC link terminal block		Display the terminal block TB1
2	DC link charge LED		(Warning)
3	Status LED	STATUS	
4	200VAC input connector	CX1A	
5	200VAC output connector	CX1B	
6	Output connector for αi PS interface	CXA2A	24VDC power supply
7	Connector for connecting power failure backup module	JX1B	
8	Connector for power failure detection output	CX37	
9	Connector for main power MCC control signal	CX3	
10	Connector for ESP signal	CX4	
11	Terminal block for motor power line	TB2	
12	Tapped hole for grounding the flange	⏚	

⚠ WARNING
When the DC link charge LED is lit, touching parts in the amplifier or cables connected is hazardous; never touch them.

⚠ CAUTION
A06B-6110-H**** and A06B-6120-H**** do not have CX37.

(d) αi PS 55, αi PS 75HV, αi PS 100HV

Table.9.2.1(d) Names of connectors and terminal blocks

	Names	Display	Remarks
1	DC link terminal block		Display the terminal block TB1
2	DC link charge LED		(Warning)
3	Status LED	STATUS	
4	200VAC input connector	CX1A	
5	200VAC output connector	CX1B	
6	Output connector for αi PS interface	CXA2A	24VDC power supply
7	Connector for connecting power failure backup module	JX1B	
8	Connector for power failure detection output	CX37	
9	Connector for main power MCC control signal	CX3	
10	Connector for ESP signal	CX4	
11	Terminal block for motor power line	TB2	
12	Tapped hole for grounding the flange	⏚	

> ⚠ **WARNING**
> When the DC link charge LED is lit, touching parts in the amplifier or cables connected is hazardous; never touch them.

> ⚠ **CAUTION**
> A06B-6110-H**** and A06B-6120-H**** do not have CX37.

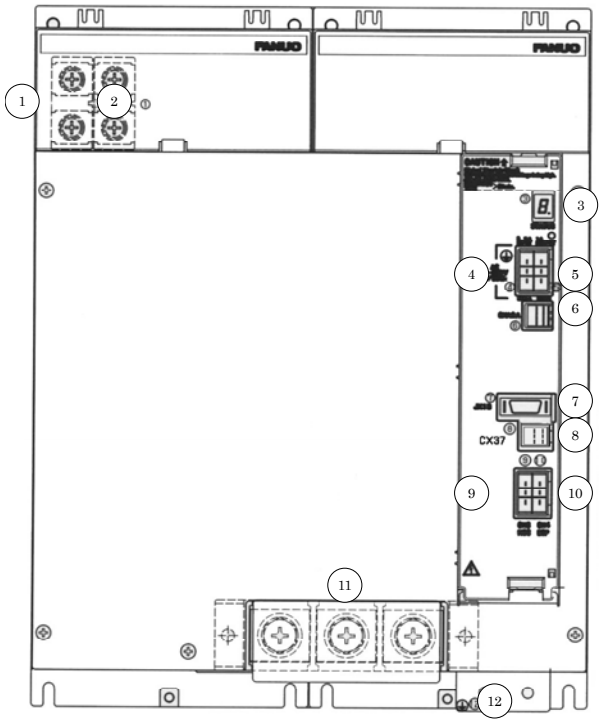

(e) αi PS_R 3 , αi PS_R 5.5

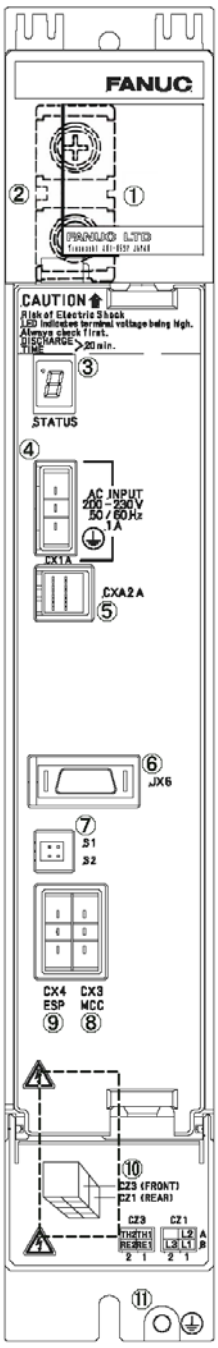

Table.9.2.1(e) Names of connectors and terminal blocks

	Names	Display	Remarks
1	DC link terminal block		Display the terminal block TB1
2	DC link charge LED		(Warning)
3	Status LED	STATUS	
4	200VAC input connector	CX1A	
5	Output connector for αi PS interface	CXA2A	24VDC power supply
6	Not used	JX6	
7	Not used	S1 S2	S1：Connected S2：Open
8	Connector for main power MCC control signal	CX3	
9	Connector for ESP signal	CX4	
10-1	Terminal block for motor power line	CZ1	XX key
10-2	Terminal block for regenerative discharge resistor	CZ3	YY key
11	Tapped hole for grounding the flange	⏚	

> ⚠ **WARNING**
> When the DC link charge LED is lit, touching parts in the amplifier or cables connected is hazardous; never touch them.

9.2.2 αi SV series

(a) 60/90mm-wide αi SV series

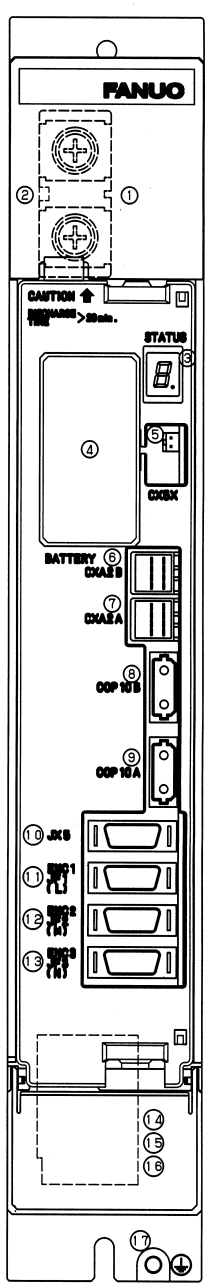

Table.9.2.2(a) Names of connectors and terminal blocks

No.	Names	Display	Remarks
1	DC link terminal block		Display the terminal block TB1
2	DC link charge LED		(Warning)
3	Status LED	STATUS	
4	Location of the batteries for the αi SV built-in-type absolute Pulsecoder	BATTERY	
5	Battery connector for the αi SV built-in-type absolute Pulsecoder	CX5X	
6	Input connector for αi PS interface	CXA2B	24VDC power supply The interface for the absolute Pulsecoder batteries is included.
7	Output connector for αi PS interface	CXA2A	
8	FSSB optical input connector	COP10B	
9	FSSB optical output connector	COP10A	
10	Signal check connector	JX5	Unused
11	Pulsecoder connector : L axis	ENC1/JF1	
12	Pulsecoder connector : M axis	ENC2/JF2	
13	Pulsecoder connector : N axis	ENC3/JF3	
14	Connector for motor power line: L axis	CZ2L	For αi SV 1-axis, CZ2
15	Connector for motor power line: M axis	CZ2M	
16	Connector for motor power line: N axis	CZ2N	
17	Tapped hole for grounding the flange	⏚	

> ⚠ **WARNING**
> When the DC link charge LED is lit, touching parts in the amplifier or cables connected is hazardous; never touch them.

(b) αi SV 360, αi SV 180HV

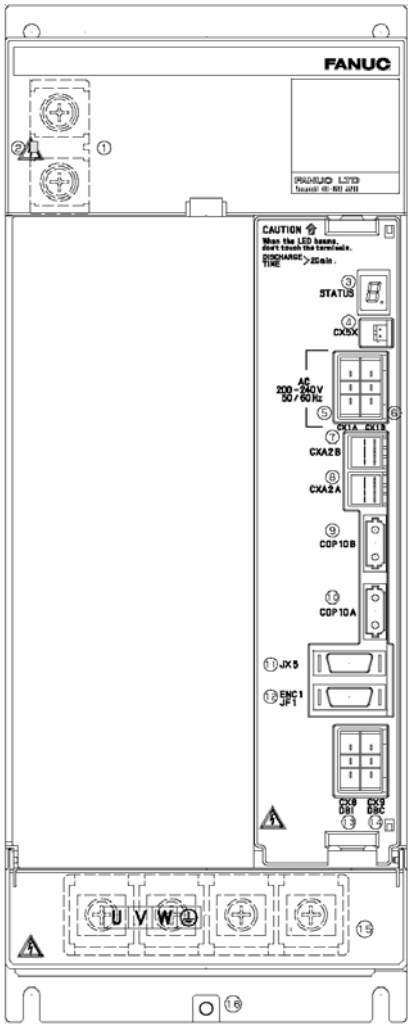

Table.9.2.2(b) Names of connectors and terminal blocks

No.	Names	Display	Remarks
1	DC link terminal block		Display the terminal block TB1
2	DC link charge LED		(Warning)
3	Status LED	STATUS	
4	Battery connector for the αi SV built-in-type absolute Pulsecoder	CX5X	
5	200VAC power supply input connector	CX1A	Power supply for DB
6	200VAC power supply input connector	CX1B	
7	Input connector for αi PS interface	CXA2B	24VDC power supply The interface for the absolute Pulsecoder batteries is included.
8	Output connector for αi PS interface	CXA2A	
9	FSSB optical input connector	COP10B	
10	FSSB optical output connector	COP10A	
11	Signal check connector	JX5	Unused
12	Pulsecoder connector	ENC1/JF1	
13	Dynamic module interface for connector	CX8	
14	Connector for the magnetic contactor drive coil of the dynamic brake module	CX9	
15	Terminal block for connection to motor power line		Display the terminal block TB2
16	Tapped hole for grounding the flange	⏚	

> ⚠ **WARNING**
> When the DC link charge LED is lit, touching parts in the amplifier or cables connected is hazardous; never touch them.

(c) αi SV 360HV

Table.9.2.2(c) Names of connectors and terminal blocks

No.	Names	Display	Remarks
1	DC link terminal block		Display the terminal block TB1
2	DC link charge LED		(Warning)
3	Status LED	STATUS	
4	Battery connector for the αi SV built-in-type absolute Pulsecoder	CX5X	
5	200VAC power supply input connector	CX1A	power supply for DB
6	200VAC power supply input connector	CX1B	
7	Input connector for αi PS interface	CXA2B	24VDC power supply The interface for the absolute Pulsecoder batteries is included.
8	Output connector for αi PS interface	CXA2A	
9	FSSB optical input connector	COP10B	
10	FSSB optical output connector	COP10A	
11	Signal check connector	JX5	Unused
12	Pulsecoder connector	ENC1/JF1	
13	Dynamic module interface for connector	CX8	
14	Connector for the magnetic contactor drive coil of the dynamic brake module	CX9	
15	Terminal block for connection to motor power line		Display the terminal block TB2
16	Tapped hole for grounding the flange	⏚	

> ⚠ **WARNING**
> When the DC link charge LED is lit, touching parts in the amplifier or cables connected is hazardous; never touch them.

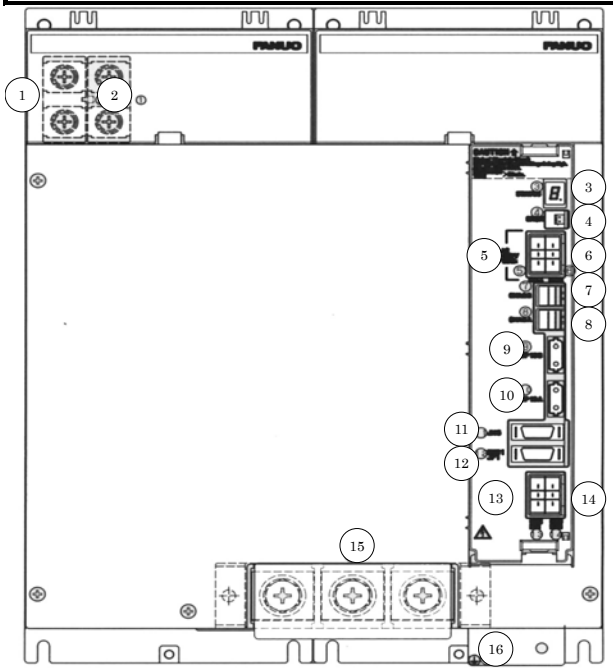

9.2.3 αi SP Series

(a) αi SP 2.2 , αi SP 5.5 , αi SP 5.5HV (TYPE A, B)

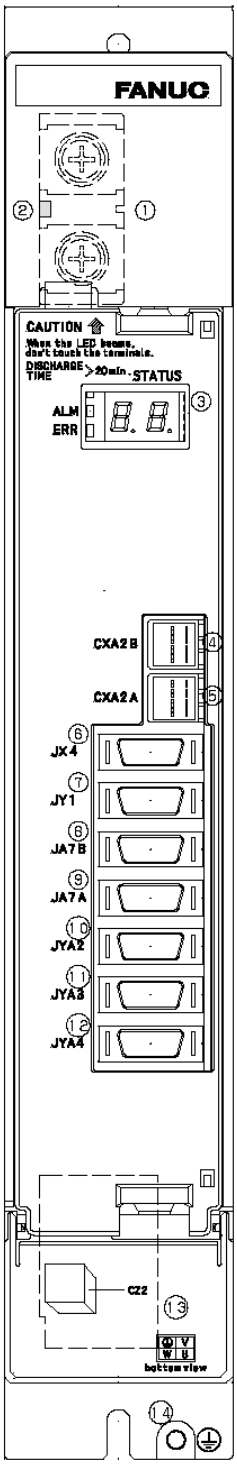

Table.9.2.3(a) Names of connectors and terminal blocks

	Names	Display	Remarks
1	DC link terminal block		Display the terminal block TB1
2	DC link charge LED		(Warning)
3	Status LED	STATUS	
4	Input connector for αi PS interface	CXA2B	24VDC power supply
5	Output connector for αi PS interface	CXA2A	
6	Position coder signal *1 Signal for communication between αi SP units *1 Excitation off signal *2	JX4	*1 TYPE B only
7	Connector for load meter and speedometer	JY1	The signal for the check board is also output.
8	Input connector for electric serial interface	JA7B	
9	Output connector for electric serial interface	JA7A	
10	Connector for spindle sensor for motor	JYA2	αi M, αi MZ, αi BZ, and αi CZ sensors
11	Connector for Positioncoder and external single rotation signal	JYA3	
12	Connector for separate spindle sensor	JYA4	TYPE B only
13	Connector for motor power line		Display the CZ2
14	Tapped hole for grounding the flange	⏚	

*2 Not supported by the A06B-6111, -6112, -6121, and -6122.

> ⚠ **WARNING**
> When the DC link charge LED is lit, touching parts in the amplifier or cables connected is hazardous; never touch them.

(b) αi SP 11 , αi SP 15 , αi SP 11HV , αi SP 15HV (TYPE A, B)

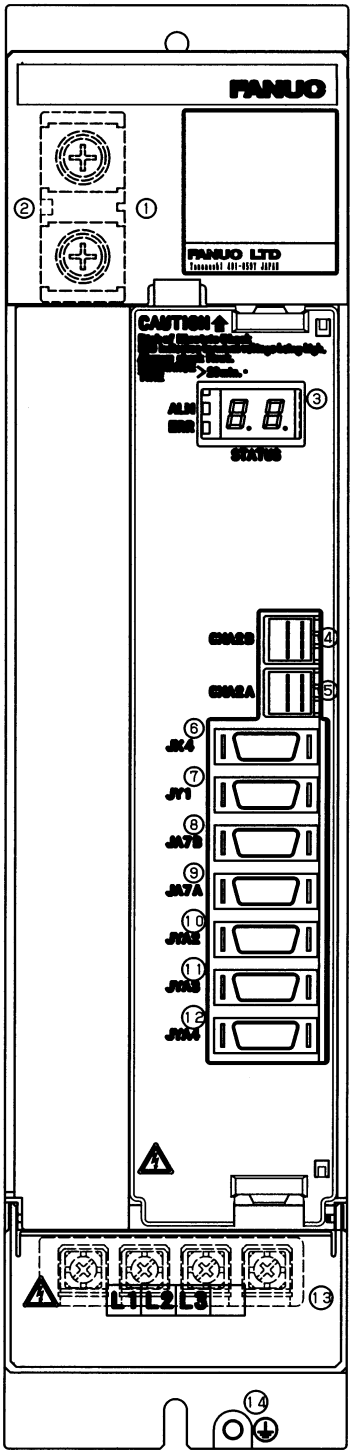

Table.9.2.3 (b) Names of connectors and terminal blocks

	Names	Display	Remarks
1	DC link terminal block		Display the terminal block TB1
2	DC link charge LED		(Warning)
3	Status LED	STATUS	
4	Input connector for αi PS interface	CXA2B	24VDC power supply
5	Output connector for αi PS interface	CXA2A	
6	Position coder signal *1 Signal for communication between αi SP units *1 Excitation off signal *2	JX4	*1 TYPE B only
7	Connector for load meter and speedometer	JY1	The signal for the check board is also output.
8	Input connector for electric serial interface	JA7B	
9	Output connector for electric serial interface	JA7A	
10	Connector for spindle sensor for motor	JYA2	αi M, αi MZ, αi BZ, and αi CZ sensors
11	Connector for Positioncoder and external single rotation signal	JYA3	
12	Connector for separate spindle sensor	JYA4	TYPE B only
13	Connector for motor power line		Display the TB2
14	Tapped hole for grounding the flange	⏚	

*2 Not supported by the A06B-6111, -6112, -6121, and -6122.

> ⚠ **WARNING**
> When the DC link charge LED is lit, touching parts in the amplifier or cables connected is hazardous; never touch them.

(c) αi SP 22, αi SP 26, αi SP 30, αi SP 30HV, αi SP 45HV (TYPE A, B)

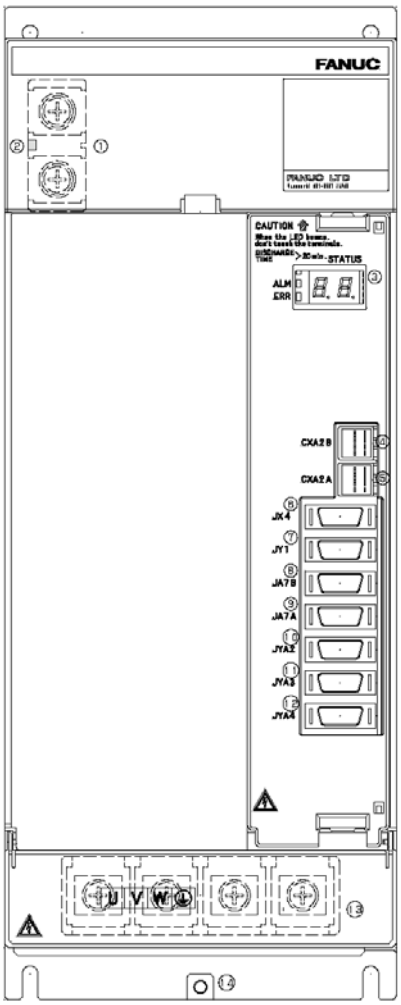

Table.9.2.3 (c) Names of connectors and terminal blocks

	Names	Display	Remarks
1	DC link terminal block		Display the terminal block TB1
2	DC link charge LED		(Warning)
3	Status LED	STATUS	
4	Input connector for PSM interface	CXA2B	24VDC power supply
5	Output connector for PSM interface	CXA2A	
6	Position coder signal *1 Signal for communication between αi SP units *1 Excitation off signal *2	JX4	*1 TYPE B only
7	Connector for load meter and speedometer	JY1	The signal for the check board is also output.
8	Input connector for electric serial interface	JA7B	
9	Output connector for electric serial interface	JA7A	
10	Connector for spindle sensor for motor	JYA2	αi M, αi MZ, αi BZ, and αi CZ sensors
11	Connector for Positioncoder and external single rotation signal	JYA3	
12	Connector for separate spindle sensor	JYA4	TYPE B only
13	Connector for motor power line		Display the TB2
14	Tapped hole for grounding the flange	⏚	

*2 Not supported by the A06B-6111, -6112, -6121, and -6122.

> ⚠ **WARNING**
> When the DC link charge LED is lit, touching parts in the amplifier or cables connected is hazardous; never touch them.

SPM-45*i*, SPM-55*i*, SPM-75HV*i*, SPM-100HV*i* (TYPE A, B)

Table.9.2.3 (d) Names of connectors and terminal blocks

	Names	Display	Remarks
1	DC link terminal block		Display the terminal block TB1
2	DC link charge LED		(Warning)
3	Status LED	STATUS	
4	Input connector for PSM interface	CXA2B	24VDC power supply
5	Output connector for PSM interface	CXA2A	
6	Position coder signal *1 Signal for communication between αi SP units *1 Excitation off signal *2	JX4	*1 TYPE B only
7	Connector for load meter and speedometer	JY1	The signal for the check board is also output.
8	Input connector for electric serial interface	JA7B	
9	Output connector for electric serial interface	JA7A	
10	Connector for spindle sensor for motor	JYA2	αi M, αi MZ, αi BZ, and αi CZ sensors
11	Connector for Positioncoder and external single rotation signal	JYA3	
12	Connector for separate spindle sensor	JYA4	TYPE B only
13	Connector for motor power line		Display the TB2
14	Tapped hole for grounding the flange	⏚	

*2 Not supported by the A06B-6111, -6112, -6121, and -6122.

> ⚠ **WARNING**
> When the DC link charge LED is lit, touching parts in the amplifier or cables connected is hazardous; never touch them.

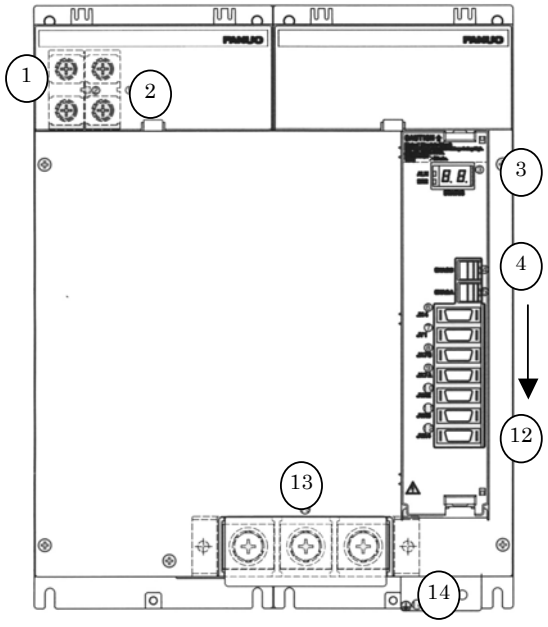

9.3 CABLE CONNECTION DETAILS

9.3.1 αi PS Series Connection Diagram

(a) αi PS (200-V input series)

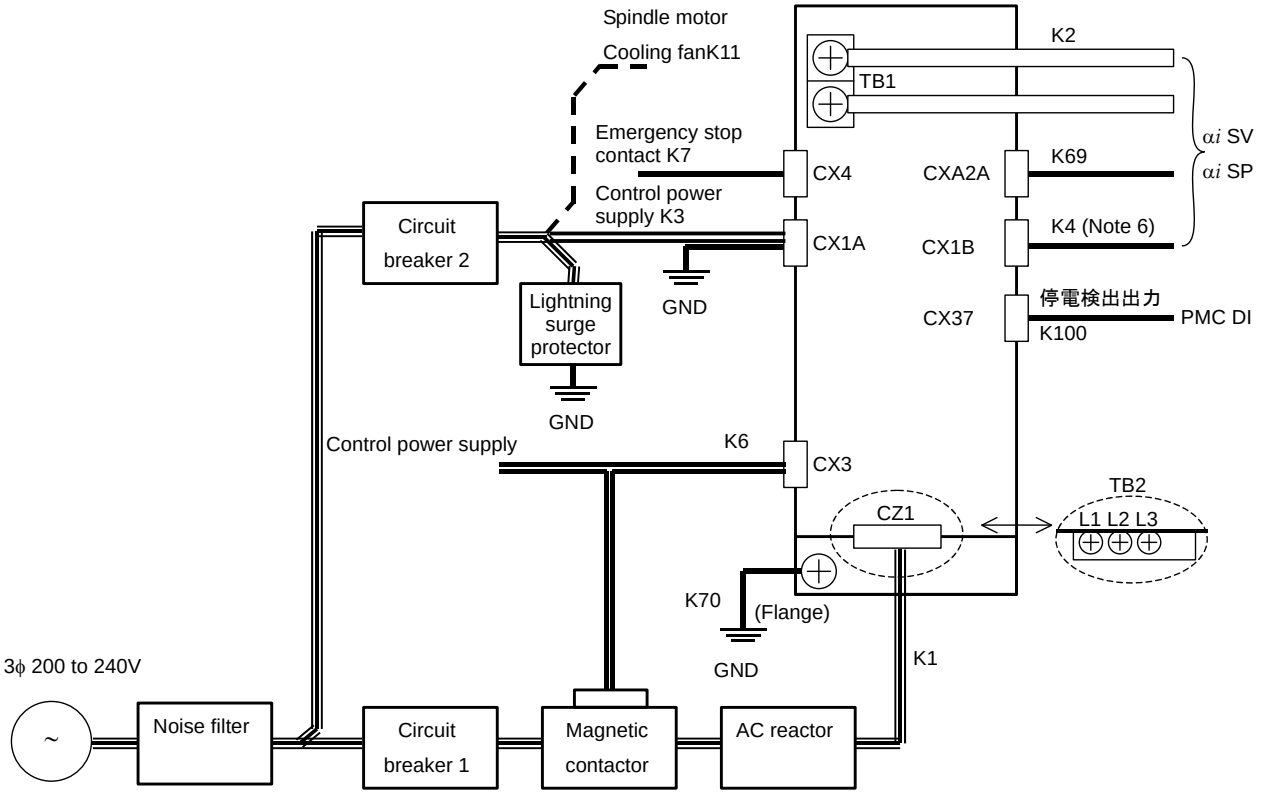

NOTE

1 Always install the circuit breakers, magnetic contactor, and AC reactor.
2 To protect the equipment from lightning surge voltages, install a lightning surge protector across each pair of power lines and across each power line and the grounding line at the power inlet of the power magnetics cabinet. See Appendix A, “FITTING A LIGHTNING SURGE PROTECTION DEVICE” for details.
3 Always connect the control power supply cable to the CX1A. If it is connected to the CX1B, fuses inside the unit may below.
4 See Section 5.2 for the type of the cable to be used for making a connection to a frame ground.
5 Install a noise filter more nearer to the power supply than the magnetic contactor for the αi PS.
6 Power supply for a dynamic brake module (DBM). When a DBM is not used, this power supply is unnecessary.
7 A06B-6110 and A06B-6120 do not have CX37.

(b) αi PS_R (200-V input series)

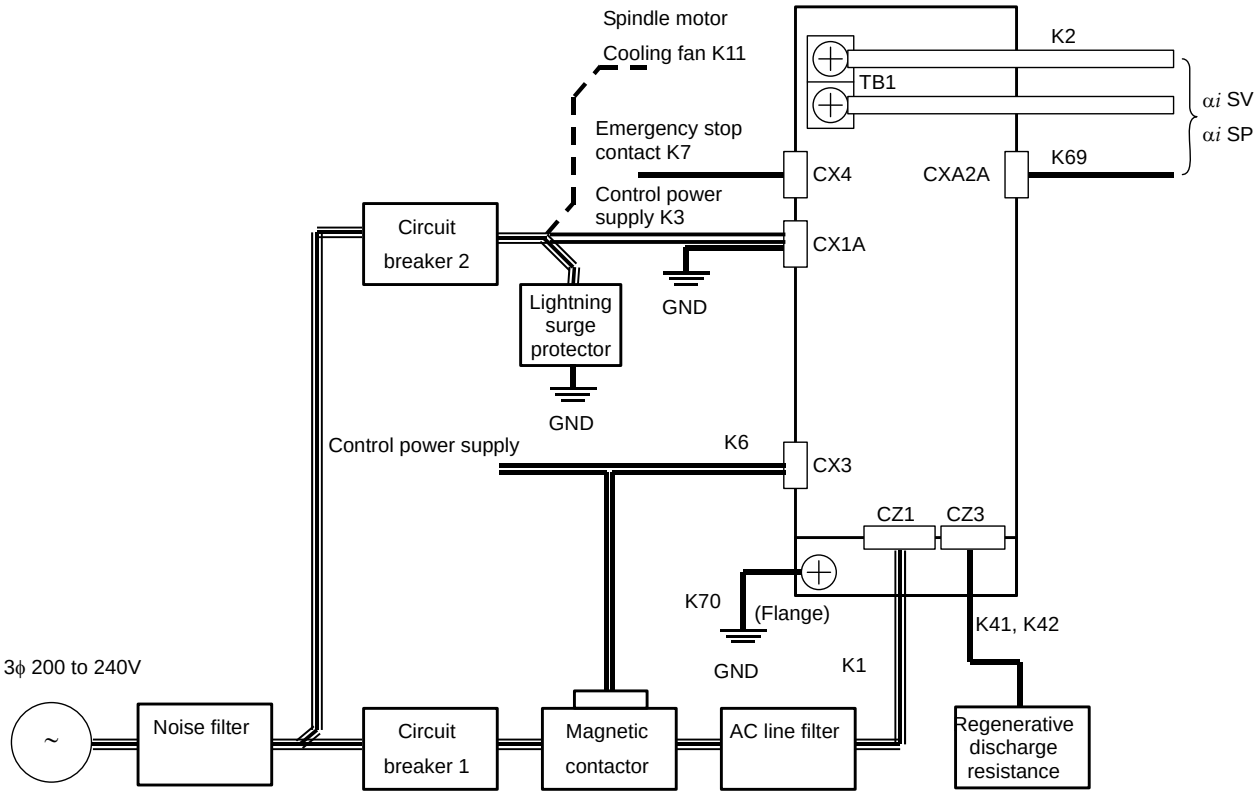

NOTE

1 Always install the circuit breakers, magnetic contactor, and AC reactor.
2 To protect the equipment from lightning surge voltages, install a lightning surge protector across each pair of power lines and across each power line and the grounding line at the power inlet of the power magnetics cabinet. See Appendix A, “FITTING A LIGHTNING SURGE PROTECTION DEVICE” for details.
3 Always connect the control power supply cable to the CX1A. If it is connected to the CX1B, fuses inside the unit may below.
4 See Section 5.2 for the type of the cable to be used for making a connection to a frame ground.
5 Install a noise filter more nearer to the power supply than the magnetic contactor for the αi PS.

(c) αi PS (400-V input series)

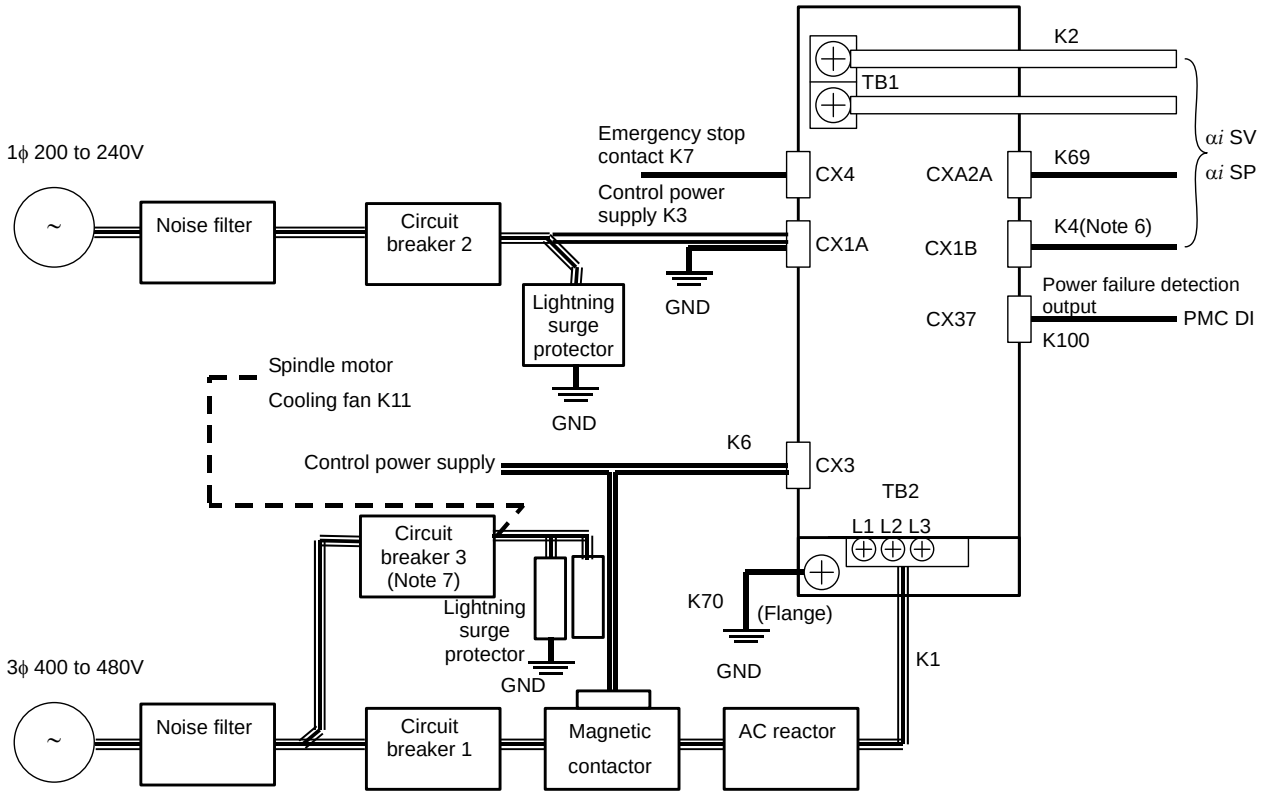

NOTE

1 Always install the circuit breakers, magnetic contactor, and AC reactor.
2 To protect the equipment from lightning surge voltages, install a lightning surge protector across each pair of power lines and across each power line and the grounding line at the power inlet of the power magnetics cabinet. See Appendix A, “FITTING A LIGHTNING SURGE PROTECTION DEVICE” for details.
3 Always connect the control power supply cable to the CX1A. If it is connected to the CX1B, fuses inside the unit may below.
4 See Section 5.2 for the type of the cable to be used for making a connection to a frame ground.
5 Install a noise filter more nearer to Power Supply than the magnetic contactor for the αi PS.
6 Power supply for a dynamic brake module (DBM). When a DBM is not used, this power supply is unnecessary.
7 Circuit breaker 3 is used to shut off the lightning surge protector. When circuit breaker 3 trips, the lightning surge protector does not function. So, the tripping state needs to be detected, and when it is detected, a warning needs to be issued.
8 A06B-6110 and A06B-6120 do not have CX37.

Connection on using two αi PS series amplifiers (200-V input)

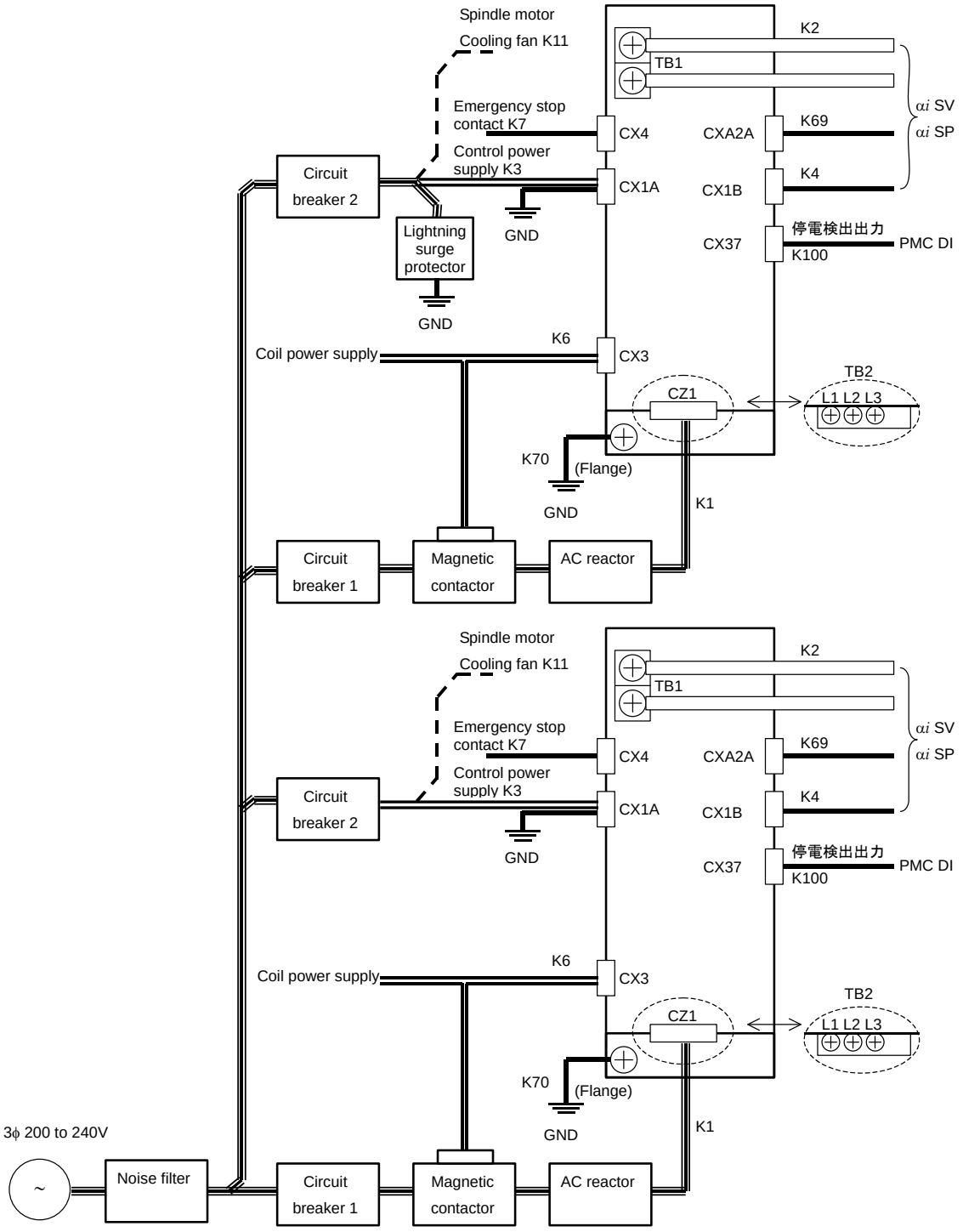

NOTE

1 Circuit breaker 1, circuit breaker 2, the magnetic contactor, and the AC reactor cannot be shared among αi PS units.
For each αi PS, select and use these devices having appropriate capacitance specifications.

2 The lightning surge protection device can be shared. For details, see Appendix A, "FITTING A LIGHTNING SURGE PROTECTION DEVICE".

Notes on using multiple αi PS series and βi series amplifiers

(a) An AC reactor for the αi PS cannot be used as an AC line filter of the βi series amplifier. Connect devices as follows:

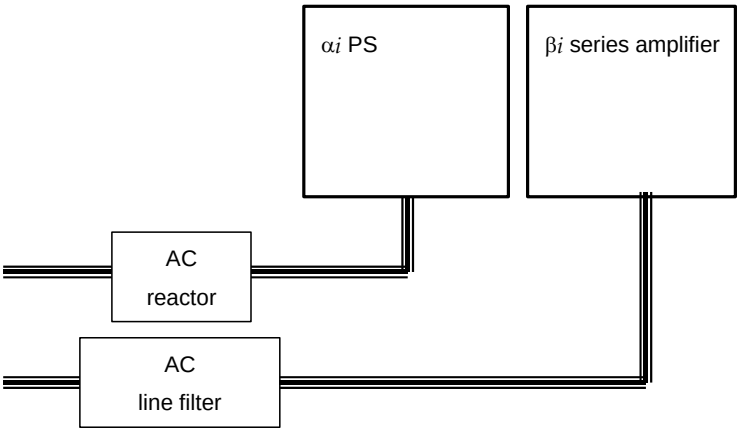

(b) An AC line filter for the αi PS_R cannot be shared with the βi series amplifier. Connect devices as follows:

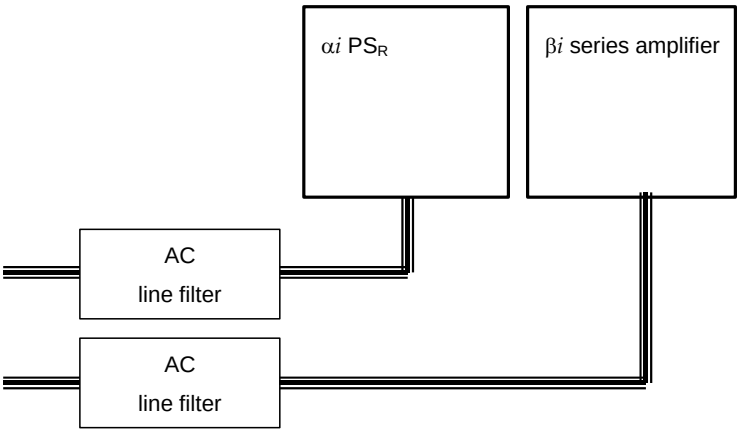

> ⚠ **CAUTION**
> When multiple αi PS series and βi series amplifiers are used, sharing an AC reactor or AC line filter among these amplifiers can result in an alarm or can damage these amplifiers.

Note on using multiple αi PS series and βi series amplifiers 2

(a) Be careful not to connect DC links of multiple PS amplifiers incorrectly.

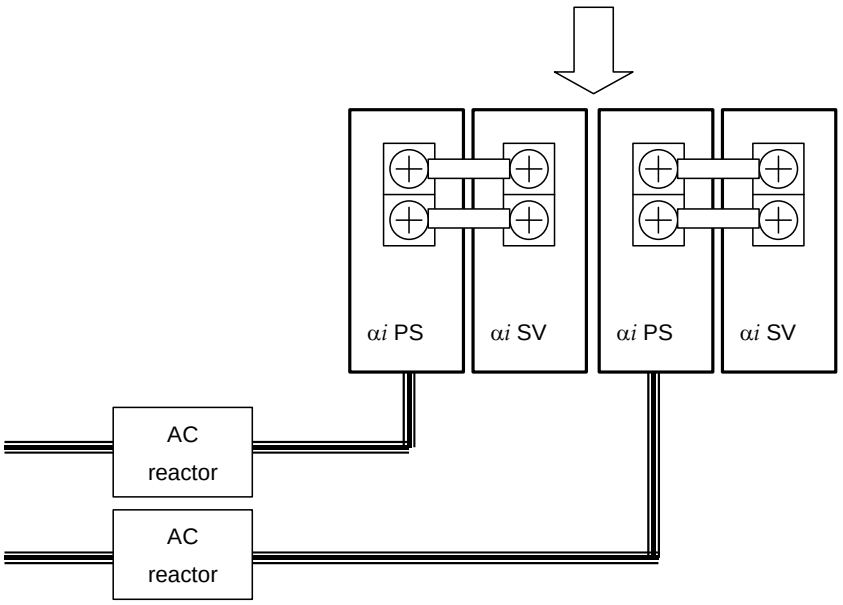

⚠ CAUTION
When multiple αi PS series amplifiers are used, connecting their DC links can result in an alarm or can damage these amplifiers.

9.3.1.1 Details of cable K1 (power supply line)

Cable K1 is used to supply main power to the α*i* PS. Make sure that the cable used between the power supply and α*i* PS satisfies the requirements listed in Table 9.3.1.1.

(1) For α*i* PS
- α*i* PS 5.5

(a) For a power supply voltage of 200 to 240 VAC

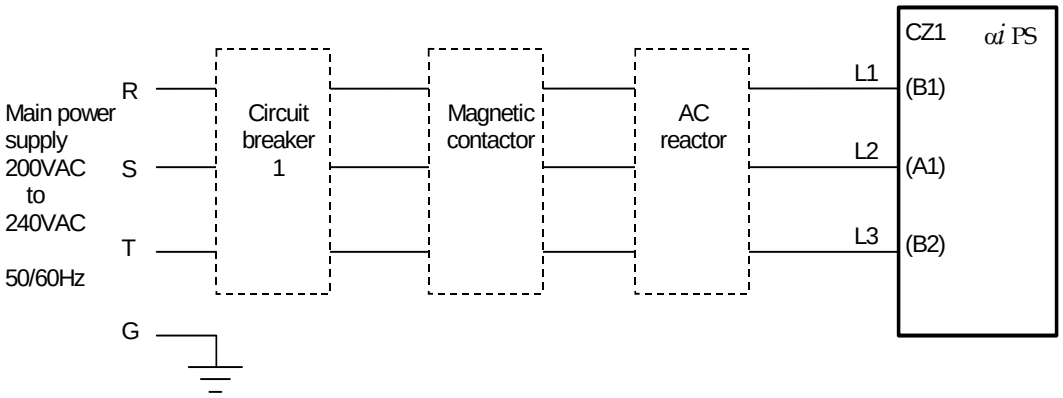

(b) For a power supply voltage of 400 to480 VAC

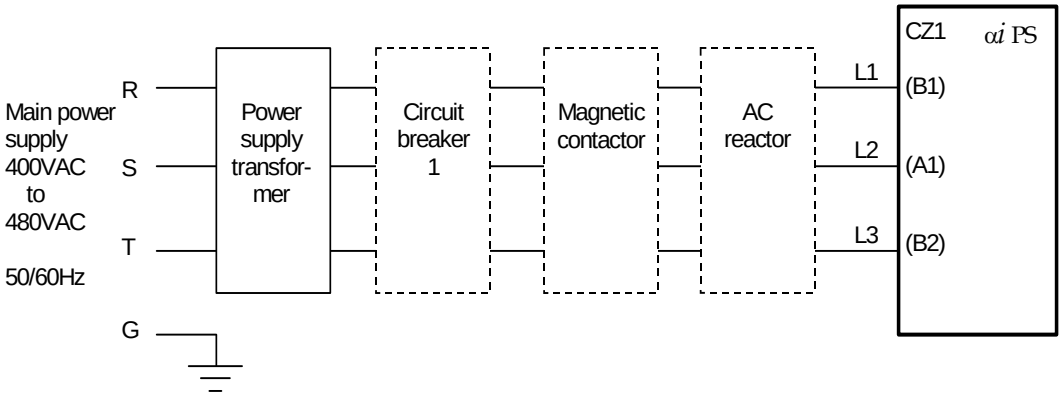

Pin location of CZ1

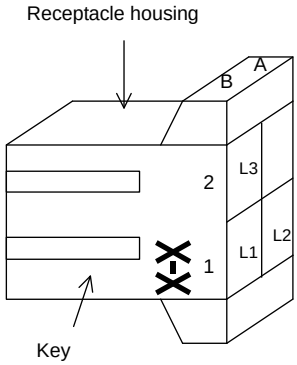

Table 9.3.1.1(a) Cable K1 Specifications (αi PS5.5)

Model	Applicable cable		
	Heavy-duty power cable (Note 1)	Heat-resistant cable (Note 2)	UL 規格対応ケーブル
αi PS 5.5	5.5mm^2	5.5mm^2	AWG8 以上

NOTE
1 Four-conductor polyvinyl heavy-duty power cable (JIS C3312) (VCT : heat-resistant 60°C)
2 Fire-retardant polyflex wire (heat-resistant 105°C) or equivalent to LMFC manufactured by The Furukawa Electric Co., Ltd.
3 The cross-section area of each cable is determined under the following conditions:
(1) At αi PS rated output
(2) Environment temperature of cable : 30°C
(3) Number of harnesses
3 (No current flows through the ground wire during normal operation.)
Select a required cable cross-section area according to the user environment and conditions.

Connector Specifications

モデル	Connector key (Note 1)	Applicable contact (Note 1)
αi PS 5.5	XX 1-917807-2	M size 316041-6

See Subsection 9.4 for detailed explanations about the specification of the D-5000.

NOTE
Tyco Electronics AMP D-5000 series
Select a contact size according to the cross-section area of the cable.

- αi PS 11 ~ αi PS 55

(a) For a power supply voltage of 200 to 240 VAC

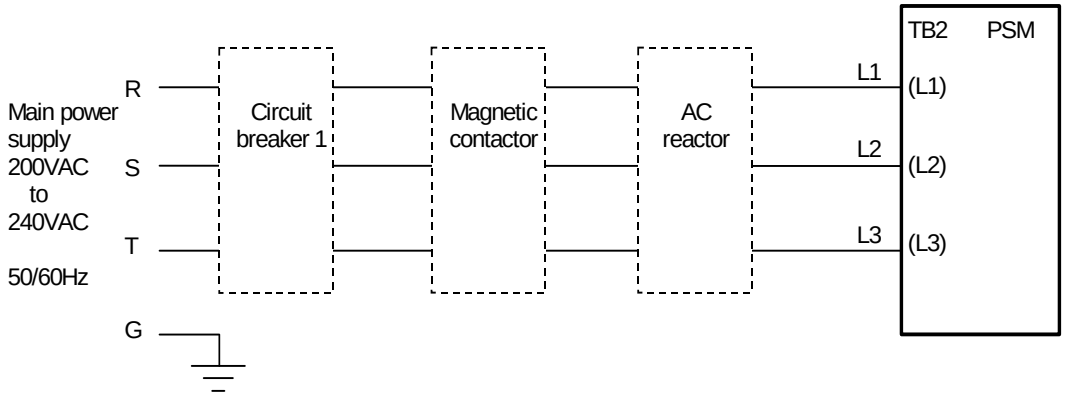

(b) For a power supply voltage of 400 to 480 VAC

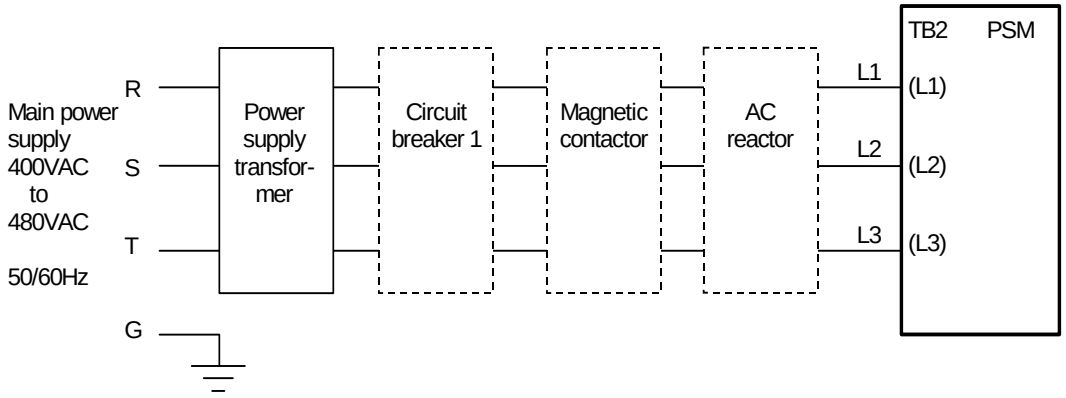

Table.9.3.1.1(b) Cable K1 Specifications, screw tightening torque (αi PS11 to αi PS55)

Model	Applicable cable			αi PS side		Reactor side	
	Heavy-duty power cable (Note 1)	Heat-resistant cable (Note 2)	Cable conforming to UL standard	Terminal screw	Tightening torque	Terminal screw	Tightening torque
αi PS 11	-	8mm^2 or more	AWG8 or lhigher	M4	1.1 to 1.5Nm	M5	2.0 to 2.5Nm
αi PS 15	14 mm^2 or more	14mm^2 or more	AWG4 or lhigher				
αi PS 26	-	22mm^2 or more	AWG2 or lhigher	M6	3.5 to 4.5Nm		
αi PS 30	-	22mm^2 or more	AWG2 or lhigher				
αi PS 37	-	38mm^2 or more	AWG1 or lhigher	M6 (Note 3)		M8	8.5 to 9.5Nm
αi PS 55	-	G: 40mm^2 or more	AWG1 or lhigher	M6	3.5 to 4.5Nm		
		R,S,T: 80mm^2 or more	AWG3/0 or lhigher	M10	1 to 16Nm		

* The AC reactor does not have polarity, so input and output may be connected to either side of the reactor.

NOTE

1 Four-conductor polyvinyl heavy-duty power cable (JIS C3312) (VCT : heat-resistant 60°C)
2 Fire-retardant polyflex wire (heat-resistant 105°C) or equivalent to LMFC manufactured by The Furukawa Electric Co., Ltd.
3 Applicable crimp terminal for αi PS : 38-6S
4 The cross-section area of each cable is determined under the following conditions:
   (1) At αi PS rated output
   (2) Environment temperature of cable : 30°C
   (3) Number of harnesses
      3 (No current flows through the ground wire during normal operation.)
   Select a required cable cross-section area according to the user environment and conditions.

(2) For αi PS_R

(a) For a power supply voltage of 200 to 240 VAC

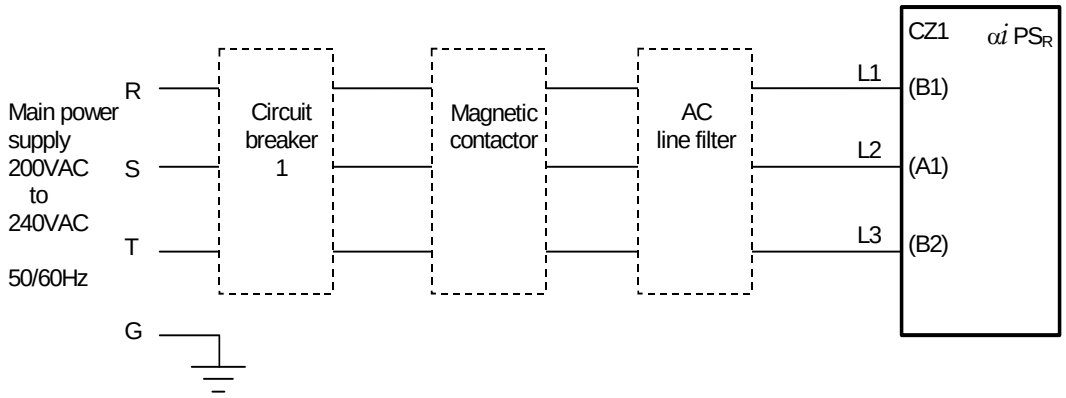

(b) For a power supply voltage other than 200 to 240 VAC

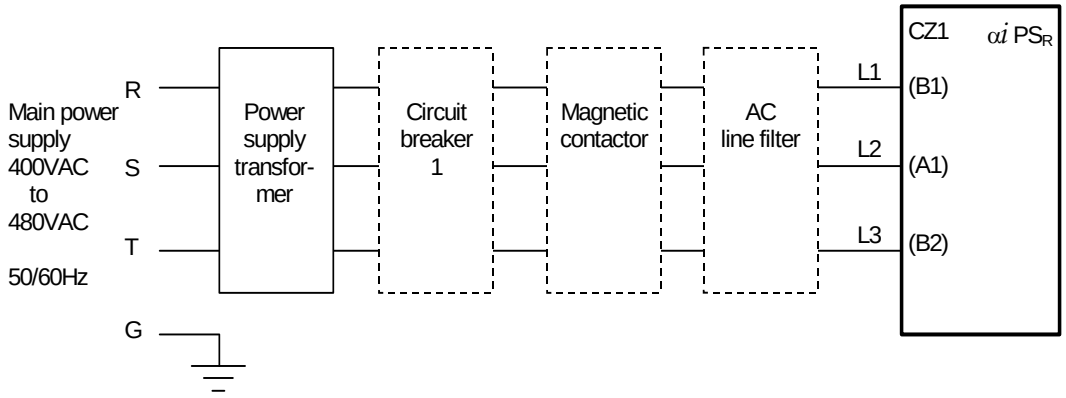

Table 9.3.1.1(c) Cable K1 Specifications, screw tightening torque

Mode	Applicable cable		
	Heavy-duty power cable (Note 1)	Heat-resistant cable (Note 2)	Cable conforming to UL standard
αi PS_R 3	3.5mm^2	3.5mm^2	AWG10
αi PS_R 5.5	5.5mm^2	5.5mm^2	AWG8

NOTE
1 Four-conductor polyvinyl heavy-duty power cable (JIS C3312) (VCT : heat-resistant 60°C)
2 Fire-retardant polyflex wire (heat-resistant 105°C) or equivalent to LMFC manufactured by The Furukawa Electric Co., Ltd.

Connector Specifications

Model	Connector key (Note 1)	Applicable contact (Note 1)
αi PS_R 3, 5.5	XX 1-917807-2	M size 316041-6

See Subsection 9.4 for detailed explanations about the specification of the D-5000.

NOTE
Tyco Electronics AMP D-5000 series
Select a contact size according to the cross-section area of the cable.

(3) For αi PS 400-V input type

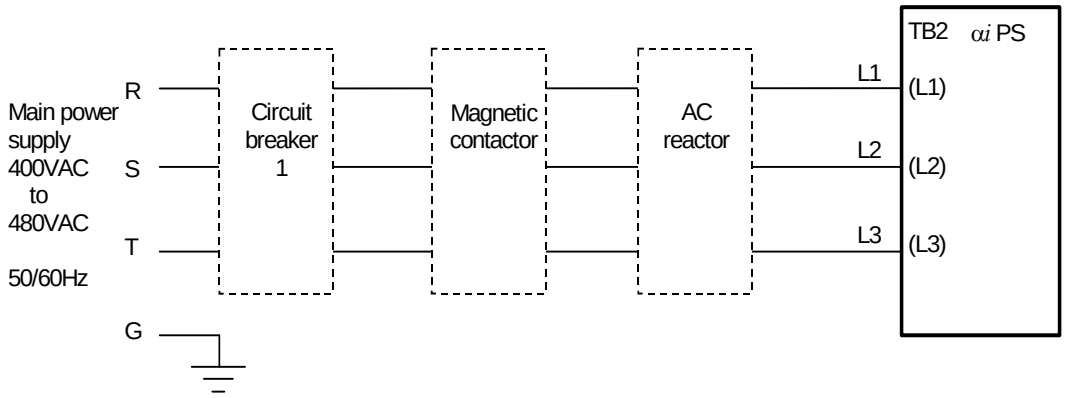

Table.9.3.1.1(d) Cable K1 Specifications

Model	Applicable cable			αi PS side		Reactor side	
	Heavy-duty power cable (Note 1)	Heat-resistant cable (Note 2)	Cable conforming to UL standard	Terminal screw	Tightening torque	Terminal screw	Tightening torque
αi PS 11HV	5.5mm^2 or more	5.5mm^2 or more	AWG8 or higher	M4	1.1 to 1.5Nm	M5	2.0 to 2.5Nm
αi PS 18HV	-	8mm^2 or more	AWG8 or higher				
αi PS 30HV	-	14mm^2 or more	AWG4 or higher	M6	3.5 to 4.5Nm	M8	8.5 to 9.5Nm
αi PS 45HV	-	22mm^2 or more	AWG2 or higher				
αi PS 75HV	-	G: 22mm^2 or more	AWG2 or higher	M6	3.5 to 4.5Nm	M10	15 to 16Nm
	-	R, S, T: 38mm^2 or more	AWG1 or higher	M10	15 to 16Nm		
αi PS 100HV		G: 40mm^2 or more	AWG1 or higher	M6	3.5 to 4.5Nm		
		R, S, T: 80mm^2 or more	AWG3/0 or higher	M10	15 to 16Nm		

NOTE

1 Four-conductor polyvinyl heavy-duty power cable (JIS C3312) (VCT : heat-resistant 60°C)
2 Fire-retardant polyflex wire (heat-resistant 105°C) or equivalent to LMFC manufactured by The Furukawa Electric Co., Ltd.
3 The cross-section area of each cable is determined under the following conditions:
  (1) At αi PS rated output
  (2) Environment temperature of cable : 30°C
  (3) Number of harnesses
    3 (No current flows through the ground wire during normal operation.)
  Select a required cable cross-section area according to the user environment and conditions.

9.3.1.2 Details of short bar K2

Short bar K2 supplies DC link voltage generated by the αi PS to individual modules.

When designing a short bar for connecting modules placed close to each other, refer to the "Specifications of short bars for connecting modules placed close to each other."

To determine the length of a short bar to be used for connecting modules placed separately, refer to "Location of terminal board TB1."

Optional short bars are available from FANUC. Refer to the "DC Link Short Bar Specifications."

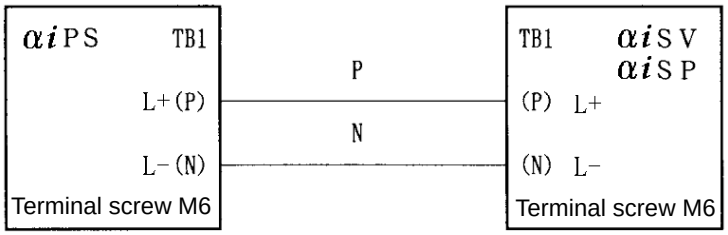

Specifications of short bars for connecting modules placed close to each other

(1) Specifications of short bars for connecting the modules

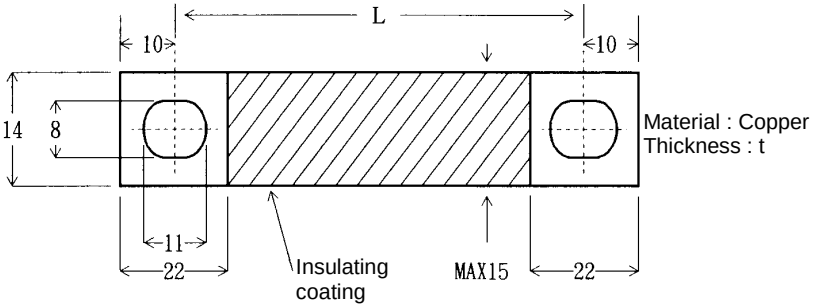

(2) Specifications of short bars for connecting the modules
(Figure example of short bars for connecting 300-mm-wide modules)

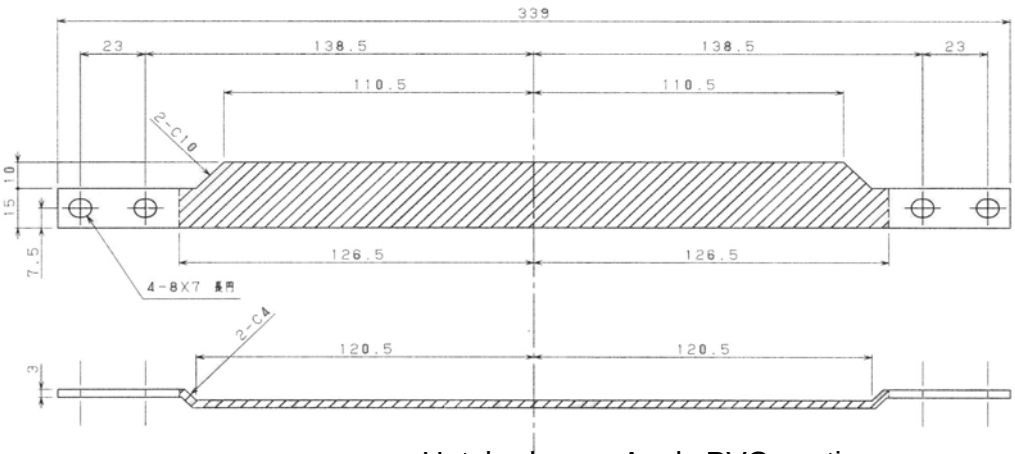

Hatched area: Apply PVC coating.
Thickness : 1t or more

Table.9.3.1.2 Short Bar K2 Specifications

Module location	Short bar length L	Short bar thickness t	Cross-section area (Note)
Unit of 300mm-wide	300mm	3.0mm	50mm^2
Unit of 150mm-wide	150mm	1.5mm	21mm^2
Unit of 90mm-wide	90mm	1.5mm	21 mm^2
Unit of 60mm-wide	60mm	1.5mm	21 mm^2

NOTE

1 Modules need not necessarily be connected with a short bar (copper plate).
If the modules cannot be placed close to each other, however, they cannot help being separated from each other.
If you connect them with a power cable, however, the cable may not be thinner than indicated below and must be insulated with heat-resistant polyvinyl.

2 When the width is 300 mm ((αi SP 45, αi SP 55, αi PS 55, αi SP 75HV, αi SP 100HV, αi PS 75HV, αi PS 100HV, αi SV 360HV), cabling needs to be performed using the two screws at P and N. So, use a dedicated short bar (A06B-6078-K841, two each per set).

Location of terminal block TB1 on each module

Fig.9.3.1.2(a) and Fig.9.3.1.2(b) show the location of terminal board TB1 on each module.
If you want to install modules at distances not specified herein, design short bars by referring to the dimensions shown below.
When designing a short bar for connecting 300-mm-wide modules in particular, conform to the above figure specifications and apply the above coating.

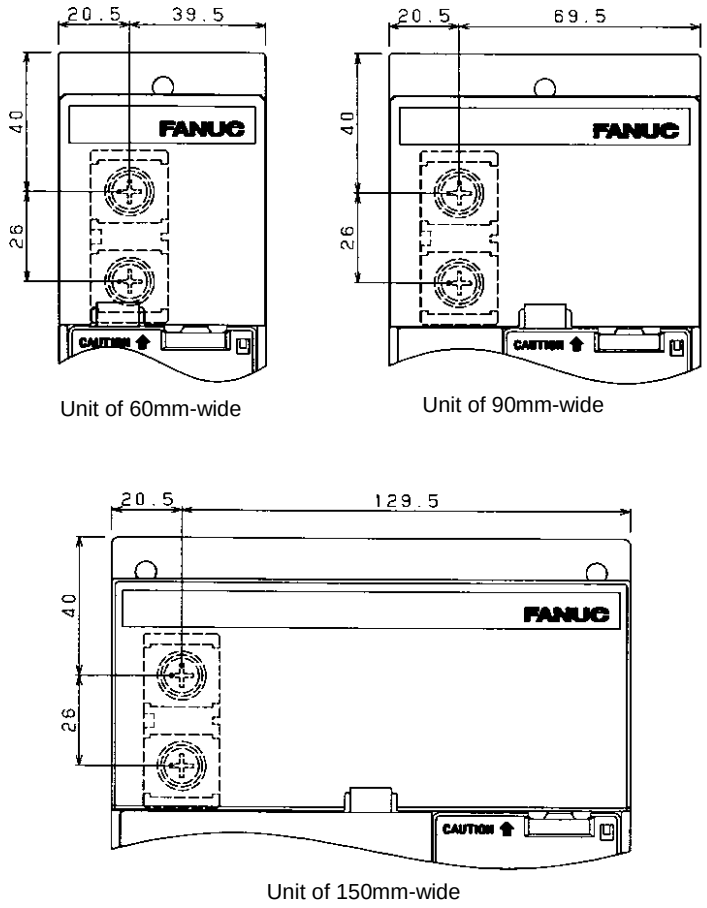

Fig.9.3.1.2(a) Location of Terminal Block TB1 on the units of 60-, 90-, and 150-mm-Wide amplifiers

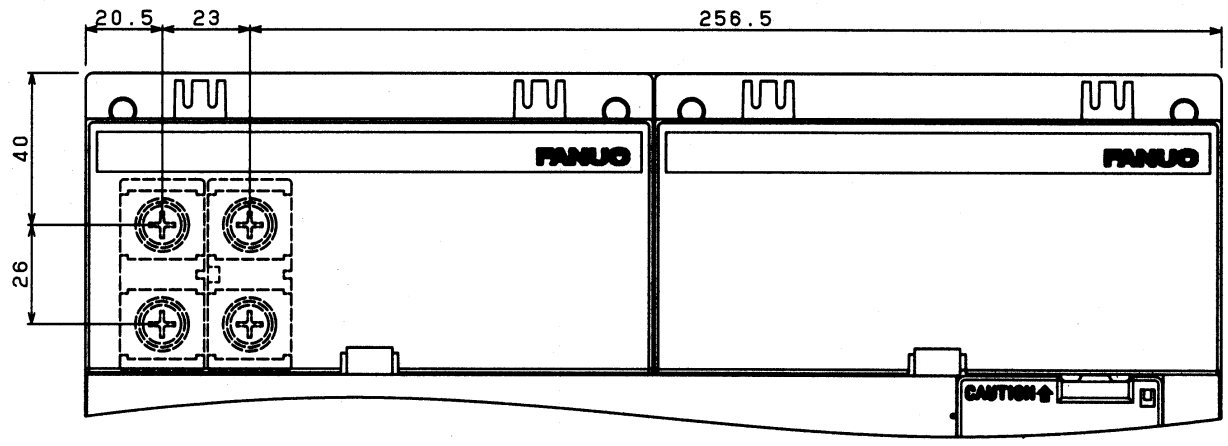

Fig.9.3.1.2(b) Location of Terminal Block TB1 on the units of 300-mm-Wide amplifiers

About the length of the DC link cable

Suppress the length of the DC link cable to within 1.5 m. (See the following diagram.)

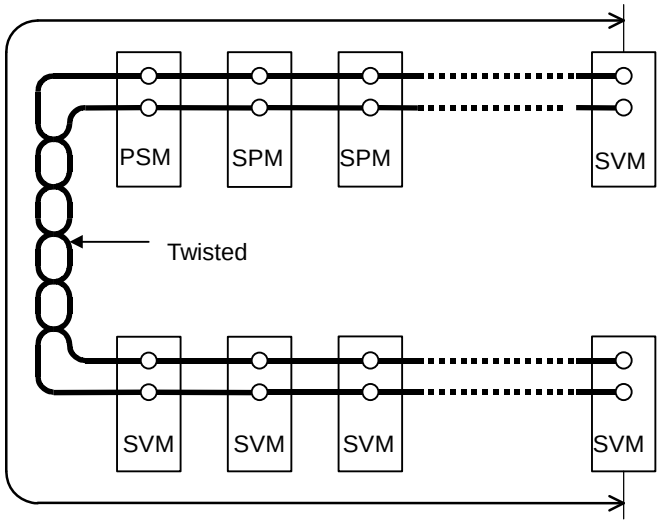

9.3.1.3 Details of cable K3

Cable K3 is used to supply control power to the αi PS.

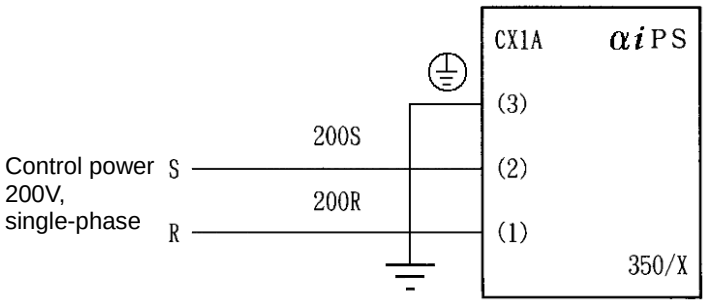

Cable specification:

Two-conductor polyvinyl heavy-duty power cable (JIS C3312), conductor size of 1.25 mm^2 (50/0.18),
PVC sheath 9.6 mm in diameter

Connector specification:

Tyco Electronics AMP connector with receptacle housing 1-178128-3 and receptacle contact 1-175218-2

NOTE

Always connect cable K3 to the CX1A. If it is connected to the CX1B, fuses inside the unit may blow.

9.3.1.4 Details of cable K69

The cable K69 is used between the *i* PS, α*i* SP, and α*i* SV.

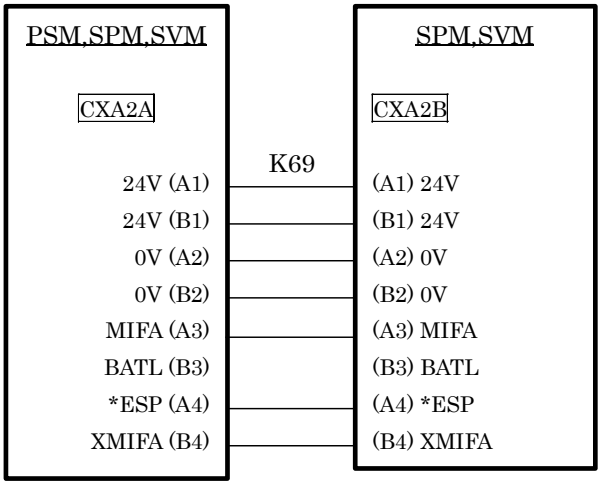

Connector specification

Manufacturer	Tyco Electronics AMP
Connector specification	D-2100 series Housing 1-1318119-4 (1 pieces) Contact 1318107-1 (8 pieces) [Ordering information : A06B-6110-K210 connector only]
Conductor size	0.5mm^2, AWG20
Instruction outer diameter	1.08-2.83 mm

NOTE
The (B3)BATL is the interface used to connect the batteries for the absolute Pulsecoder. For details, see the description of battery connection in Subsection 9.3.2.10.

⚠ WARNING
1 When using the built-in battery (A06B-6114-K504), never connect the BATL(B3) of the connector CXA2A/CXA2B.
Otherwise, a short-circuit will occur between the battery output voltages for different α*i* SVs, possibly resulting in the batteries becoming very hot, which is dangerous.
2 Do not connect more than one battery to the same BATL(B3) line. Otherwise, a short-circuit will occur between the output voltages of different batteries, possibly resulting in the batteries becoming very hot, which is dangerous.

9.3.1.5 Details of cable K6

Cable K6 is used to control the magnetic contactor if it is installed outside the unit.

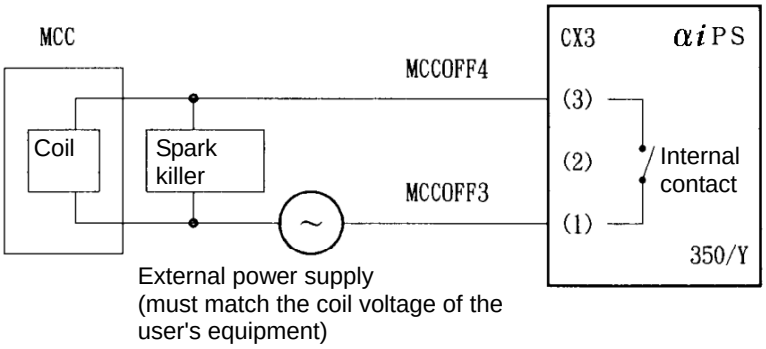

Cable specification:

Two-conductor polyvinyl heavy-duty power cable (JIS C3312), conductor size of 1.25 mm^2 (50/0.18), PVC sheath 9.6 mm in diameter

Connector specification:

Tyco Electronics AMP connector with receptacle housing 2-178128-3 and receptacle contact 1-175218-2

Internal-contact specification:

	Resistive load (cosϕ=1)	**Inductive load (cosϕ=0.4, L/R=7msec)**
Rated load	250VAC, 5A / 30VDC, 5A	250VAC, 2A / 30VDC, 2A
Maximum contact rating	5A	5A

NOTE

Always install a spark killer (CR) that matches the magnetic contactor to protect the internal contacts. The following table lists the recommended capacitances and resistances.

Coil voltage	**C**	**R**
24VDC	0.22μF	22Ω
100 to 230VAC	0.1μF	220Ω

9.3.1.6 Details of cable K7

Cable K7 is used to supply an emergency stop signal to the αi PS.

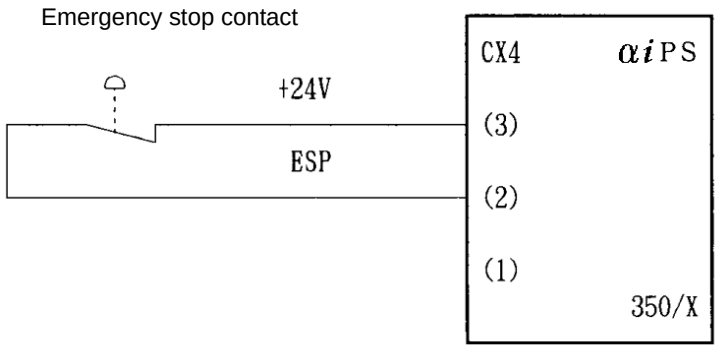

Cable specification:

Two-conductor polyvinyl heavy-duty power cable (JIS C3312), conductor size of 1.25 mm^2 (50/0.18), PVC sheath 9.6 mm in diameter

Connector specification:

Tyco Electronics AMP connector with receptacle housing 1-178128-3 and receptacle contact 1-175218-2

(1) When the contact is ON (closed), the spindle motor and servo motor are enabled.
When the contact is OFF (open), the external magnetic contactor (MCC) is in the off state, and the spindle motor and servo motor do not operate.

(2) When the contact is set to OFF (open) during motor rotation, the spindle motor decelerates, then stops, and the servo motor is stopped by the dynamic brake.

(3) The contact input signal is specified as follows:
<1> As the external contact capacity, a voltage of at least 30 VDC and a current of at least 100 mA are required.
<2> Significant levels (with the voltage between input pins) when the contactless signal input mode is used:
Low level "logic 0": Up to 2 V
High level "logic 1": At least 20 V

(4) When the αi PS main power is turned off for safety in such a case that the machine protection door is open, the contact of the ESP signal (CX4), which is input to the αi PS, must be set to OFF (open) within 200 ms after turn-off of the αi PS main power.
When the contact of the ESP signal (CX4) remains ON (closed) after the αi PS main power is turned off, a DC link low-voltage alarm (alarm No. 4) occurs in the PSM.

⚠ WARNING

1 The spindle free-runs as a result of a power failure, an alarm, or a command from the ladder (MPOFA signal). During free running, the spindle does not stop even when an emergency stop is applied.
2 Note that even when the power is off, the spindle might be free-running.
3 When an amplifier requires an external dynamic brake module, but no dynamic brake module is connected to the amplifier, applying an emergency stop causes the servo axis to coast.
4 The ESP signal receive circuit of the amplifier is implemented by an electronic circuit. This means that input of the ESP signal to the amplifier due to an electronic circuit failure may not stop the motor.

9.3.1.7 Details of cable K70

(a) The cable K70 is used to connect the connector CX1A on the αi PS to the frame ground of the cabinet.
Conductor size : 1.25 mm^2

(b) See Table 4.3.1.7, and determine the cable to be used for connecting the metal frames of the αi PS, αi SP, αi SV, and dynamic brake module (DBM) to the frame ground of the cabinet.

Table 4.3.1.7 Grounding cable conductor diameter

Motor power cable cross-section S (mm^2)	Grounding cable cross-section (mm^2)
S ≤ 5.5	5.5 or greater
5.5 < S ≤ 16	S or greater
16 < S ≤ 35	16 or greater
35 < S	S/2 or greater

NOTE
The following M5 crimp terminal can be used with a cable having a large conductor diameter.
Nichifu Co., Ltd. CB22-5S
Overall conductor size range : 16.78 to 22.66 mm^2

Based on the tables below, select a crimp terminal used for connection to the αi PS.

200-V system

Amplifier model	Terminal screw	Tightening torque
αi PS 5.5, αi PS 11, αi PS 15, αi PS 26, αi PS 30, αi PS 37	M5	2 to 2.5Nm
αi PS 55	M6	3.5 to 4.5Nm

400-V system

Amplifier model	Terminal screw	Tightening torque
αi PS 11HV , αi PS 18HV, αi PS 30HV, αi PS 45HV	M5	2 to 2.5Nm
αi PS 75HV, αi PS 100HV	M6	3.5 to 4.5Nm

9.3.1.8 Detailed description of the connection of cables K41 (for regenerative discharge resistance), K42 (for thermostat), and K43 (for fan motor)

Connection for A06B-6089-H510 and A06B-6089-H500

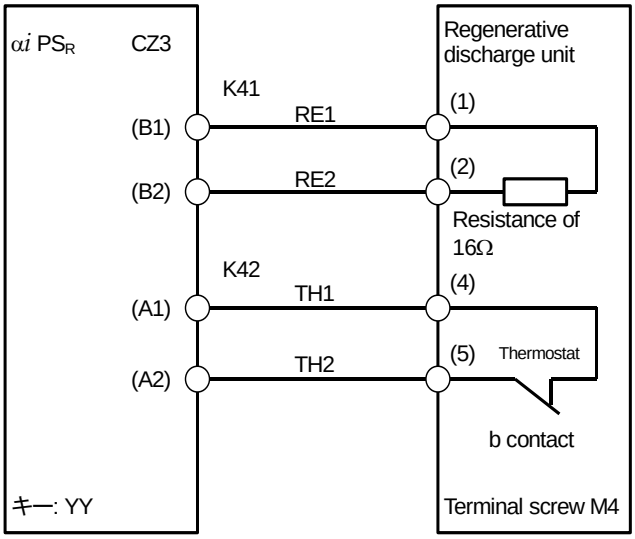

Tyco Electronics AMP D-5000

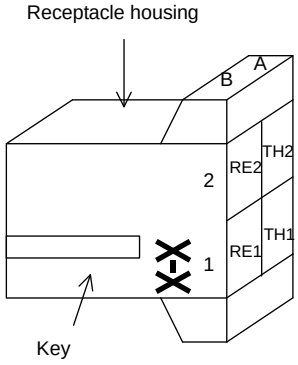

Cable number	Applicable cable VCT(heat resistant 60°C (Note 1)	Connector key (Note 2)	Applicable contact (Note 2)
K41	2mm^2 Two-conductor polyvinyl heavy-duty power cable (JIS C3312)	YY 2-917807-2	S size 316040-6
K42	1.25mm^2 Two-conductor polyvinyl heavy-duty power cable (JIS C3312)		S size 316040-6

NOTE
1 Run cables K41 and K42 without tying them in a bundle.
2 CZ1 near them is for the power supply. Be careful of the connector key.

Connection for A06B-6089-H711 to -H713

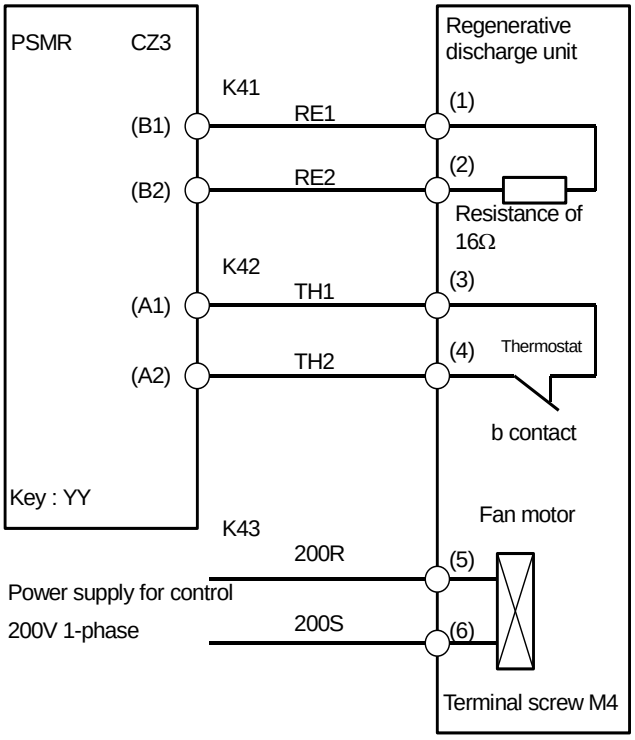

Cable number	Applicable cable VCT(heat resistant 60°C (Note 1)	Connector key (Note 2)	Applicable contact (Note 2)
K41	2mm^2 Two-conductor polyvinyl heavy-duty power cable (JIS C3312)	YY 2-917807-2	S size 316040-6
K42	1.25mm^2 Two-conductor polyvinyl heavy-duty power cable (JIS C3312)		S size 316040-6
K43	2mm^2 Two-conductor polyvinyl heavy-duty power cable (JIS C3312)		

NOTE
1 Run cables K41, K42, and K43 without tying them in a bundle.
2 CZ1 near them is for the power supply. Be careful of the connector key.

9.3.1.9 Details of cable K100 (for power failure detection output)

Cable K100 is used for the function for preventing the vertical axis from falling at the time of power failure. For details, see Appendix I, "POWER FAILURE DETECTION FUNCTION".

NOTE
A06B-6110-Hxxx and A06B-6120-Hxxx do not have an output for the K100.

9.3.2 αi SV series Connection Diagram

60mm- or 90mm-wide αi SV (example : αi SV 2-axis) Without connection to dynamic brake module

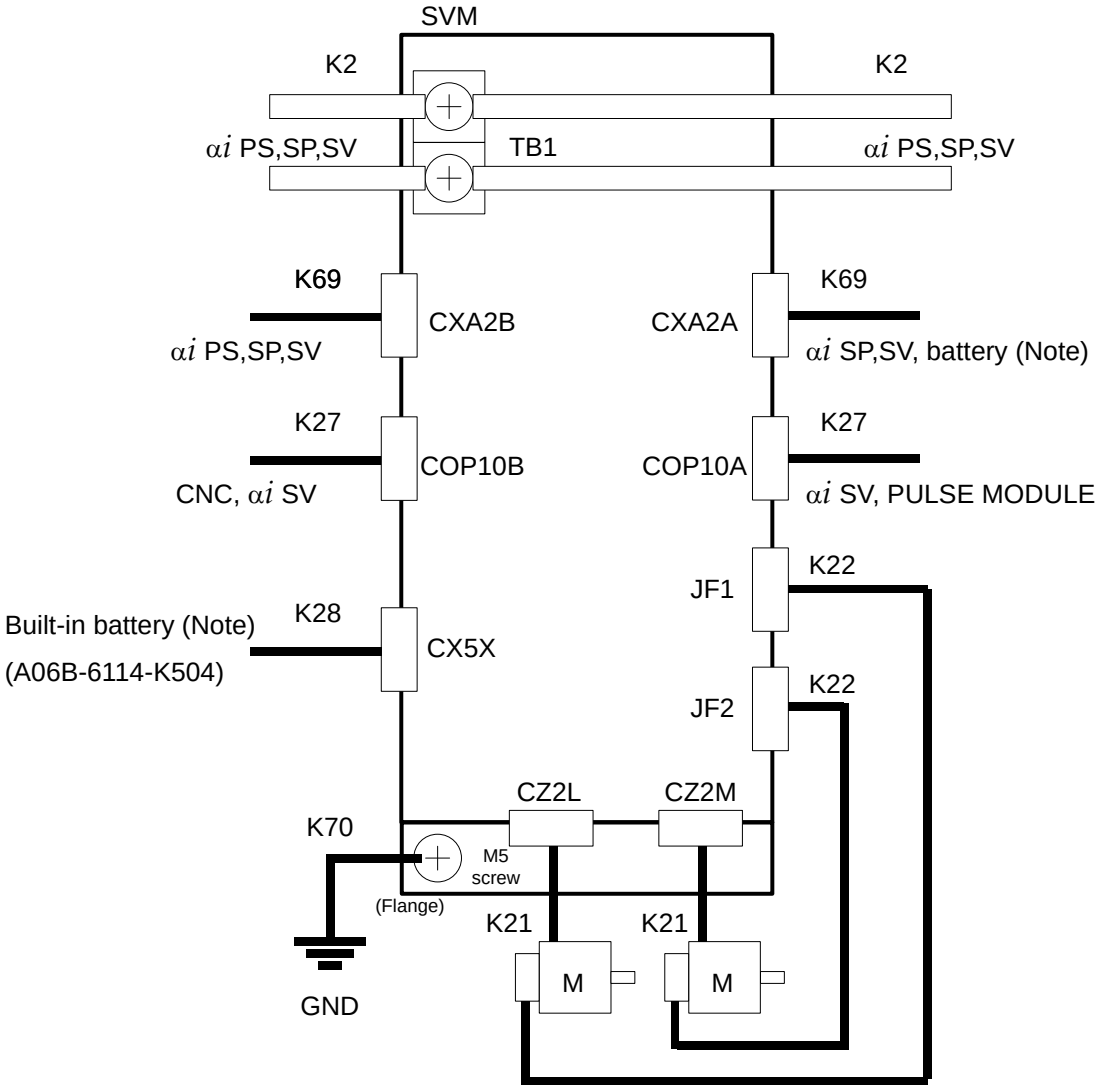

NOTE
See Subsection 9.3.2.10 for connection to the battery or built-in battery.

αi SV 360, αi SV 180HV, αi SV 360HV

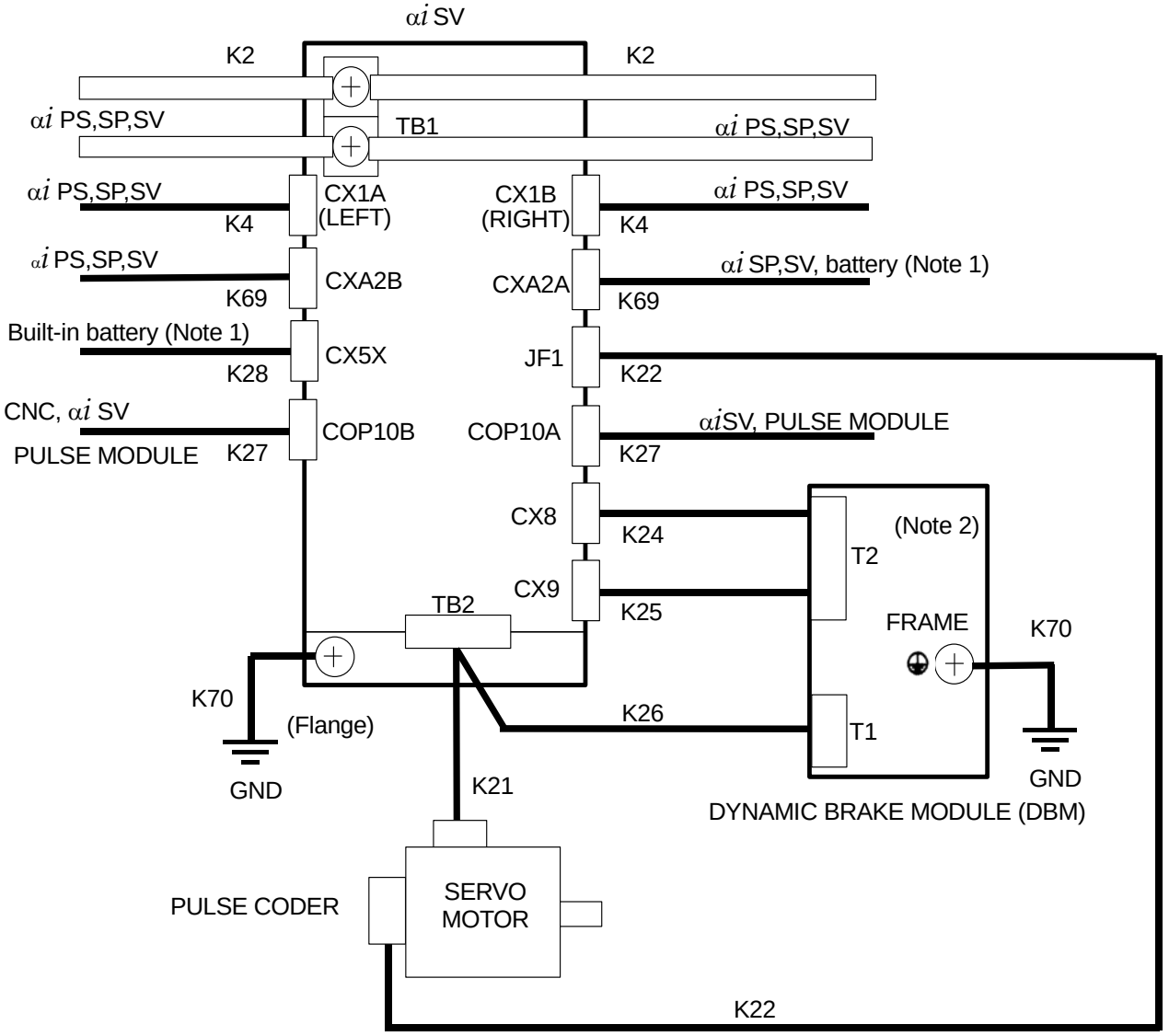

NOTE
1 See Subsection 9.3.2.10 for connection to the battery or built-in battery.
2 Connect one dynamic brake module for each servo amplifier.

αi SV 360, αi SV 180HV, αi SV 360HV
When a servo motor with two windings is driven by two amplifiers

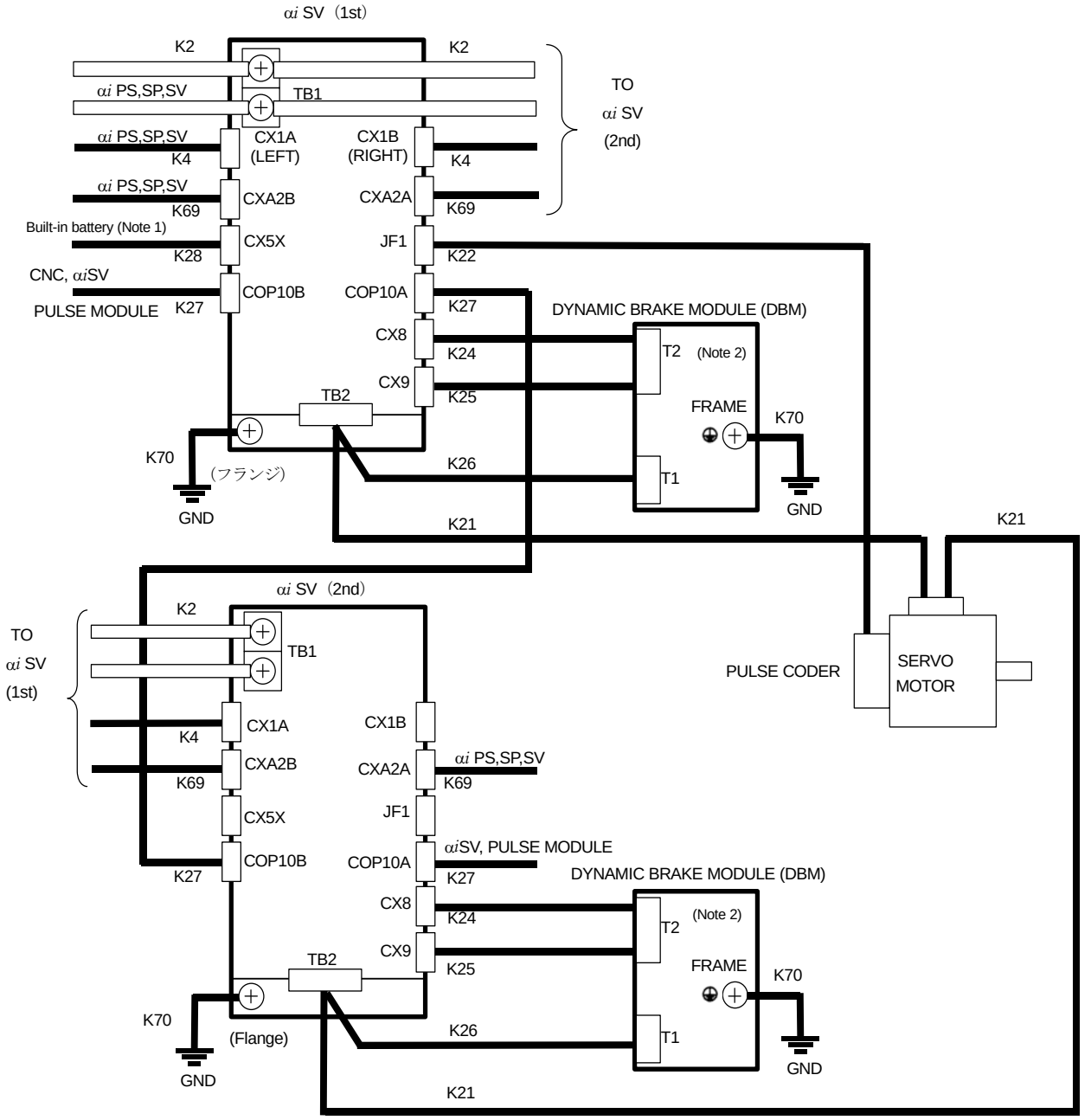

NOTE
1 See Subsection 9.3.2.10 for connection to the battery or built-in battery.
2 Connect one dynamic brake module for each servo amplifier.

9.3.2.1 Details of cable K2

The cable K2 is used to connect the DC link.
See Item 9.3.1.2.

9.3.2.2 Details of cable K4

Cable K4 is a connection cable used to supply power (single phase, 200 VAC) for driving the dynamic brake unit to the αi SV.

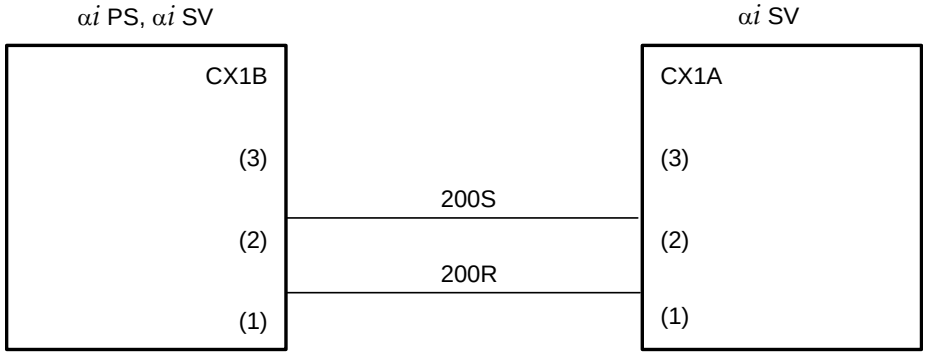

Example cable :
Two-conductor polyvinyl heavy-duty power cable (JIS C3312)
Conductor size of : 1.25mm^2 (50/0.18)
PVC sheath 9.6 mm in diameter
Connector specification:
Tyco Electronics AMP connector with receptacle housing 1-178128-3 and receptacle contact 1-175218-2

9.3.2.3 Details of cable K69

The cable K69 is a communication cable used between modules.
See Item 9.3.1.4.

9.3.2.4 Details of cable K21

The cable K21 is a power cable used between the αi SV and motor. The cable is attached to the αi SV through the connector D-5000 excluding αi SV 160L, αi SV 360, αi SV 180HVL, αi SV 180HV and αi SV 360HV

Connection by connector

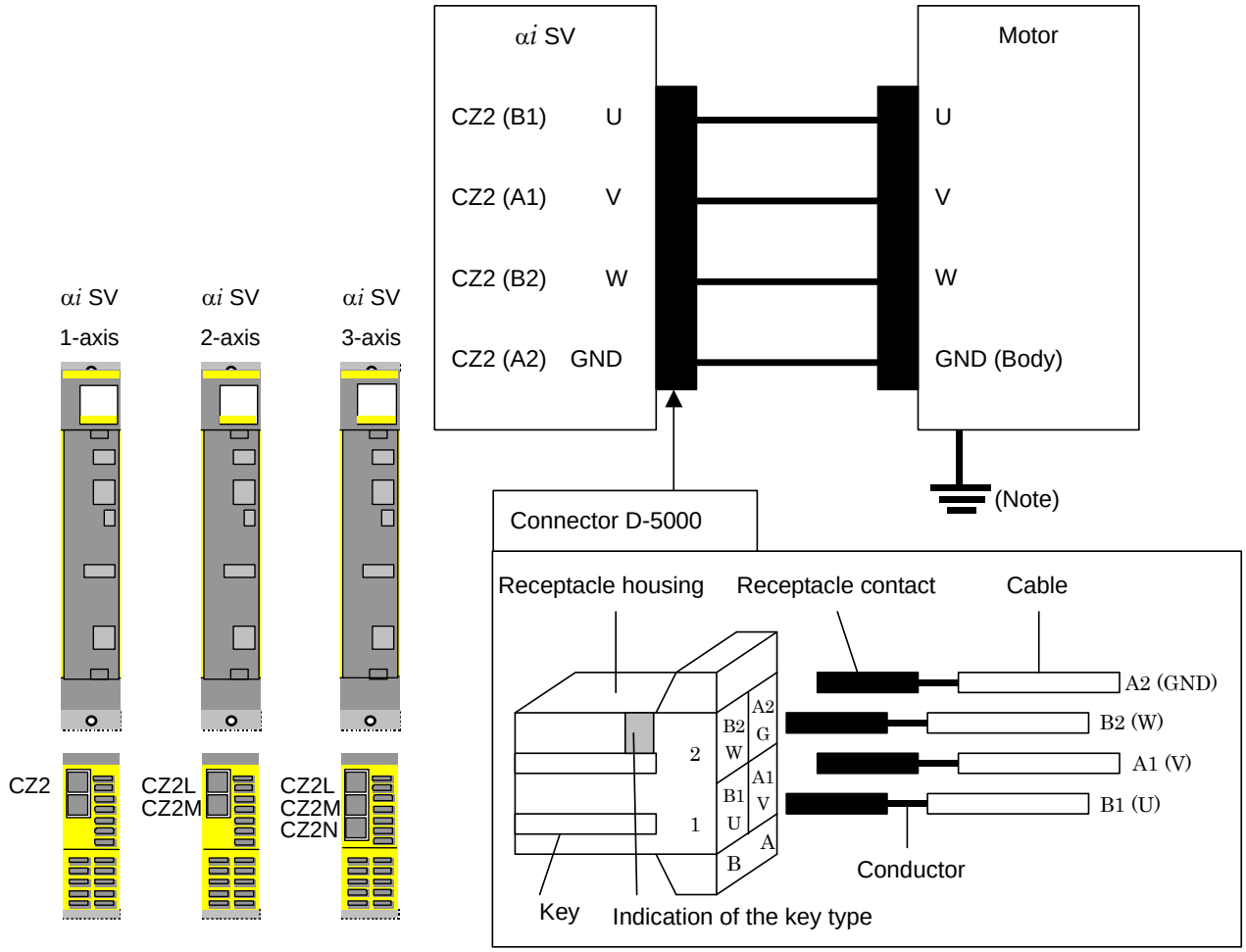

NOTE

When the αi SV 400-V input seies is used, always mount the motor flange on a cabinet (machine) connected to the system ground. It may be difficult to connect the motor flange to a cabinet (machine) connected to the system ground. In this case, connect the motor flange and frame ground (ground plate of the cabinet) using a cable at least 1.25 mm^2 thick. The cable must be separated from the power lines as much as possible.

> ⚠ **WARNING**
> 1 If the phase order of the power lines is incorrect, an unpredictable motor operation may occur.
> 2 If the power lines are connected to wrong axes (L/M/N), an unpredictable motor operation may occur.

About the receptacle housing of the αi SV-side connector

The αi SV-side connector is a key type. The key is intended to prevent incorrect connection between the axes of multi-axis amplifiers (αi SV2, αi SV3). Select the receptacle housing that matches the αi SV and its axis that are to be used.
See Subsection 9.4.2 for detailed explanations about the specification of the D-5000.

Specification of the key	Applicable SVM
XX	αi SV1, αi SV2(L), αi SV3(L)
XY	αi SV2(M), αi SV3(M)
YY	αi SV3(N)

About the receptacle contact of the αi SV-side connector

Four types receptacle contacts are prepared for the different line diameter of the cable. Please use the receptacle contact which suits the line diameter of the cable.
See Subsection 9.4.2 for detailed explanations about the specification of the D-5000.

Connection by terminal block

αi SV 160L, αi SV 180HVL

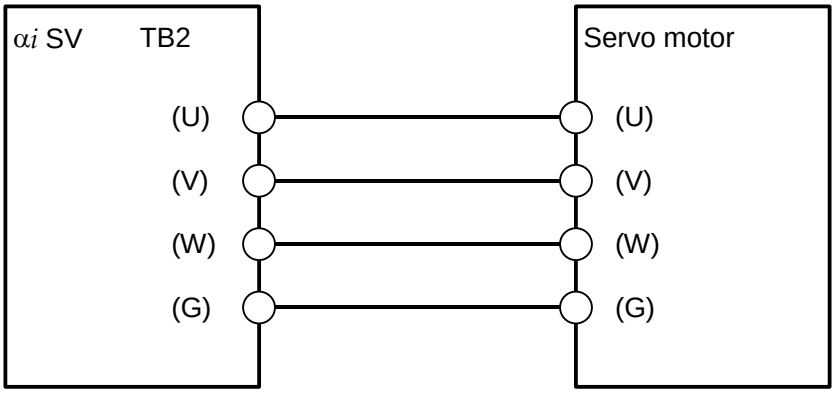

- 200-V input series

Cables should be connected to the αi SV using crimp terminals as listed in the following table.

Amplifier models	Terminal screw	Rigid torque
αi SV 160L	M4	1.1 to 1.5Nm

- 400-V input series

Cables should be connected to the αi SV using crimp terminals as listed in the following table.

Amplifier models	Terminal screw	Rigid torque
αi SV 180HVL	M4	1.1 to 1.5Nm

About the cable specification

Select the cable specification by considering the following conditions for use.

<1> Motor current rating or current needed in use on a real machine
<2> Cable type (heat resistance temperature, etc.)
<3> Environment in which the cable is installed (operating ambient temperature, etc.)
<4> Need of water proofing (pay attention to the diameter of the applicable cable clamp)
<5> Certification for CE marking (compliance with various safety standards and EMC standard)
<6> Securing insulation space among the cable pins at the time of cabling

About the motor-side connector

The specification of the motor-side connector varies from one motor model to another.

Refer to "FANUC AC SERVO MOTOR αi series Descriptions (B-65262EN)" for explanations about the specification of the motor-side connector.

αi SV 360, αi SV 180HV, αi SV 360HV

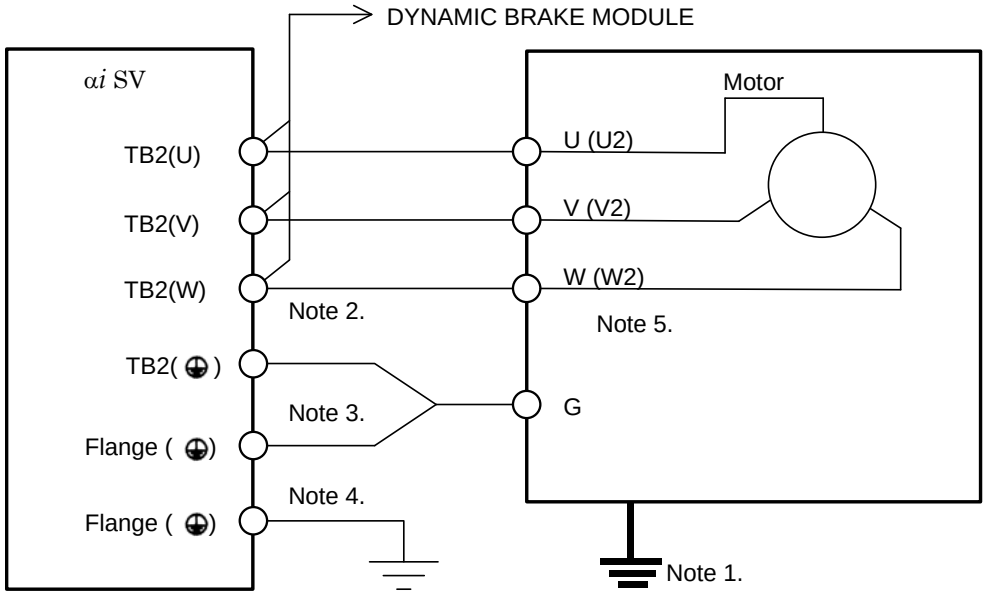

NOTE

1 When the αi SV 400-V input series is used, always mount the motor flange on a cabinet (machine) connected to the system ground. It may be difficult to connect the motor flange to a cabinet (machine) connected to the system ground. In this case, connect the motor flange and frame ground (ground plate of the cabinet) using a cable at least 1.25 mm^2 thick. The cable must be separated from the power lines as much as possible.

2 Size of screw for motor power line TB2(U), TB2(V), and TB2(W)
- For αi SV 360, αi SV 180HV : M6
- For αi SV 360HV : M10

3 Connection for motor ground lead
- For αi SV 360, αi SV 180HV:
  Connection to TB2(G) (M6)
- For αi SV 360HV : Connection to flange (M6)

4 Size of screws for connection between flange and ground
- For αi SV 360, αi SV 180HV : M5
- For αi SV 360HV : M6

5 To drive a motor with multiple windings by using two αi SV amplifiers, connect motor power lines (U, V, W, and G) to the first αi SV amplifier, and connect motor power lines (U2, V2, W2, and G) to the second αi SV amplifier.

9.3.2.5 Details of cable K22

The cable K22 is used to connect the αi SV and Pulsecoder.

> **⚠ WARNING**
> If the connector (JF1, 2, or 3) of the pulsecoder is connected incorrectly, an unpredictable motor operation may occur.

For servo motor αiF, αiS series and Servo motor βiS series (βiS 0.4/5000 to βiS 22/2000)

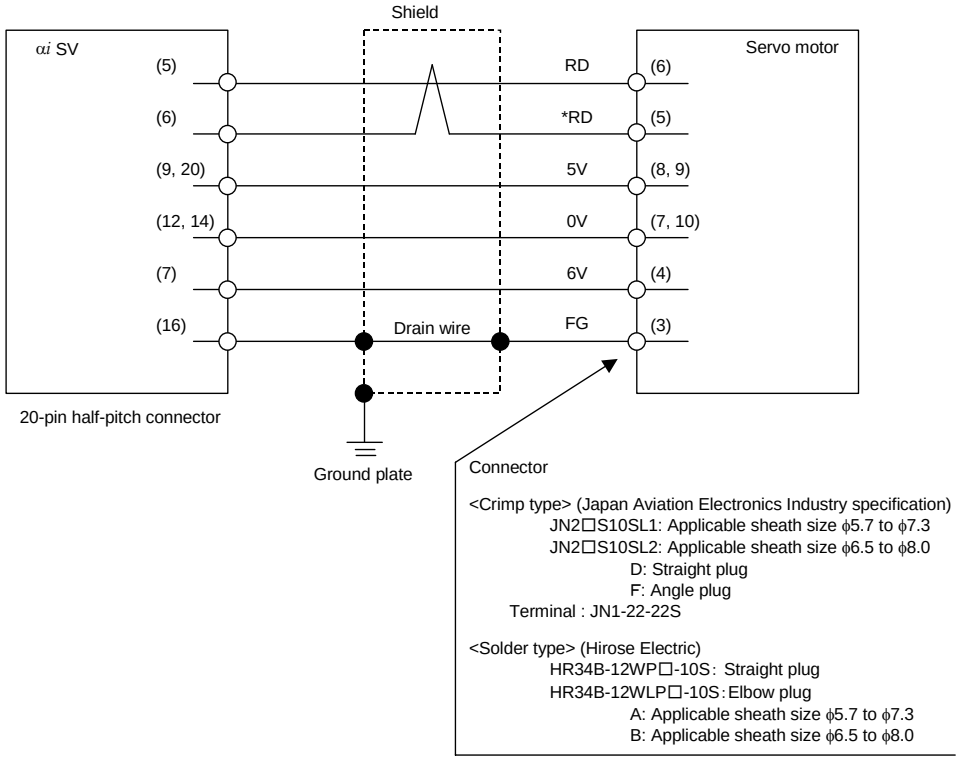

Using cable conductor

Signal name	Cable length : 28m or less	Cable length : 50m or less
5V, 0V, 6V	0.3mm^2 × 5 (Note 4) Strand configuration 12/0.18 or 60/0.08 Insulation outer diameter ϕ0.8 to ϕ1.5	0.5mm^2 × 5 (Note 4) Strand configuration 20/0.18 or 104/0.08 Insulation outer diameter ϕ0.8 to ϕ1.5
RD, *RD	0.18mm^2 or more Twisted-pair wire Insulation outer diameter ϕ0.8 to ϕ1.5	0.18mm^2 or more Twisted-pair wire Insulation outer diameter ϕ0.8 to ϕ1.5
Drain wire	0.15mm^2 or more	0.15mm^2 or more

See Subsection 9.4.1 for explanations for αi SV connector that matches the recommended cable.
See Appendix B, "About Cable Conductors," for detailed explanations about the cable.

NOTE

1 The ground plate to which the shield is connected must be placed as close as possible to the servo amplifier so that distance between the ground plate and the servo amplifier becomes shortest.

2 In case that the cable is prepared by MTB, total resistance of 5V and 0V must be less than 2Ω.

3 Pulsecoder side connector can accept maximum 0.5mm^2 (wire construction 20/0.18 or 104/0.08, diameter φ1.5 or less) wire and sheath diameter is φ5.7 to φ8.0. In case of using thicker wire or cable, take measures described below.

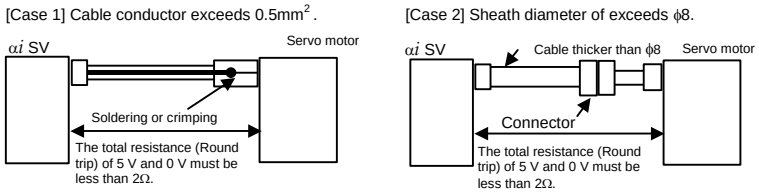

4 In case of incremental Pulsecoder, 6V is not necessary to be connected.

- Crimp tool specification

FANUC specification	Japan Aviation Electronics Industry specification	Applicable cable thickness
A06B-6114-K201/JN1E	CT150-2-JN1-E	21AWG(0.5mm^2:20/0.18) 23AWG(0.3mm^2) 25AWG(0.18mm^2)
A06B-6114-K201/JN1D	CT150-2-JN1-D	20AWG(0.5mm^2:104/0.08) 21AWG(0.5mm^2:20/0.18) 25AWG(0.18mm^2)

- Recommended cable

Recommended cable specification	Description	Crimp tool specification
A66L-0001-0460	Flexible cable 28 m or less	A06B-6114-K201/JN1E (FANUC specification) CT150-2-JN1-E (Japan Aviation Electronics Industry specification)
A66L-0001-0481	Fixed cable 28 m or less	
A66L-0001-0462	Flexible cable 50 m or less	A06B-6114-K201/JN1D (FANUC specification) CT150-2-JN1-D (Japan Aviation Electronics Industry specification)
A66L-0001-0491	Fixed cable 50 m or less	

- Connector kit specification

<Crimp type>

A06B-6114-K204/S : Straight plug (including a contact)

A06B-6114-K204/E : Elbow plug (including a contact)

<Solder type>

A06B-6114-K205/S : Straight plug

A06B-6114-K205/E : Elbow plug

For servo motor βiS series (β0.2/5000iS, β0.3/5000iS)

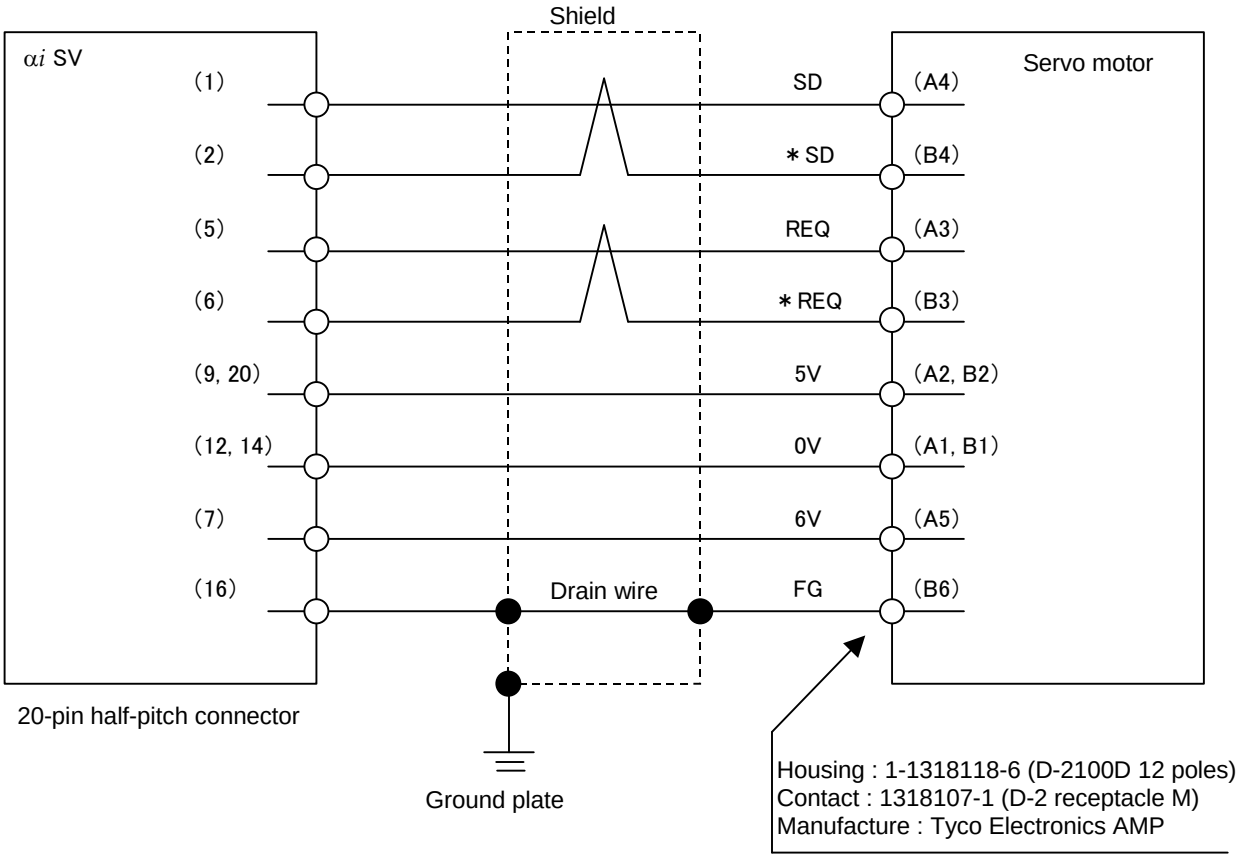

Using cable conductor

Signal name	Cable length : 20m or less
5V, 0V,6V	0.5mm^2 (AWG21) × 5 (Note 4) Strand configuration: 20/0.18 Insulation outer diameter: ϕ0.88 to ϕ1.5
SD, *SD, REQ, *REQ	0.18mm^2 (AWG25) or more Twisted-pair wire Strand configuration: 7/0.18 Insulation outer diameter: ϕ0.88 to ϕ1.5
Drain wire	0.15mm^2 or more
Recommended wire	0.5mm^2 × 5 + 0.18mm^2 × two-pair (For a fixed cable) Hitachi Cable, Ltd. : UL20276-SB(0)5 × 21AWG+2Px25AWG (For a movable cable) Hitachi Cable, Ltd. : UL20276-SB(FLEX)5 × 20AWG+2P × 25AWG

See Subsection 9.4.1 for explanations about the αi SV-side connector that matches the recommended cable.

NOTE

1 The ground plate to which the shield is connected must be placed as close as possible to the servo amplifier so that distance between the ground plate and the servo amplifier becomes shortest.

2 In case that the cable is prepared by the user, the total resistance (round trip) of 5 V and 0 V must be less than 0.8Ω.

3 The maximum applicable wire diameter of the cable connector on the motor side is 0.5 mm^2 (when crimping tool 1463475-1 is used) or 0.85 mm^2 (when crimping tool 1276654-1 is used).In case of using thicker wire or cable, take measures described below.

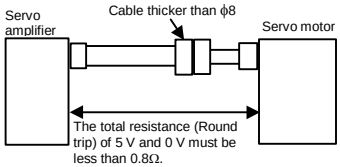

4 In case of incremental Pulsecoder, 6V is not necessary to be connected.

Absolute αiCZ sensor

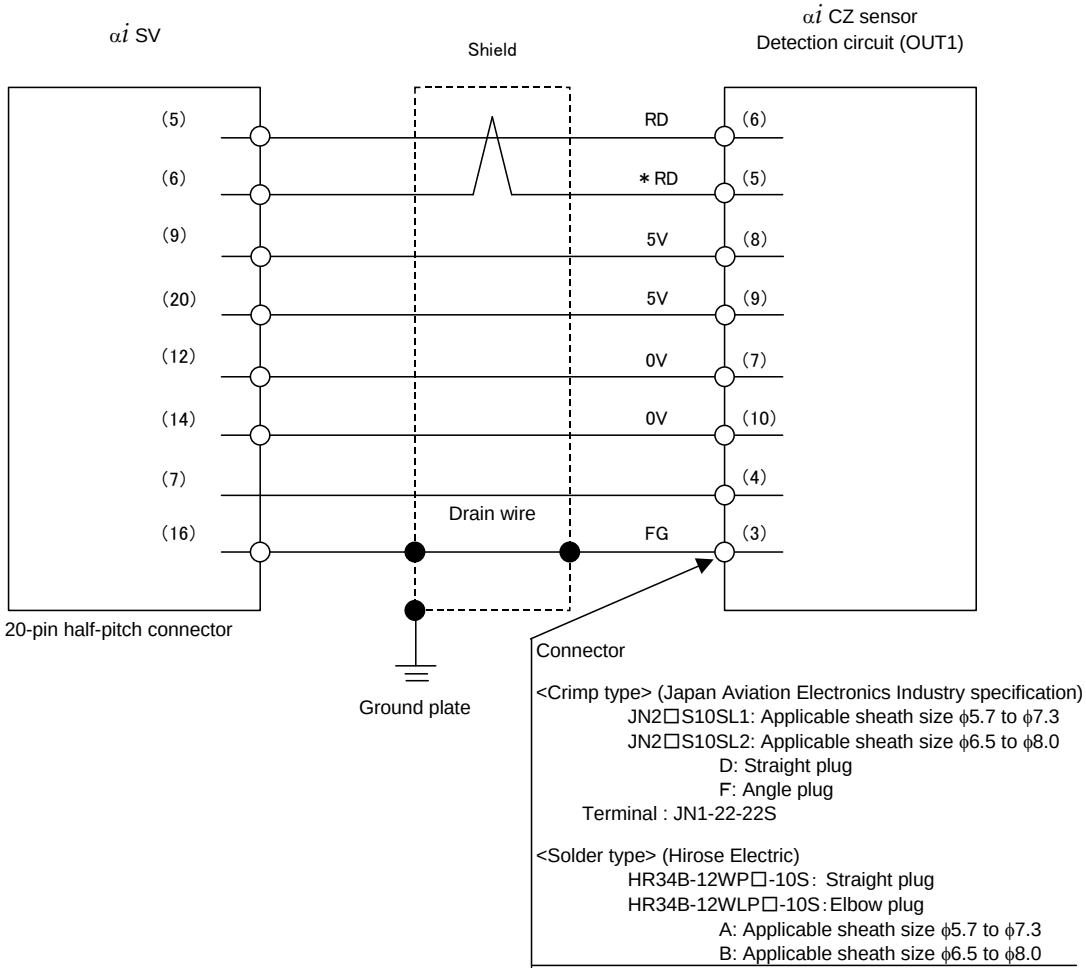

Using cable conductor

Signal name	Cable length : 28m or less	Cable length : 50m or less
5V, 0V, 6V	0.3mm^2 × 5 Strand configuration: 12/0.18 or 60/0.08 Insulation outer diameter: ϕ1.5 or less	0.5mm^2 × 5 Strand configuration: 20/0.18 or 104/0.08 Insulation outer diameter: ϕ1.5 or less
RD, *RD	0.18mm^2 or more Twisted-pair wire Insulation outer diameter: ϕ1.5 or less	0.18mm^2 or more Twisted-pair wire Insulation outer diameter: ϕ1.5 or less
Drain wire	0.15mm^2 or more	0.15mm^2 or more

NOTE
The ground plate to which the shield is connected should be placed near the servo amplifier to minimize the distance between the servo amplifier and ground plate.

9.3.2.6 Details of cable K24

(1) For A06B-6079-H401

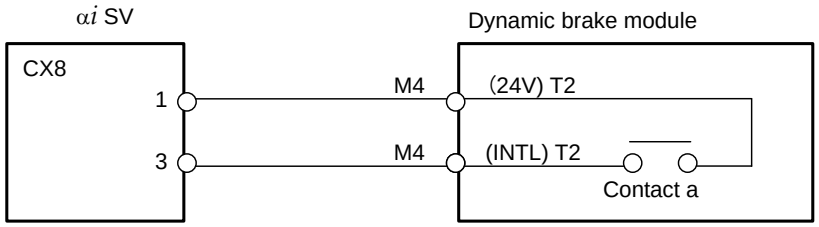

(2) For A06B-6069-H300

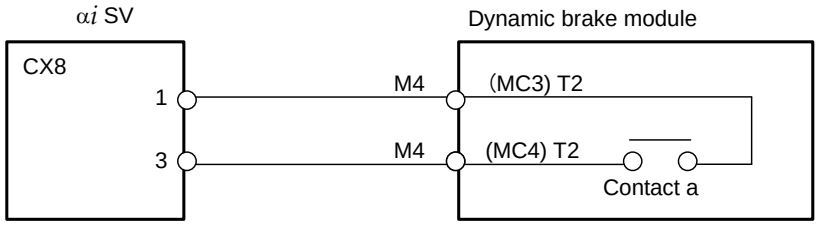

Example cable :

Two-conductor polyvinyl heavy-duty power cable (JIS C3312)
Conductor size of : 1.25mm^2 (50/0.18)
PVC sheath 9.6 mm in diameter

Connector specification:

Tyco Electronics AMP connector with receptacle housing
2-178128-3 and receptacle contact 1-175218-2

Crimping terminal :

2-4

9.3.2.7 Details of cable K25

(1) For A06B-6079-H401

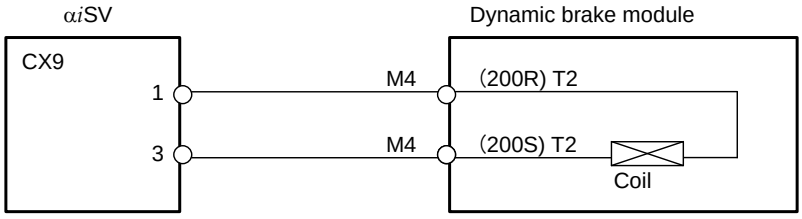

(2) For A06B-6069-H300

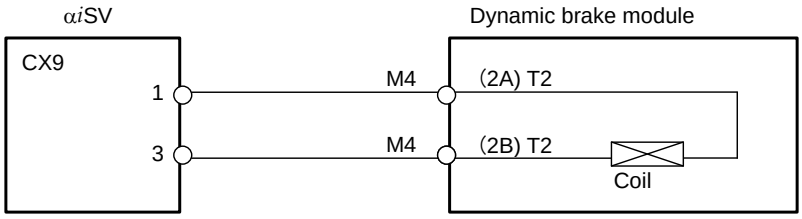

Example cable :

Two-conductor polyvinyl heavy-duty power cable (JIS C3312)
Conductor size of : 1.25mm^2 (50/0.18)
PVC sheath 9.6 mm in diameter

Connector specification:

Tyco Electronics AMP connector with receptacle housing
1-178128-3 and receptacle contact 1-175218-2

Crimping terminal :

2-4

9.3.2.8 Details of cable K26

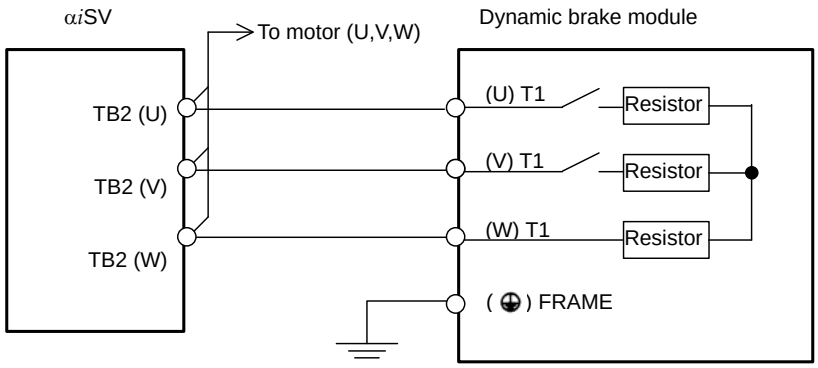

Example cable :

Fire-retardant polyflex wire (maximum conductor temperature 105°C) or equivalent to LMFC manufactured by The Furukawa Electric Co., Ltd., 5.5 mm^2 or larger

Connector specification:

Tyco Electronics AMP connector with receptacle housing 1-178128-3 and receptacle contact 1-175218-2

Crimping terminal :

DBM side	5.5-5 (A06B-6079-H401)
	5.5-8 (A06B-6069-H300)
α*i*SV side	5.5-6 (α*i* SV 360, α*i* SV 180HV)
	5.5-10 (α*i* SV 360HV)

9.3.2.9 Details of cable K27

Cable K27 is an optical fiber cable used in the FSSB interface.

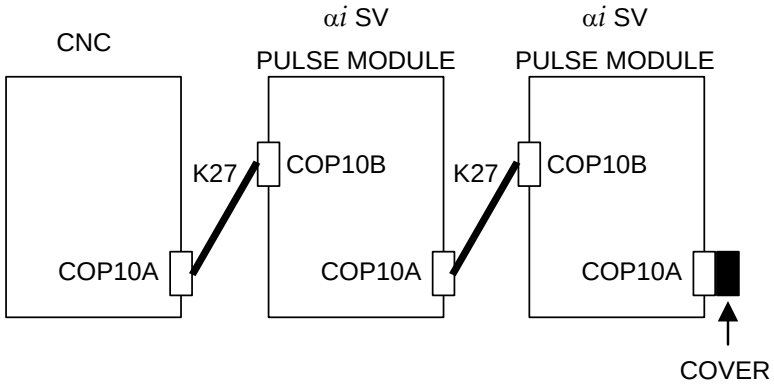

- The cable is run from connector COP10A in the CNC, αi SV, or pulse module to connector COP10B in the αi SV or pulse module.
- Connector COP10A of a module at the end of the cable chain must be covered with the cap supplied with the module.
- Refer to the applicable CNC connection manual for detailed specifications of the optical fiber cable.

9.3.2.10 Connecting the battery (for the absolute Pulsecoder)

The following two methods can be used to connect the batteries for the absolute Pulsecoder: [connection method 1] and [connection method 2]

NOTE
1 Since the battery is a part that is in need of periodic maintenance by nature, it is recommended to use [connection method 1]. In this case, commercial batteries (four R20 alkaline batteries), which are easy to purchase, can be used.
2 The built-in batteries used in [connection method 2] must be purchased directly from FANUC. It is recommended that spare built-in batteries is purchased.
3 Do not use both [connection method 1] and [connection method 2] at the same time. Otherwise, multiple batteries are connected to the same BATL(B3) line, and a short-circuit will occur between the output voltages of different batteries, possibly resulting in the batteries becoming very hot, which is dangerous.

[Connection method 1]

(1) Supplying power from one battery unit to more than one αiSV (1)

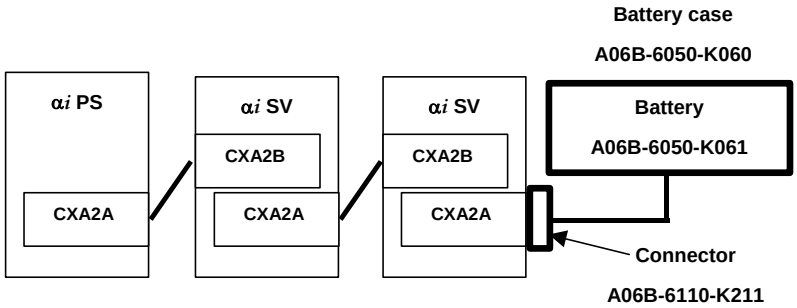

- A battery case (A06B-6050-K060) and four R20 alkaline batteries (A06B-6050-K061) are available as options. Commercial R20 alkaline batteries can also be used.

[Connection between the battery case and amplifier]

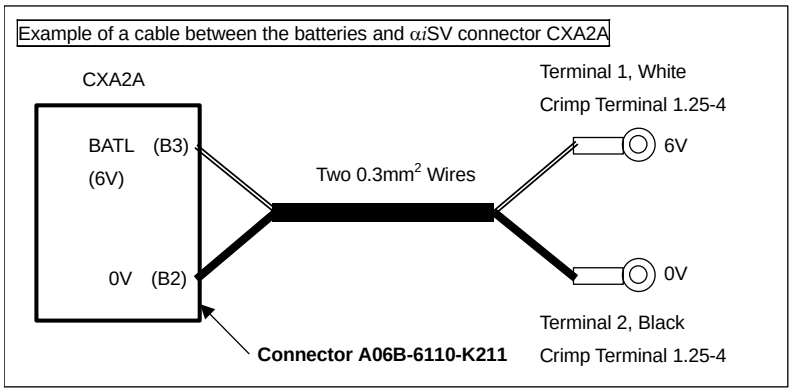

- A connector (A06B-6110-K211) for connecting batteries is available as an option.

[Connection between amplifiers]

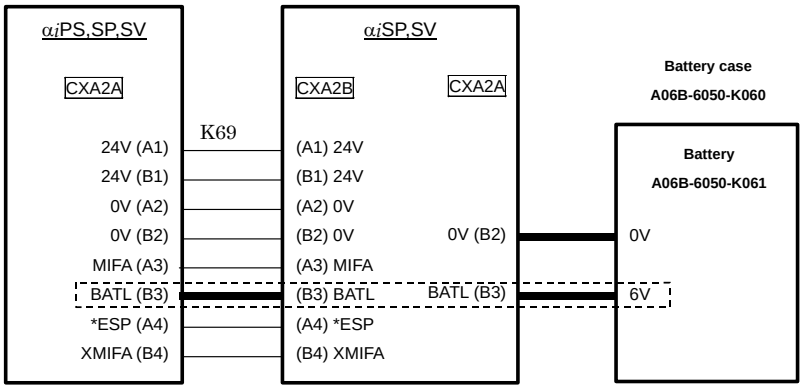

- The BATL(B3) is an interface for supplying power from one absolute Pulsecoder battery unit to more than one αi SV.

- Specification of the connector

Manufacturer	Tyco Electronics AMP
Connector specification	D-2100 series Housing 1-1318119-4 (2 pieces) Contact 1318107-1 (8 pieces) [Ordering information : A06B-6110-K210 connector only]
Conductor size	0.5mm^2, AWG20
Instruction outer diameter	1.08-2.83 mm

NOTE
1 Up to six servo motors can be connected to one battery.
2 The life of the batteries are about two years if they are used for six αi series servo motors and one year if they are used for six α series servo motors.

> ⚠ **WARNING**
> Do not connect more than one battery to the same BATL(B3) line.
> Otherwise, a short-circuit will occur between the output voltages of different batteries, possibly resulting in the batteries becoming very hot, which is dangerous.

(2) Supplying power from one battery unit to more than one αiSV (2)

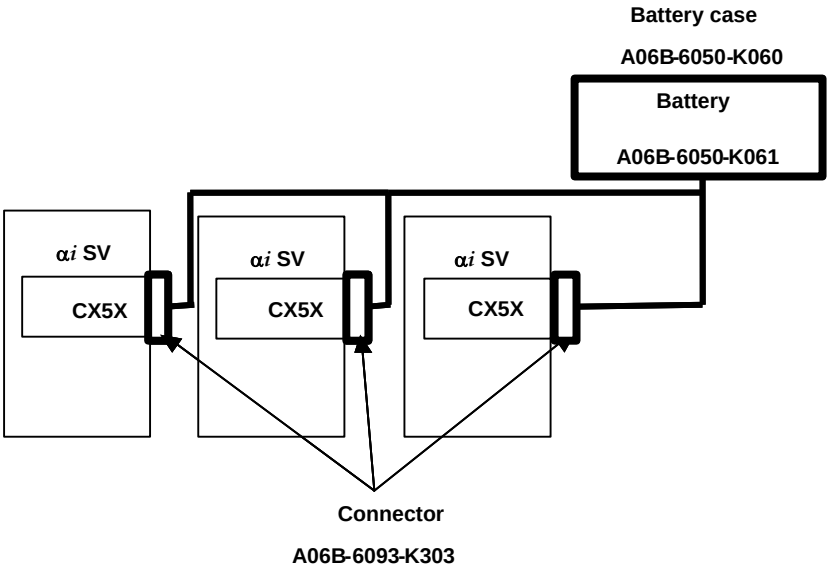

[Connection between the battery case and amplifier]

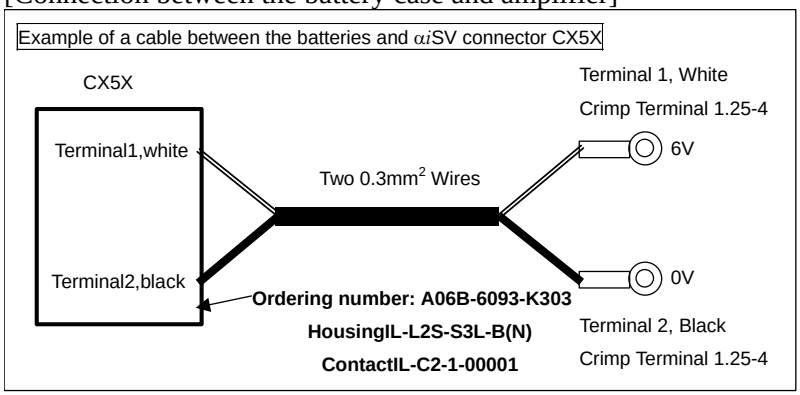

- Specification of the connector

Drawing No.	A06B-6093-K303
Manufacturer	Japan Aviation Electronics Industry
Manufacturer part number	Housing: IL-L2S-S3L-B(N), Quantity: 1 Contact: IL-C2-1-00001, Quantity: 2

To connect the contacts to the cable, a special crimping tool is required. Contact the manufacturer (Japan Aviation Electronics Industry Ltd.).

- A battery case (A06B-6050-K060) and four size-D alkaline dry cells (A06B-6050-K061) are available as options. Size-D alkaline dry cells are commercially available.

[Connection between amplifiers]

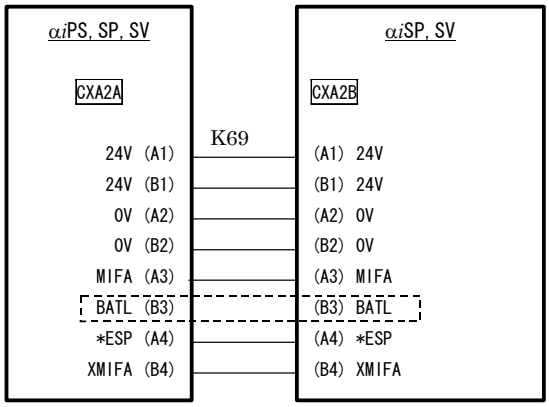

Leave BATL(B3) open.

NOTE
1 Up to six servo motors can be connected to one battery.
2 The battery service life is about two years for the αi series servo motor or about one year for the α series servo motor.

⚠ WARNING
Do not connect multiple batteries to the same BATL(B3) line. Otherwise, a short-circuit will occur between the output voltages of different batteries, possibly resulting in the batteries becoming very hot, which is dangerous.

[Connection method 2]

(1) Incorporating built-in batteries in each αi SV
(Models other than αi SV 360, αi SV 180HV, and αi SV 360HV)

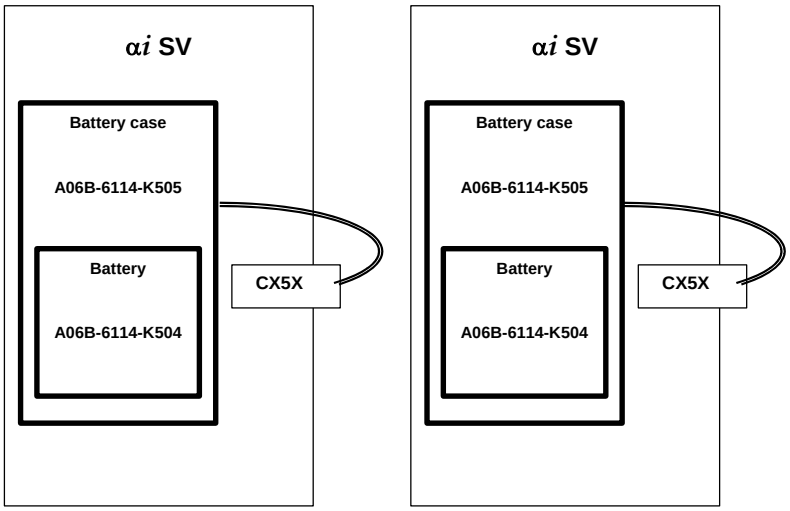

- Using the built-in battery (A06B-6114-K504) requires the battery case (A06B-6114-K505).
  A cover originally mounted at the αi SV battery location cannot be used with the battery.

⚠ WARNING

1 When using the built-in battery, never connect the BATL(B3) of the connector CXA2A/CXA2B. Otherwise, a short-circuit will occur between the output voltages of different αi SV batteries, possibly resulting in the batteries becoming very hot, which is dangerous.
2 Do not connect more than one battery to the same BATL(B3) line.
Otherwise, a short-circuit will occur between the output voltages of different batteries, possibly resulting in the batteries becoming very hot, which is dangerous.

- Incorporating built-in batteries in each αi SV
  For the αi SV 360, αi SV 180HV, and αi SV 360HV

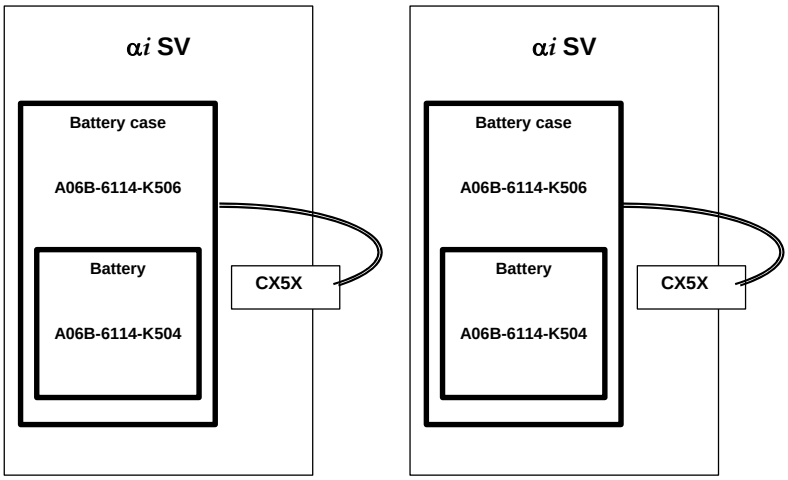

- Using the built-in battery (A06B-6114-K504) requires the battery case (A06B-6114-K505).

> ⚠ **WARNING**
> 1 When using the built-in battery, never connect the BATL(B3) of the connector CXA2A/CXA2B. Otherwise, a short-circuit will occur between the output voltages of different αi SV batteries, possibly resulting in the batteries becoming very hot, which is dangerous.
> 2 Do not connect more than one battery to the same BATL(B3) line.
> Otherwise, a short-circuit will occur between the output voltages of different batteries, possibly resulting in the batteries becoming very hot, which is dangerous.

Battery life

When the αi series servo motor is used, the batteries need to be replaced periodically as follows:

Battery ordering specification	Standard backup life	Remark
A06B-6050-K061	2 years/6 axes	Size D alkaline dry cell × 4
A06B-6114-K504	1 year/3 axes	Lithium battery

9.3.2.11 Details of cable K70

Connect the αi SV flange to the grounding plate through a grounding cable. (Protective ground connection)
See Subsection 9.3.1.7 for detailed descriptions about the K70.

9.3.3 αi SP Series Connection Diagram

Spindle amplifier module (αi SP series)

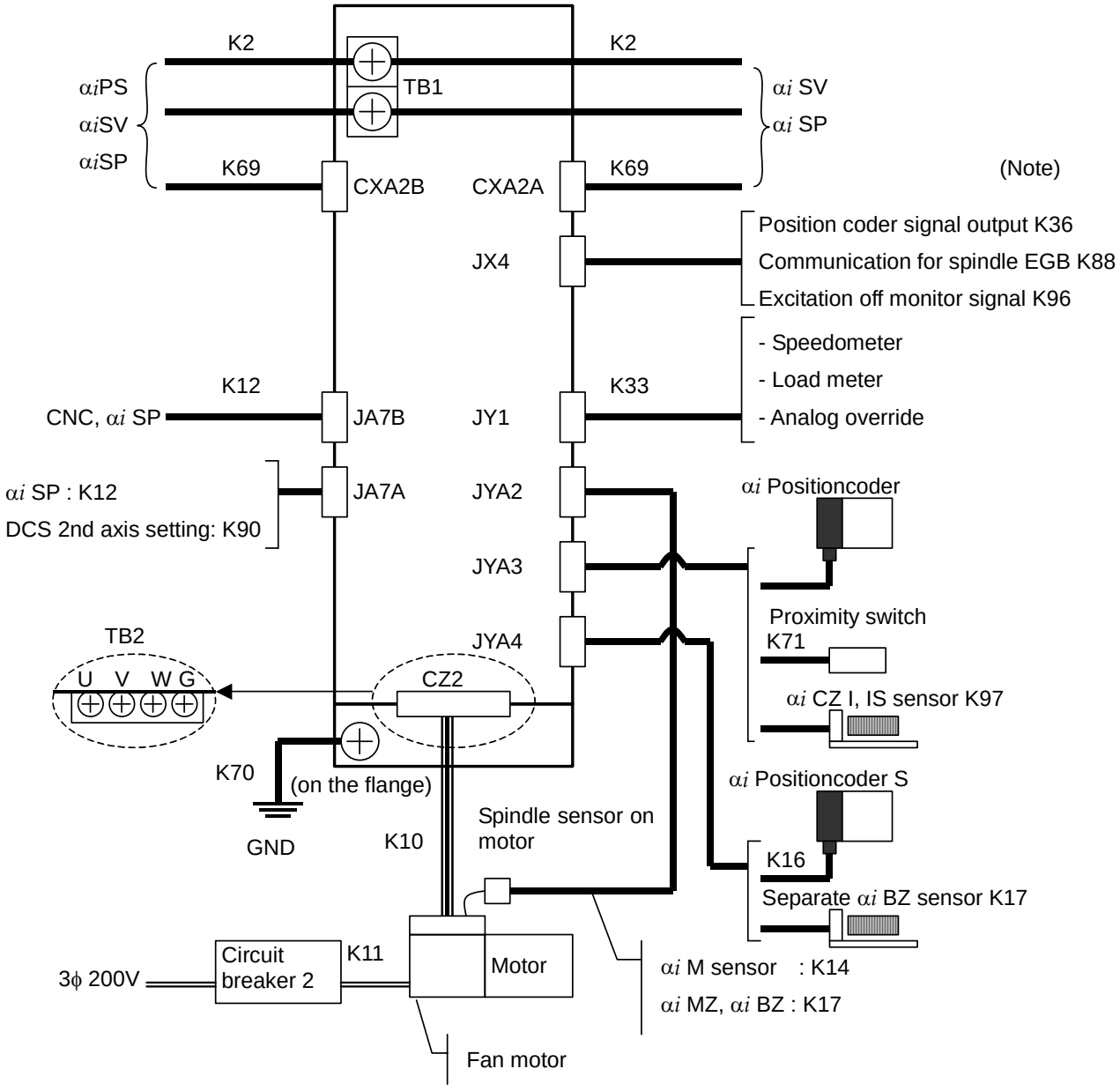

NOTE

This diagram applies to TYPE B. For TYPE A, neither the JYA4 function nor the JX4 function (except the excitation off monitor function) is provided.

The excitation off monitor signal is not used in A06B-6111, -6112, -6121, and -6122.

9.3.3.1 Details of cable K2

See Item 9.3.1.2.

9.3.3.2 Details of cable K69

See Item 9.3.1.4.

9.3.3.3 Details of cable K10 (power cable)

For the αi SP 2.2 and αi SP 5.5, a connector (D-5000) is used to attach the SPM motor power cable. For other models, a terminal block is used for connection.

This subsection does not include the dimensions of the crimp terminal or the shape of the motor-side connector.
Refer to "AC SPINDLE MOTOR αi series Descriptions (B-65272EN)" for these items.

About the cable specification

Select the cable specification by considering the following conditions for use.

<1> Motor current rating or current needed in use on a real machine
<2> Cable type (heat resistance temperature, etc.)
<3> Environment in which the cable is installed (operating ambient temperature, etc.)
<4> Need of water proofing (pay attention to the diameter of the applicable cable clamp)
<5> Certification for CE marking (compliance with various safety standards and EMC standard)
<6> Securing insulation space among the cable pins at the time of cabling

> ⚠ **CAUTION**
> If the phase order of the power lines is incorrect, an unpredictable motor operation may occur.

Connection through a connector

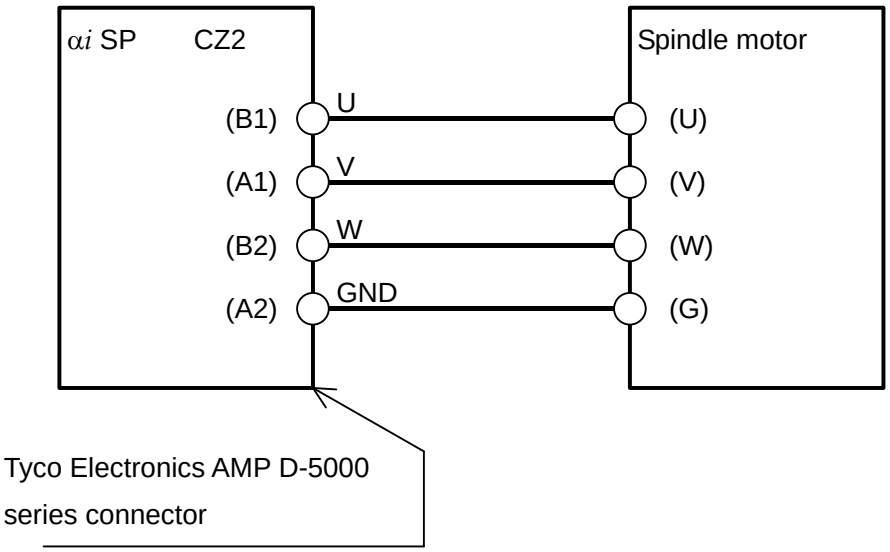

Location of connector pins

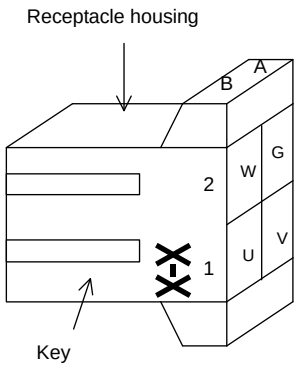

- 200-V input series

Key specification	Applicable models
XX	αi SP 2.2, αi SP 5.5 αi SP 5.5HV

See Subsection 9.4.2 for details.

Connection through a terminal block

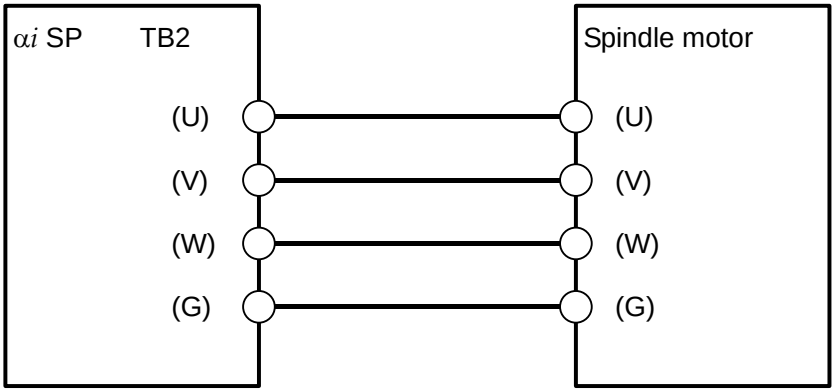

- 200-V input series

Cables should be connected to the αi SP using crimp terminals as listed in the following table.

Amplifier models	Terminal screw	Rigid torque
αi SP 11, αi SP 15	M4	1.1 to 1.5Nm
αi SP 22, αi SP 26 αi SP 30, αi SP 37	M6	3.5 to 4.5Nm
αi SP 45, αi SP 55	U V W : M10	15 to 16Nm
	G : M6	3.5 to 4.5Nm

- 400-V input series

Cables should be connected to the αi SP using crimp terminals as listed in the following table.

Amplifier models	Terminal screw	Rigid torque
αi SP 11HV, αi SP15HV	M4	1.1 to 1.5Nm
αi SP 30HV, αi SP 45HV	M6	3.5 to 4.5Nm
αi SP 75HV , αi SP 100HV	U,V,W : M10	15 to 16Nm
	G : M6	3.5 to 4.5Nm

9.3.3.4 Details of cable K70

Connect the αi SP flange to the grounding plate through a grounding cable. (Protective ground connection)
For connection with the αi SP, use the crimp terminal selected according to the following table.

200-V input series

Amplifier model	Terminal screw	Rigid torque
αi SP 2.2, αi SP 5.5, αi SP 11 αi SP 15, αi SP 22, αi SP 26 αi SP 30, αi SP 37	M5	2 to 2.5Nm
αi SP 45, αi SP 55	M6	3.5 to 4.5Nm

See Subsection 9.3.1.7 for details of the cable K70.

400-V input series

Amplifier model	Terminal screw	Rigid torque
αi SP 5.5HV , αi SP 11HV αi SP 15HV, αi SP 30HV, αi SP 45HV	M5	2 to 2.5Nm
αi SP 75HV, αi SP 100HV	M6	3.5 to 4.5Nm

See Subsection 9.3.1.7 for details of the cable K70.

9.3.3.5 Details of cable K11

See FANUC AC SPINDLE MOTOR αi series DESCRIPTIOPNS (B-65272EN) for details of this Subsection.

9.3.3.6 Details of cable K12

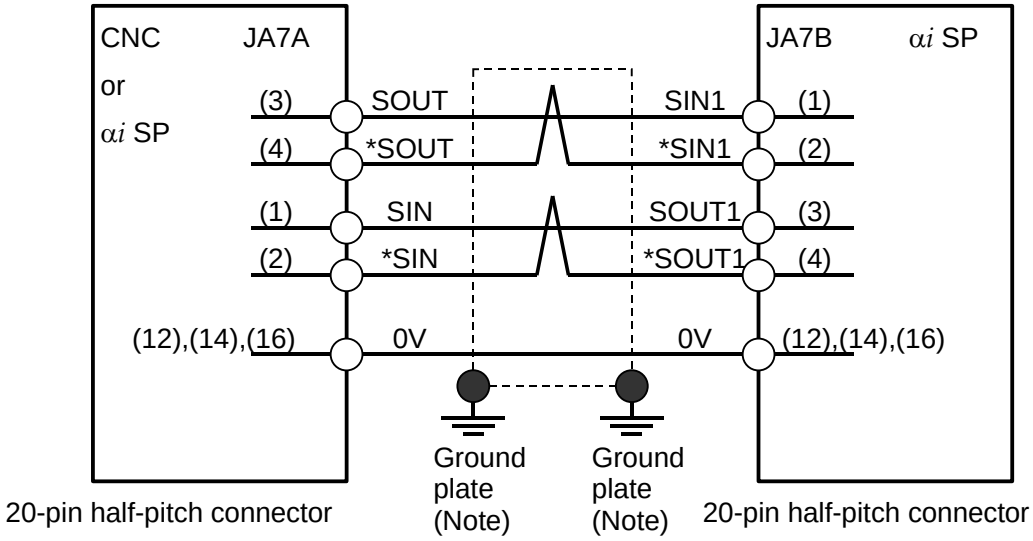

Cable specification: 0.09 mm^2 twisted pair with common shielded
Recommended cable (wire only): A66L-0001-0284#10P
See Section 9.4.1 for details of connectors applied to recommended cable.
See Appendix B for details of cables.

NOTE
If cable K12 is installed near the likes of a power cable, its shielding wire must be connected to a grounding plate. If an αi SP is installed near the CNC or another αi SP, however, it is not necessary to connect the shielding wire to a grounding plate.

Connector pin assignment

JA7A and JA7B

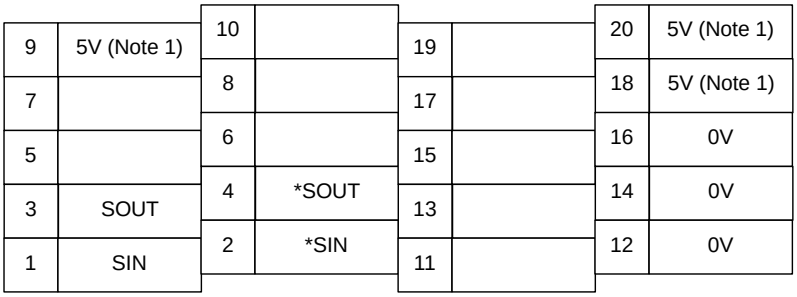

NOTE

1 The +5V pin is intended for optical link transmission based on the optical I/O link adapter. Do not use it when a metal cable is being used; otherwise, the +5 V line of the CNC will be short-circuited with that of the αi SP.

2 αi SP serial interface connection using an optical fiber cable

The use of an optical I/O link adapter with the αi SP serial interface extends the maximum allowable length of the optical fiber cable to up to 200 m.
Use optical fiber cables in the following cases:

- When the required cable length is 20 m or longer.
- When the cable must be extended across multiple cabinets, and the cabinets cannot be connected with a grounding wire 5.5 mm^2 or larger.
- The cable may be affected by noise, for example, if the cable is laid near a strong magnetic noise source like a welding machine or in parallel with a power line over a long distance.

- Electrical interface connection between two αi SP units

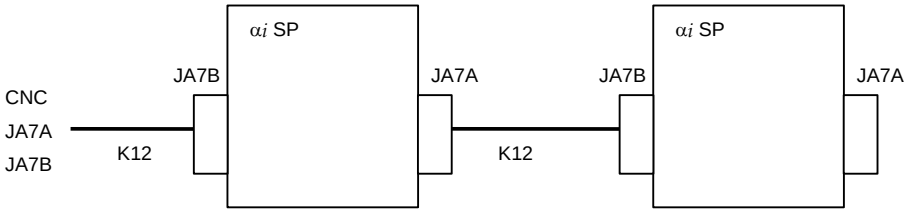

- Electrical interface connection between four αi SP units in i series

Refer to the applicable CNC Connection Manual (Hardware) for a detailed description of the serial spindle connector panel.

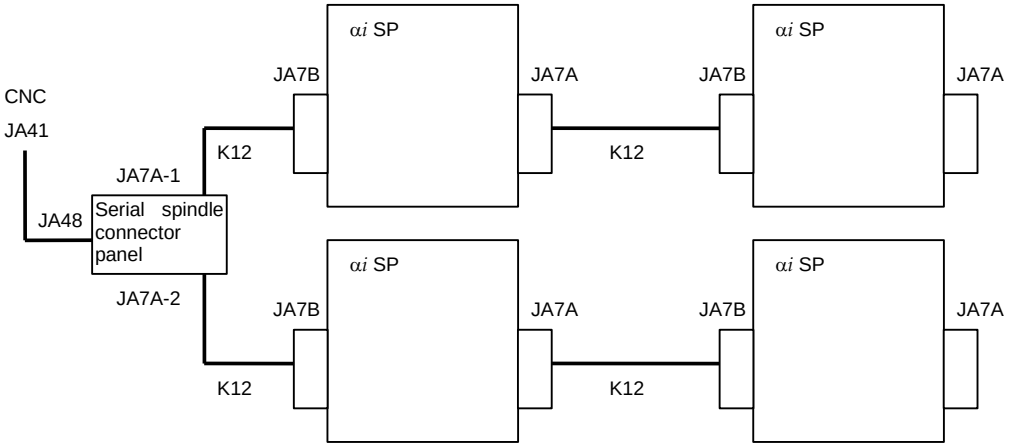

9.3.3.7 Details of cable K14

For the motor with αiM sensor

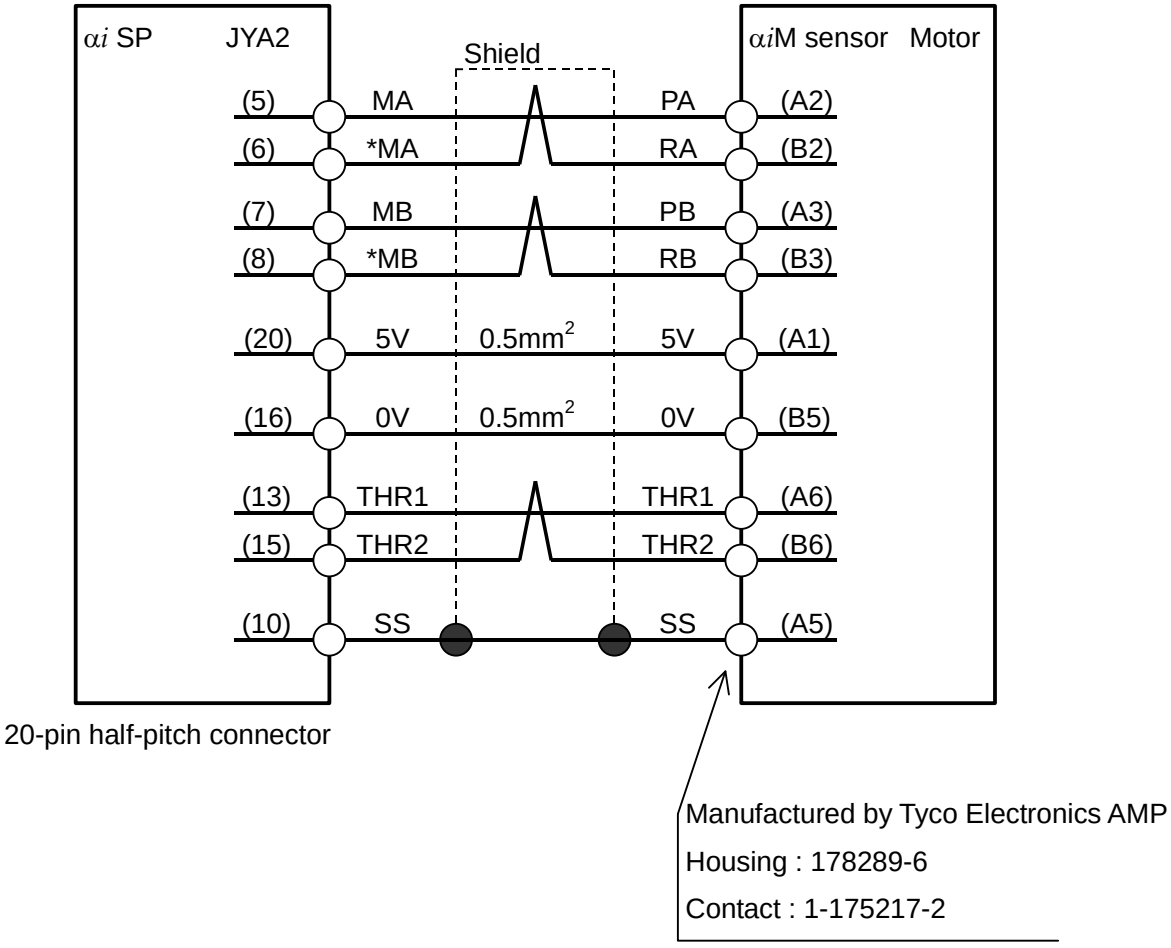

Cable specification :
6 common shielded cable
(Three 0.18mm^2 twisted pairs + 0.5mm^2 wires)
Recommended cable conductor : A66L-0001-0368
See Section 9.4.1 for explanations about the JYA2-side connector that matches the recommended cable. See Appendix B, "About Cable Conductors," for detailed explanations about the cable.

NOTE
If only one 5 V line and only one 0 V line are used, use pins 20 and 16 for them, so that, if the connector is attached the wrong way, the sensor can be prevented from being damaged.

⚠ **WARNING**
If the feedback signal is connected incorrectly, an unpredictable motor operation may occur.

- Connector pin assignment

JYA2

9	5V	10	SS	19	#	20	5V
7	MB	8	*MB	17	#	18	5V
5	MA	6	*MA	15	THR2	16	0V
3	#	4	#	13	THR1	14	0V
1	MZ	2	*MZ	11	#	12	0V

NOTE
Do not use any pin that is marked #, because they may already be in use for input/output signals for an optional PCB.

Pin arrangement of the connector (manufactured by Tyco Electronics AMP) on the motor side

A1	+5V	B1	
A2	PA	B2	RA
A3	PB	B3	RB
A4		B4	
A5	SS	B5	0V
A6	THR1	B6	THR2

For the αiI 0.5 spindle motor with αi M sensor

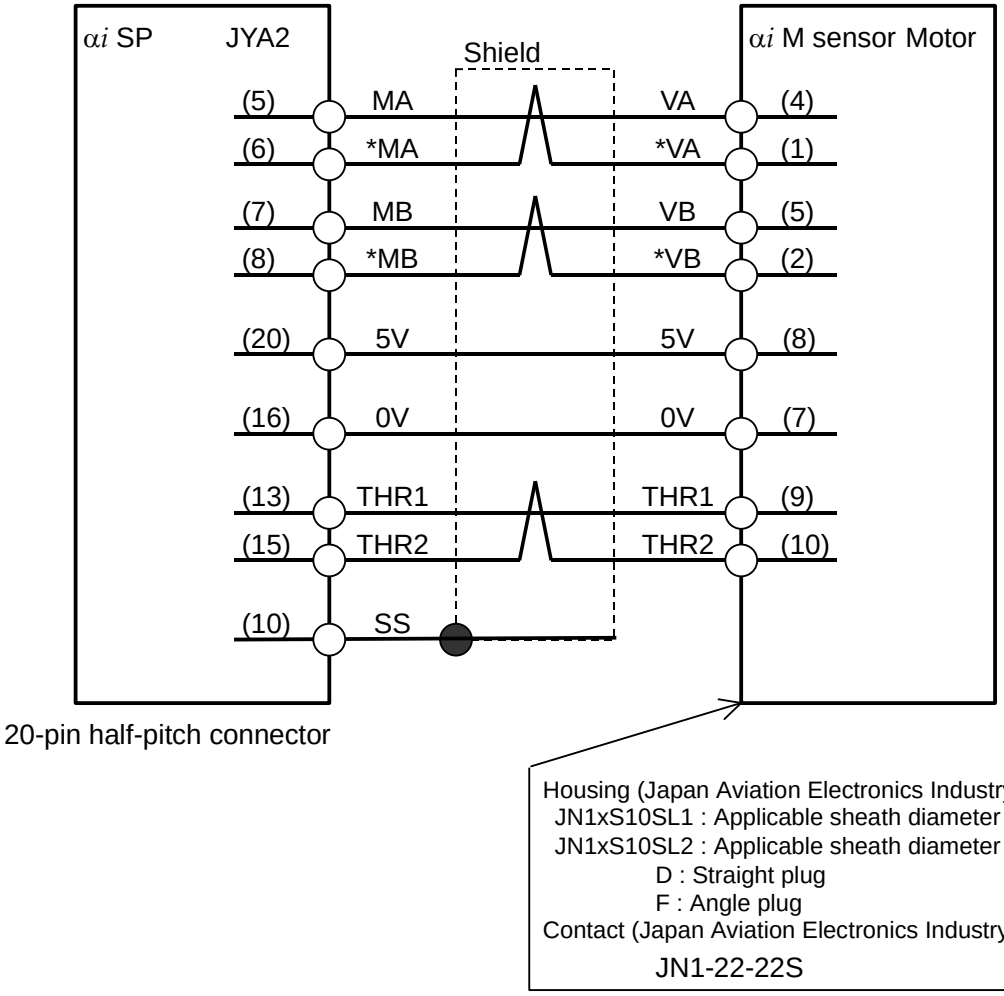

Cable specification :

2 common shielded cable

(Three 0.2mm^2 twisted pairs + 0.3mm^2 wires)

Recommended cable conductor : A66L-0001-0482

See Section 9.4.1 for explanations about the JYA2-side connector that matches the recommended cable. See Appendix B, "About Cable Conductors," for detailed explanations about the cable.

NOTE

Keep the electrical resistance across each of the 5V and 0V lines to within 5.7Ω.

Recommended cable : Up to 41m

Connector pin assignment

Pin arrangement of the connector (manufactured by Japan Aviation Electronics Industry) on the motor side

1	*VA
2	*VB
3	
4	VA
5	VB
6	
7	0V
8	5V
9	THR1
10	THR2

- Crimp tool specification
  A06B-6114-K201/JN1S
  (Applicable wire diameter : AWG#22 to #24, AWG#26 to #28)

- Connector kit specification
  A06B-6114-K200/S : Straight plug (including a contact)
  A06B-6114-K200/E : Elbow plug (including a contact)

9.3.3.8 Details of cable K16

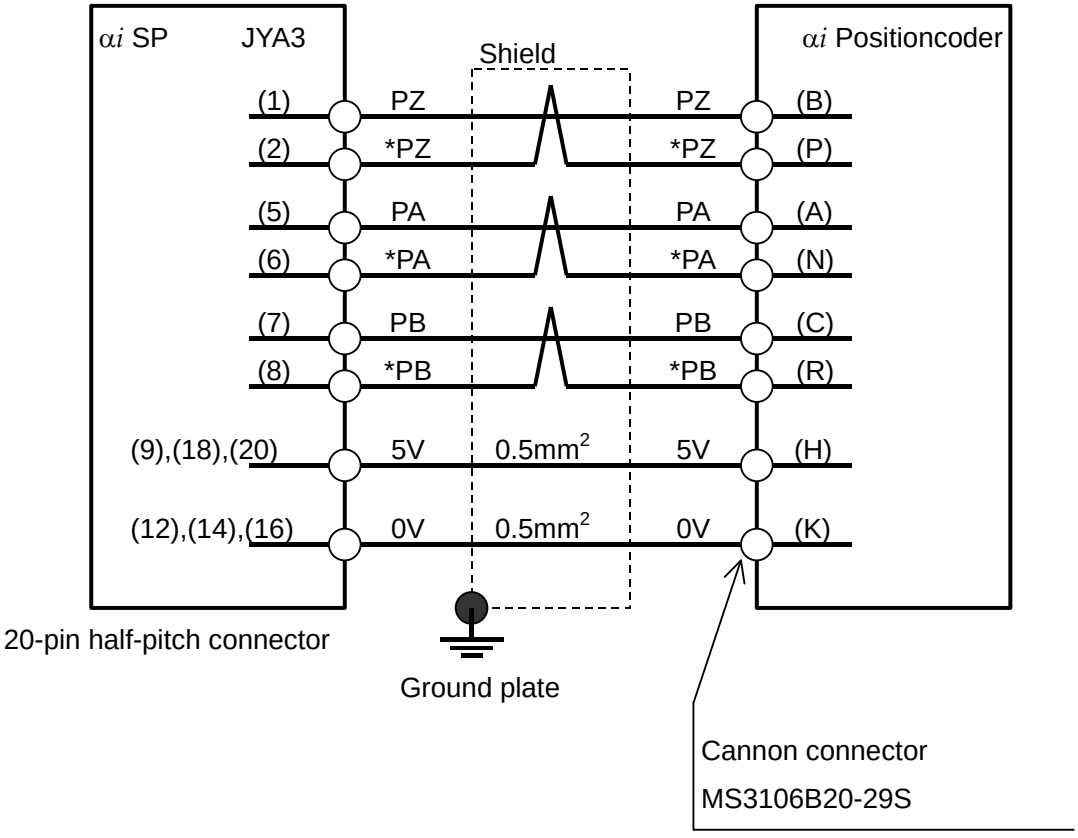

Cable specification :

6 common shielded cable

(Three 0.18mm^2 twisted pairs + 0.5mm^2 wires)

Recommended cable conductor : A66L-0001-0286

See Section 9.4.1 for explanations about the JYA3-side connector that matches the recommended cable. See Appendix B, "About Cable Conductors," for detailed explanations about the cable.

NOTE

If only one 5 V line and only one 0 V line are used, use pins 20 and 16 for them, so that, if the connector is attached the wrong way, the sensor can be prevented from being damaged.

Connector pin assignment

JYA3

9	5V	10	#	19	#	20	5V
7	PB	8	*PB	17	#	18	5V
5	PA	6	*PA	15	EXTSC	16	0V
3	#	4	#	13	SCCOM	14	0V
1	PZ	2	*PZ	11	24V	12	0V

NOTE
Do not use any pin that is marked #, because they may already be in use for input/output signals for an optional PCB.

Pin arrangement of the cannon connector on the Positioncoder side

A	PA	B	PZ	C	PB
D		E		F	
G		H	+5V	J	
K	0V	L		M	
N	*PA	P	*PZ	R	*PB
S		T			

9.3.3.9 Details of cable K17

It is unnecessary to wire THR1 and THR2 if the αi BZ sensor is used as a separate detector (connected to the connector JYA4).

For the motor with αi MZ sensor

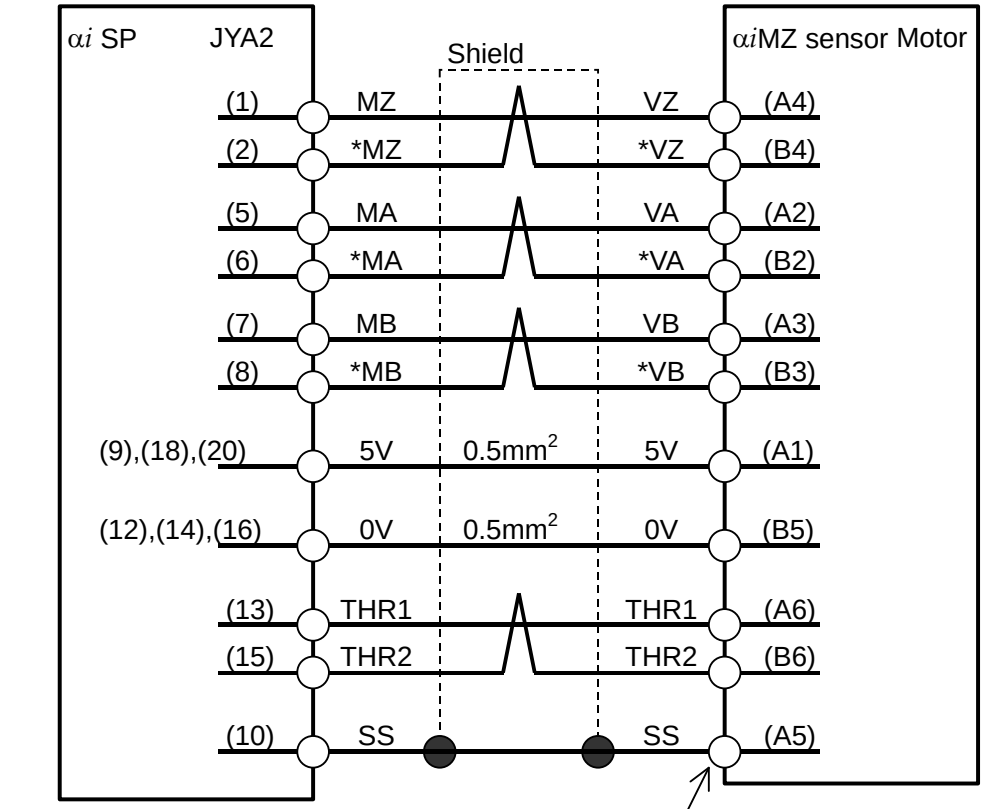

Cable specification :

6 common shielded cable
(Four 0.18mm^2 twisted pairs + 0.5mm^2 wires)

Recommended cable conductor : A66L-0001-0368

See Section 9.4.1 for explanations about the JYA2-side connector that matches the recommended cable. See Appendix B, "About Cable Conductors," for detailed explanations about the cable.

NOTE
If only one 5 V line and only one 0 V line are used, use pins 20 and 16 for them, so that, if the connector is attached the wrong way, the sensor can be prevented from being damaged.

> ⚠ **WARNING**
> If the feedback signal is connected incorrectly, an unpredictable motor operation may occur.

- Connector pin assignment

JYA2
See Subsection for cable K14.

JYA4

9	5V	10	SS	19	#	20	5V
7	MB	8	*MB	17	#	18	5V
5	MA	6	*MA	15		16	0V
3	#	4	#	13		14	0V
1	MZ	2	*MZ	11	#	12	0V

> **NOTE**
> Do not use any pin that is marked #, because they may already be in use for input/output signals for an optional PCB.

Pin arrangement of the connector (manufactured by Tyco Electronics AMP) on the motor side

A1	+5V	B1	
A2	VA	B2	*VA
A3	VB	B3	*VB
A4	VZ	B4	*VZ
A5	SS	B5	0V
A6	THR1	B6	THR2

For the αiI 0.5 spindle motor with αi MZ sensor

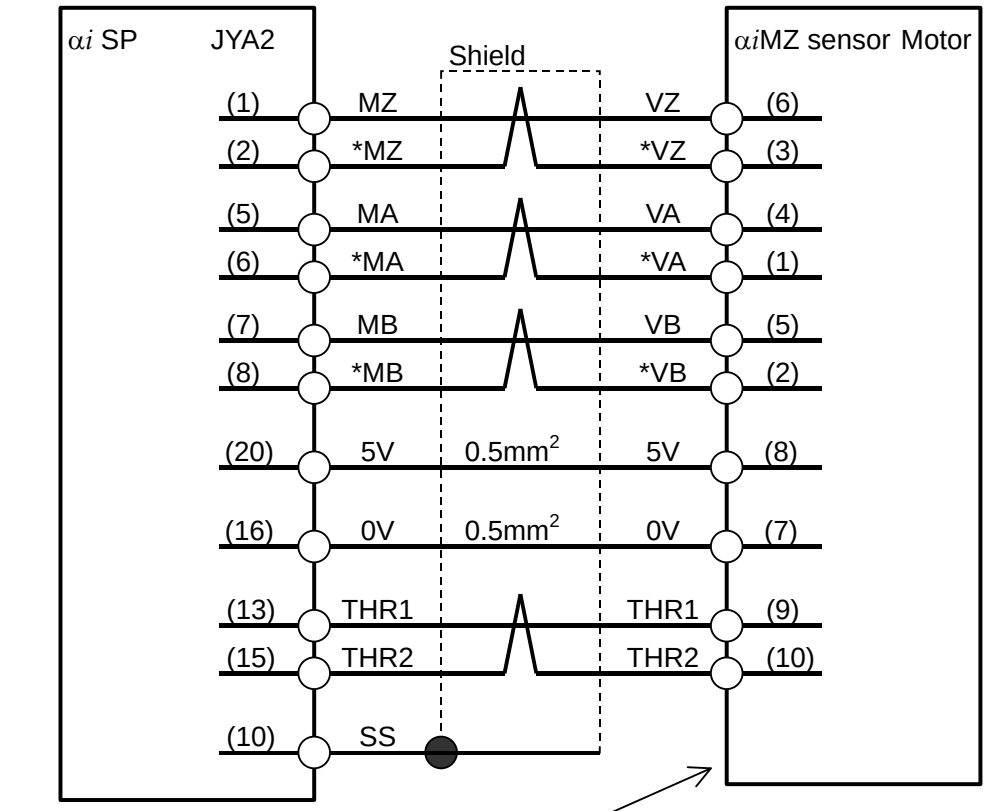

Housing (Japan Aviation Electronics Industry)
JN1xS10SL1 : Applicable sheath diameter ϕ5.7 to 7.3
JN1xS10SL2 : Applicable sheath diameter ϕ6.5 to 8.0
D : Straight plug
F : Angle plug
Contact (Japan Aviation Electronics Industry)
JN1-22-22S

Cable specification :
2 common shielded cable
(Four 0.2mm^2 twisted pairs + 0.3mm^2 wires)
Recommended cable conductor : A66L-0001-0482
See Section 9.4.1 for explanations about the JYA2-side connector that matches the recommended cable. See Appendix B, "About Cable Conductors," for detailed explanations about the cable.

NOTE
Keep the electrical resistance across each of the 5V and 0V lines to within 4Ω.
Recommended cable : Up to 28m

- Connector pin assignment

Pin arrangement of the connector (manufactured by Japan Aviation Electronics Industry) on the motor side

1	*VA
2	*VB
3	*VZ
4	VA
5	VB
6	VZ
7	0V
8	5V
9	THR1
10	THR2

- Crimp tool specification
  A06B-6114-K201/JN1S
  (Applicable wire diameter : AWG#22 to #24, AWG#26 to #28)

- Connector kit specification
  A06B-6114-K200/S : Straight plug (including a contact)
  A06B-6114-K200/E : Elbow plug (including a contact)

αiBZ Sensor (conventional shape, A860-2120-T***) and αiBZ sensor (compact type, A860-2155-T***)

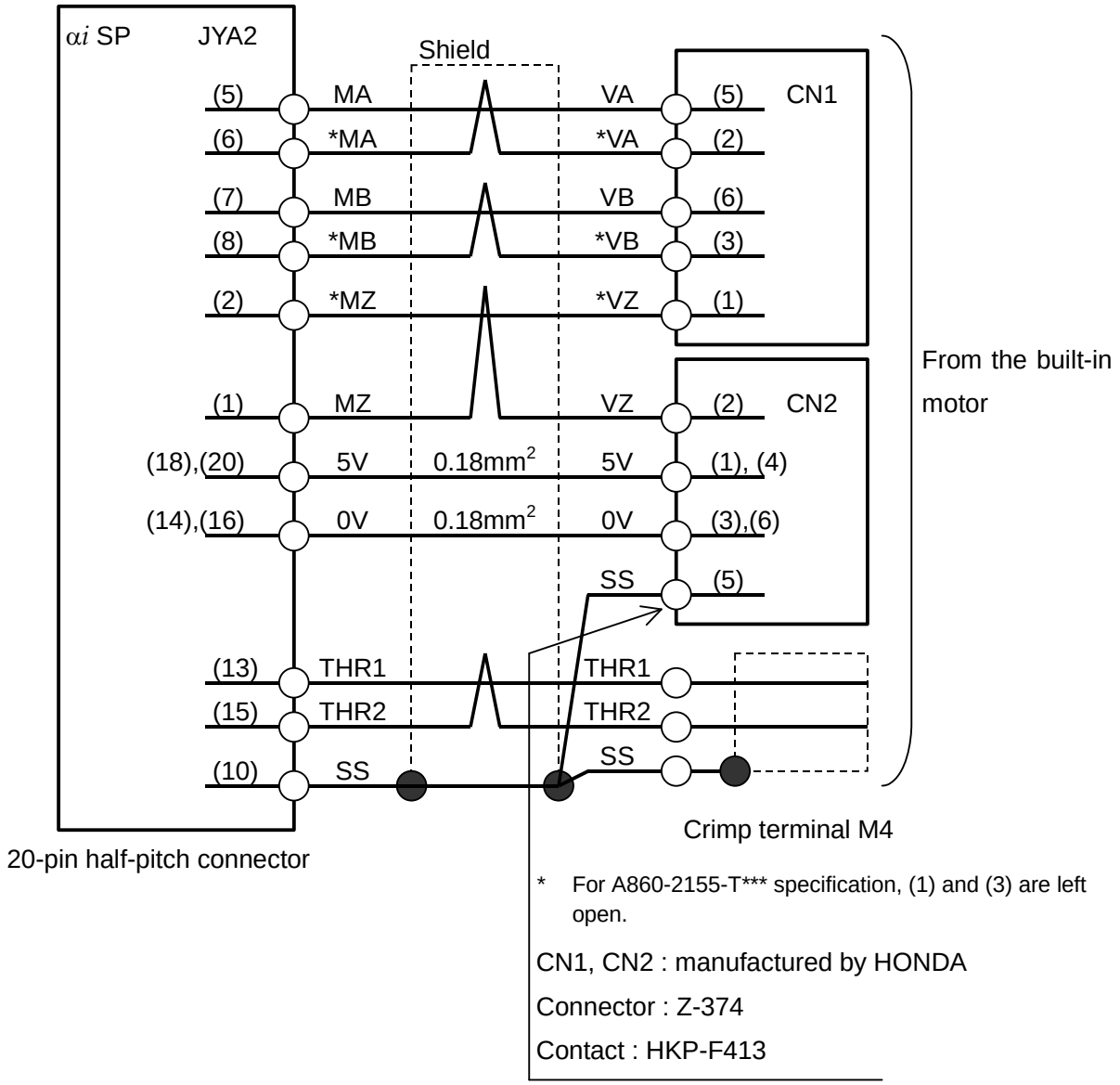

Cable specification :

4 common shielded cable

(Four 0.18mm^2 twisted pairs + 0.18mm^2 wires)

Recommended cable conductor : A66L-0001-0367

See Section 9.4.1 for explanations about the JYA2-side connector that matches the recommended cable. See Appendix B, "About Cable Conductors," for detailed explanations about the cable.

NOTE

If only one 5 V line and only one 0 V line are used, use pins 20 and 16 for them, so that, if the connector is attached the wrong way, the sensor can be prevented from being damaged.

- Connector pin assignment

Pin arrangement of the connector CN1 (manufactured by Honda Tsushin Kogyo Co., Ltd.) on the motor side

1	*VZ	4	
2	*VA	5	VA
3	*VB	6	VB

Pin arrangement of the connector CN2 (manufactured by Honda Tsushin Kogyo Co., Ltd.) on the motor side

1	5V	4	5V
2	VZ	5	SS
3	0V	6	0V

For A860-2155-T*** specification, pins 1 and 3 of CN2 are left open.

αiBZ sensor (compact type, A860-2150-T***)

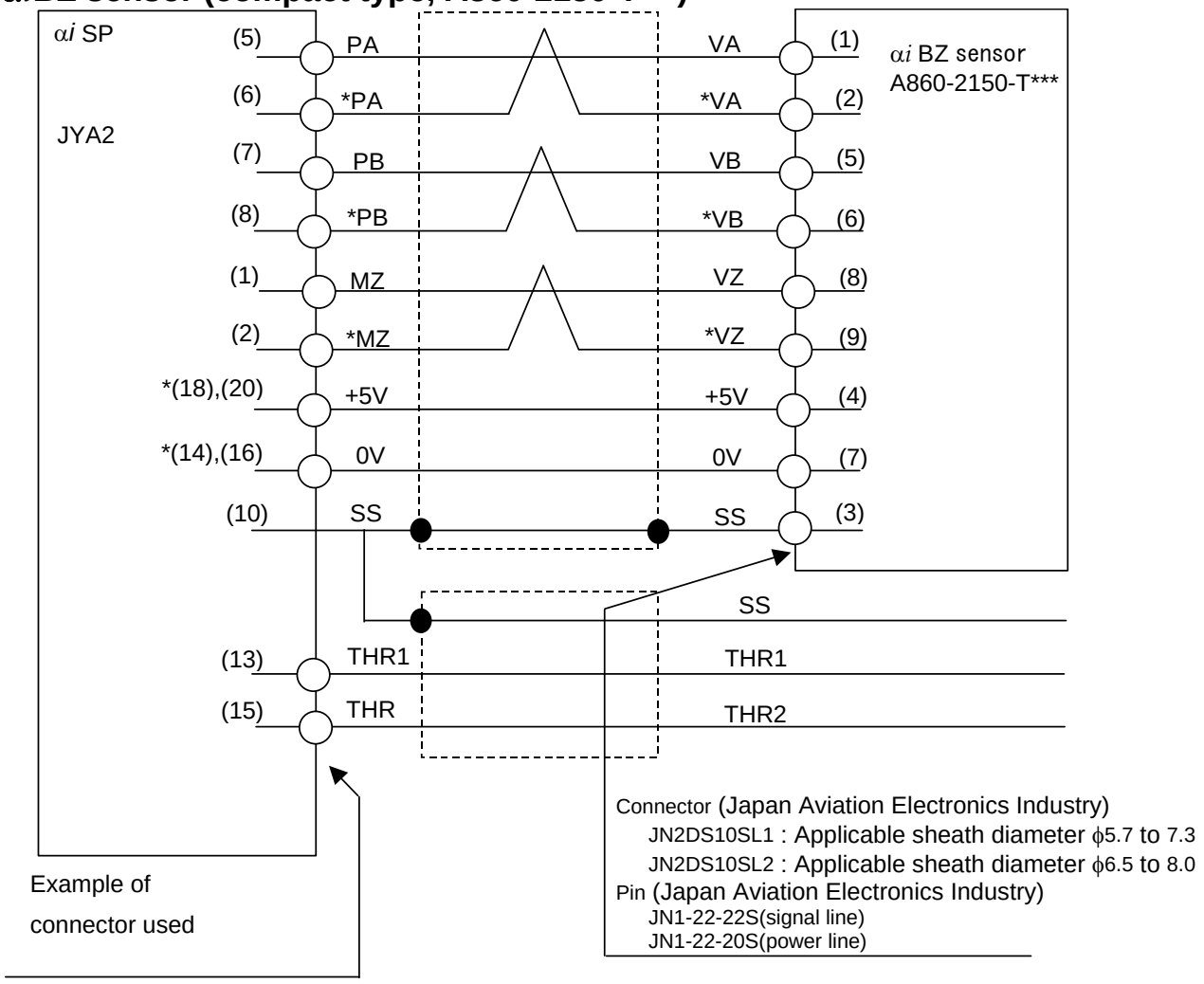

Recommended cable conductor : A66L-0001-0482

Cable length	28 m max
5V, 0V	0.3mm^2 (Connected to one of the pins marked *)
VA,*VA,VB,*VB,VZ,*VZ	0.2mm^2 twisted pair × 3

Crimp tool specification
A06B-6114-K201/JN1S : For 0.3 mm^2
A06B-6114-K201/JN1L : For 0.18 mm^2 and 0.5 mm^2

Connector kit specification
A06B-6114-K204/S : Straight plug (including a contact)

- Connector pin assignment

αiBZ sensor head side: Connector manufactured by Japan Aviation Electronics Industry

1	VA
2	*VA
3	SS
4	5V
5	VB
6	*VB
7	0V
8	VZ
9	*VZ
10	

9.3.3.10 Details of cable K33

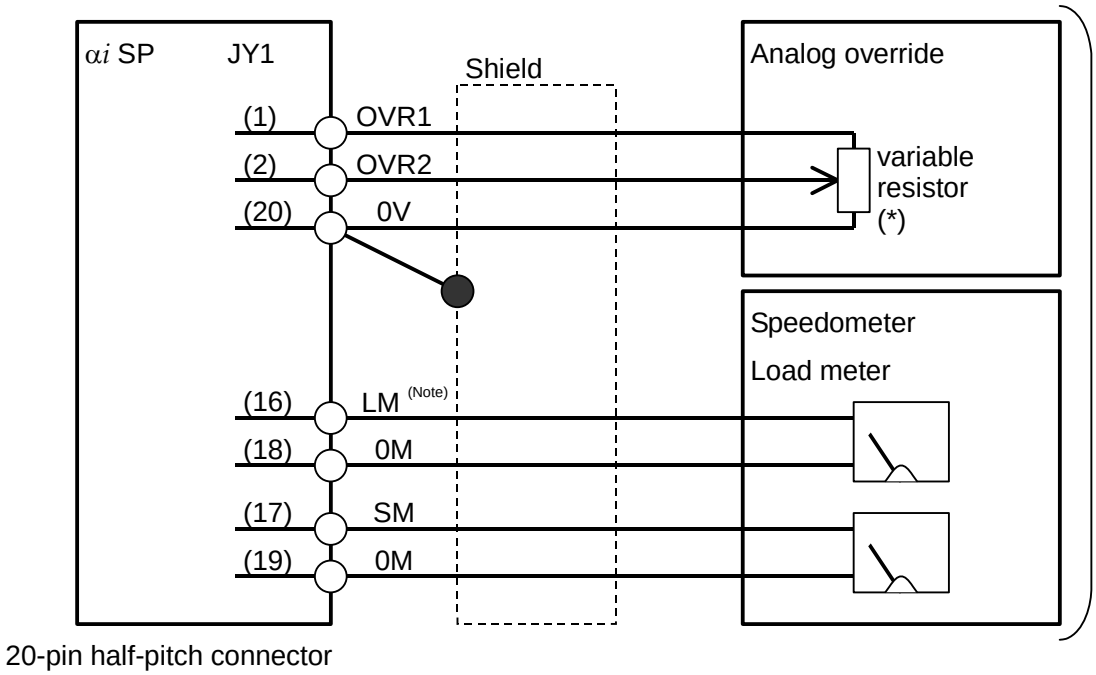

Cable specification :

$0.09mm^2$ common shielded cable

Recommended cable conductor : A66L-0001-0284#10P

See Section 9.4.1 for explanations about the JYA1-side connector that matches the recommended cable. See Appendix B, "About Cable Conductors," for detailed explanations about the cable.

NOTE

Select such an external resistance such that VR+R1 falls within the range between 2 kΩ and 10 kΩ .

Connector pin assignment

JY1

9	#	10	#	19	0M	20	0V
7	#	8	#	17	SM	18	0M
5	#	6	#	15	#	16	LM
3	#	4	#	13	#	14	#
1	OVR1	2	OVR2	11	#	12	#

NOTE
Pins indicated # are intended to input or output signals used on a spindle check board. Do not connect any other signal line to them.

Voltage signal for the speedometer (SM)

By externally connecting a tachometer, the speed of the spindle motor can be indicated. The voltage (DC) proportional to the speed is output, regardless of the rotation direction of the motor. At the maximum motor speed, +10 V is output.

The output voltage of the speedometer in the forward direction and reverse direction is calibrated using a parameter. The precision is ±3% Max.

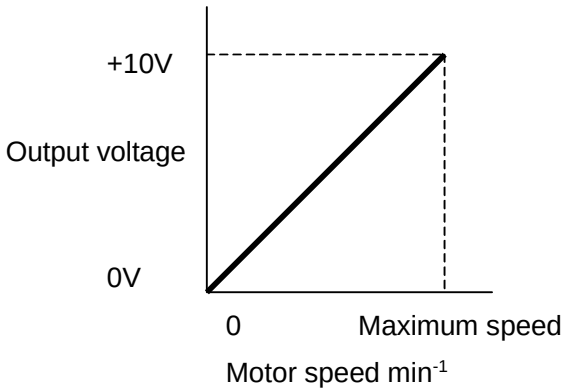

Voltage signal for the load meter (LM)

The load meter indicates a load ratio, that is, the ratio of load at the time of non-load rotation of the machine tool spindle or at the time of cutting to the maximum output of the spindle motor. At the rated input voltage, the relationships of spindle motor output, spindle motor torque, and voltage for the load meter with speed are as described below.

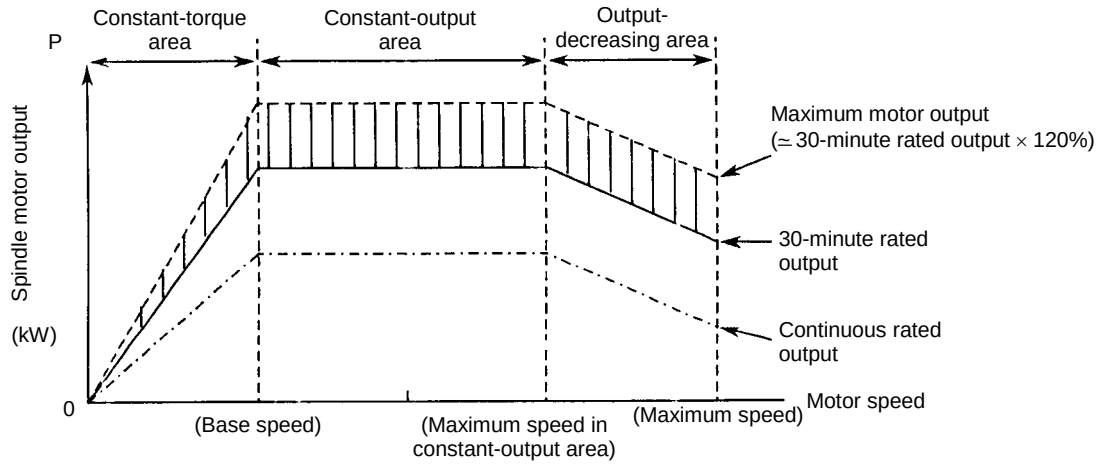

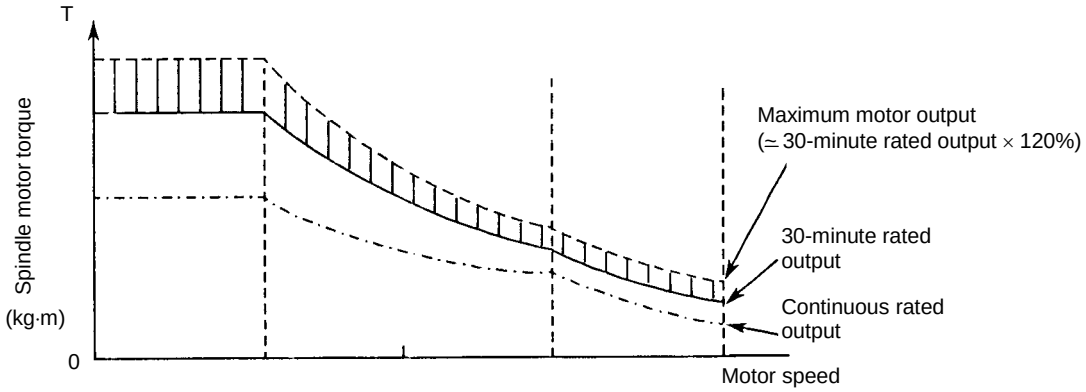

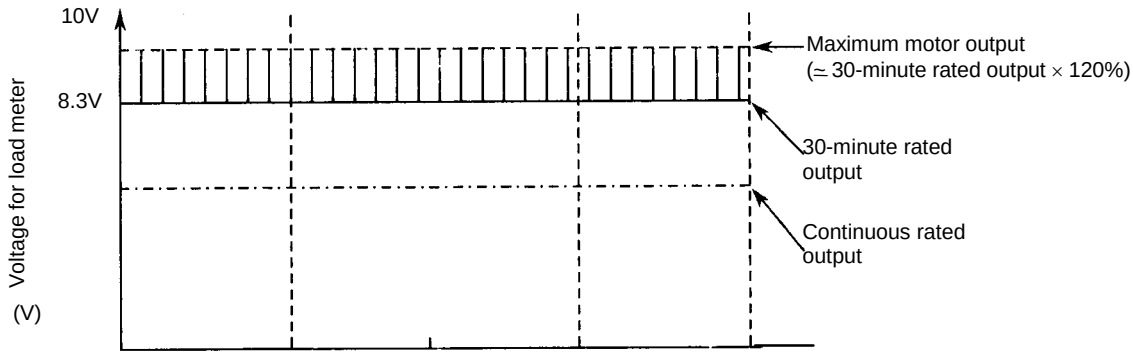

A load meter indication of 100% is provided for the continuous rating of the spindle motor. The table below indicates the relationships between typical spindle motor output values and load meter voltages. From the table below, it is considered that approximately five load meter indications are provided.

Motor model	Output (kW)	Voltage for load meter (V)(NOTE)	Ratio (%) with 100% indicated for continuous rating	Example of load meter	
				Type of load meter used	Ratio to full scale (%)
αiI 0.5/10000	0.55	4.2	100	E	100
	1.1	8.3	200		200
	1.32	10.0	240		240
αiI 1/10000	1.5	5.7	100	A	102.2
	2.2	8.3	147		150
	2.64	10.0	176		180
αiI 1.5/10000	1.1	2.5	100	D	100
	3.7	8.4	338		338
	4.4	10.0	400		400
αiI 2/10000	2.2	5.0	100	C	101
	3.7	8.3	166		166
	4.4	10.0	200		200
αiI 3/10000	3.7	5.6	100	A	100.8
	5.5	8.3	148		150
	6.6	10.0	178		180
αiI 6/10000	5.5	6.1	100	A	109.8
	7.5	8.3	136		150
	9.0	10.0	164		180
αiI 8/8000	7.5	5.7	100	A	102.6
	11.0	8.3	146		150
	13.2	10.0	175		180
αiI 12/7000	11	6.1	100	A	109.8
	15	8.3	136		150
	18	10.0	164		180
αiI 15/7000	15	6.7	100	B	100.5
	18.5	8.3	124		125
	22.2	10.0	149		150
αiI 18/7000	18.5	7.0	100	B	105
	22.0	8.3	118		125
	26.4	10.0	142		150
αiI 22/7000	22.0	7.0	100	B	105
	26.0	8.3	118		125
	31.2	10.0	142		150
αiI 30/5000	30.0	6.7	100	B	105.5
	37.0	8.3	124		125
	44.4	10.0	149		150
αiI 40/6000	37.0	6.8	100	B	103
	45.0	8.3	122		125
	54.0	10.0	146		150
αiI 50/4500	45.0	6.8	100	B	103
	55.0	8.3	122		125
	66.0	10.0	146		150

NOTE
The precision of load meter voltage depends on the used speed and input voltage. The maximum error is about ±15%.

Type	Type	Scale	
A	Color classification Indication Correspondence to voltage	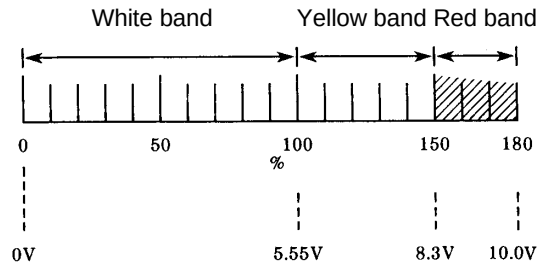	
B	Color classification Indication Correspondence to voltage	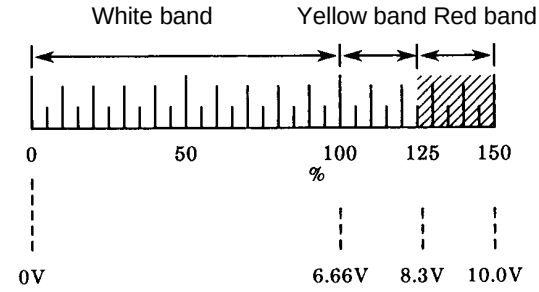	
C	Color classification Indication Correspondence to voltage	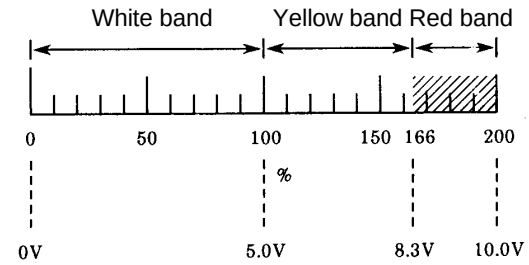	
D	Color classification Indication Correspondence to voltage	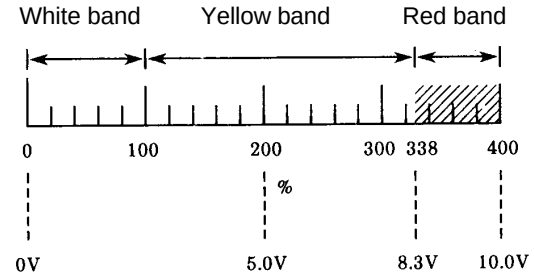	
E	Color classification Indication Correspondence to voltage	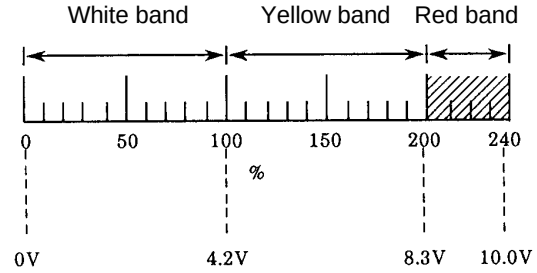	

Indication for spindle switching and output switching

The speed indication voltage and dynamometer indication voltage may vary between the main spindle and sub-spindle in spindle switching and between the high winding and low winding in output switching. In such a case, switch the tachometer and dynamometer as shown below.

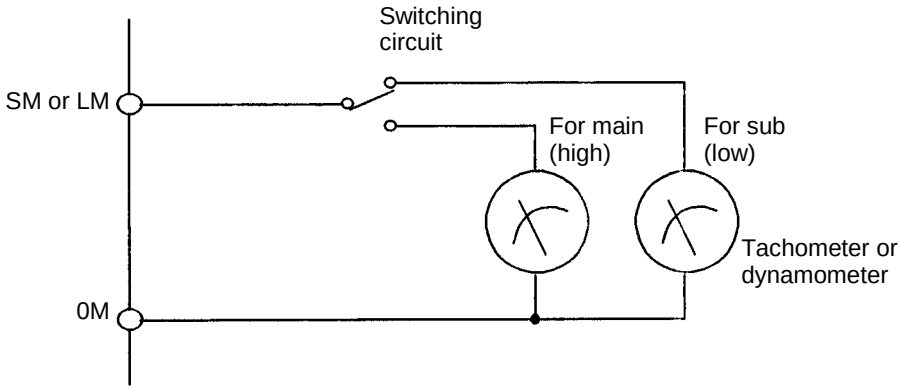

9.3.3.11 Details of cable K36

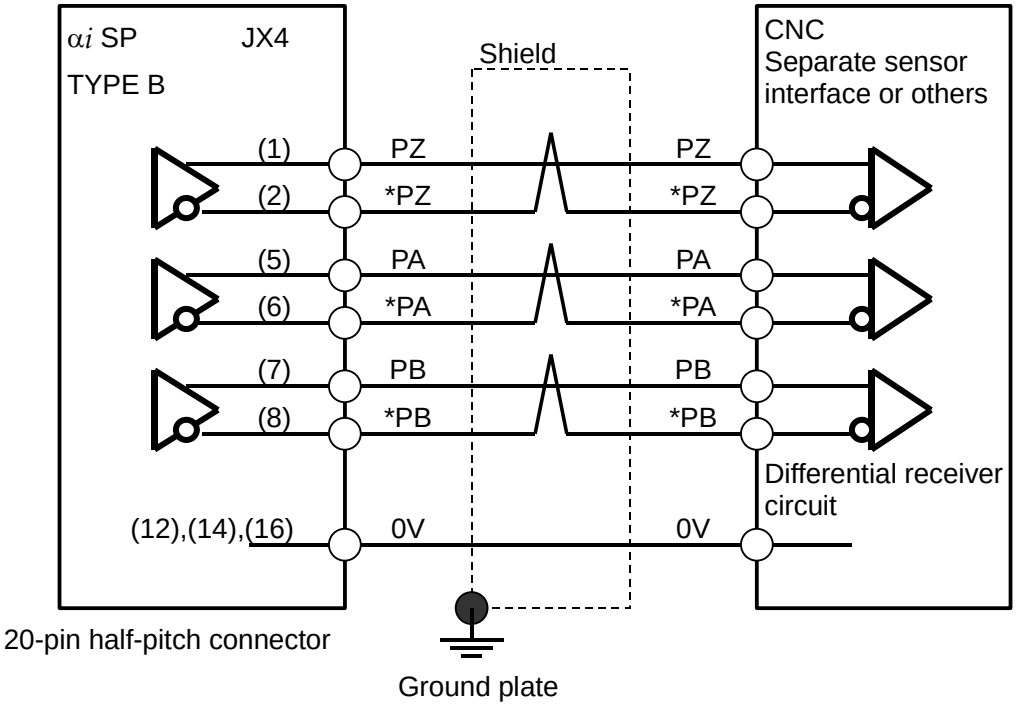

Cable specification: 0.09 mm^2 twisted pair with common shielded
Recommended cable (wire only): A66L-0001-0284#10P
See Section 9.4.1 for details of connectors applied to recommended cable.
See Appendix B for details of cables.

Specification of position coder signal output

Item	Specification
SPM input sensor	αi position coder αi position coder S αi MZ sensor αi BZ sensor
Output signals PA, *PA, PB, *PB	1024 pulses/rotation (*1)
Output signals PZ, *PZ	1 pulse/rotation
Output signal level	Differential driver signal (RS422 compatible)

*1 A resolution of 4096 pulses/rotation can be obtained by counting the edges of phases A and B (× 4 circuit).

Phase A/B signal

Width of phase A/B signal

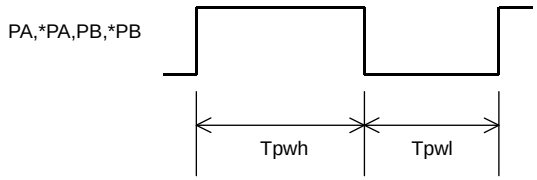

Phase difference between phase A and phase B

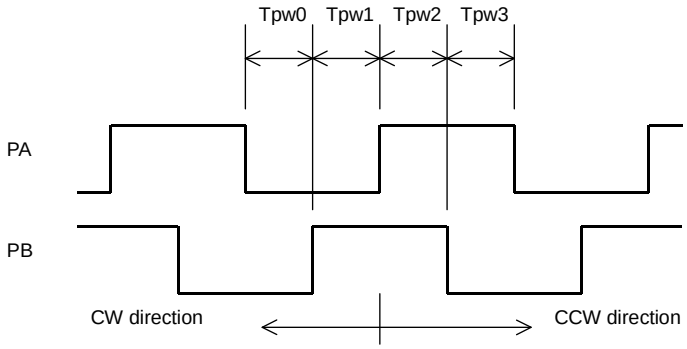

*PA and *PB represent the negative logic signals of PA and PB, respectively.

Symbol	Specification	Remark
Tpwh, Tpwl	Min 636ns	Including a maximum of driver rising/falling delay time skew (30 ns)
Tpw0,1,2,3	Min 636ns	

This specification does not include the effect of the cable capacity and the skew due to delay on the receiver side.

⚠ CAUTION

As shown in state A below, a waveform may be distorted at the edge of phase A or B.
In addition, the edge may be encountered too late or too early as shown in state B or C. Even in these states, the minimum time is defined according to the specifications described on the previous page, such as the pulse width and the difference between phase A and phase B.

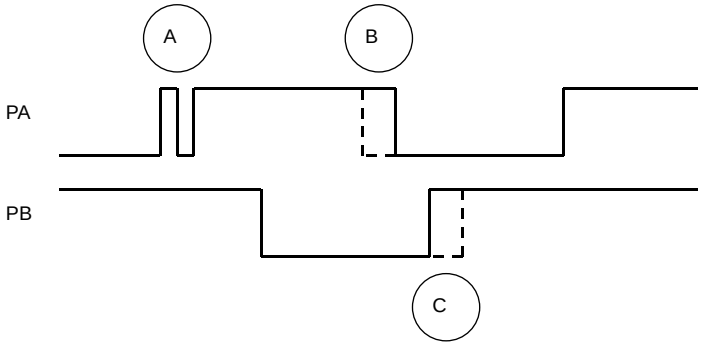

Phase Z signal

Width of phase Z signal

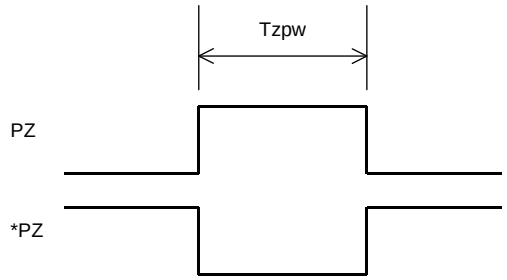

Symbol	Specification
Tzpw	The minimum width is 1/4096 of one rotation.

* Edge distortion of signal Z
Note that the edge of signal Z may be distorted.

* Phase relationship between the phase Z signal and the phase A/B signal

- The phase relationship between the phase Z signal and the phase A/B signal varies with the sensor.
- When the speed changes, the phase relationship between the phase Z signal and the phase A/B signal may vary. The range of variation is approximately (1 p/5000 min-1.

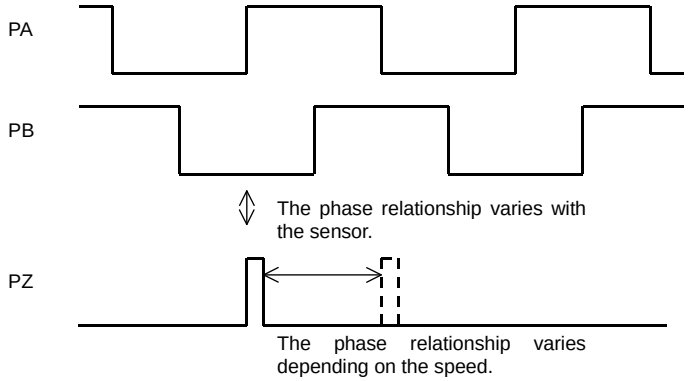

9.3.3.12 Details of cable K71

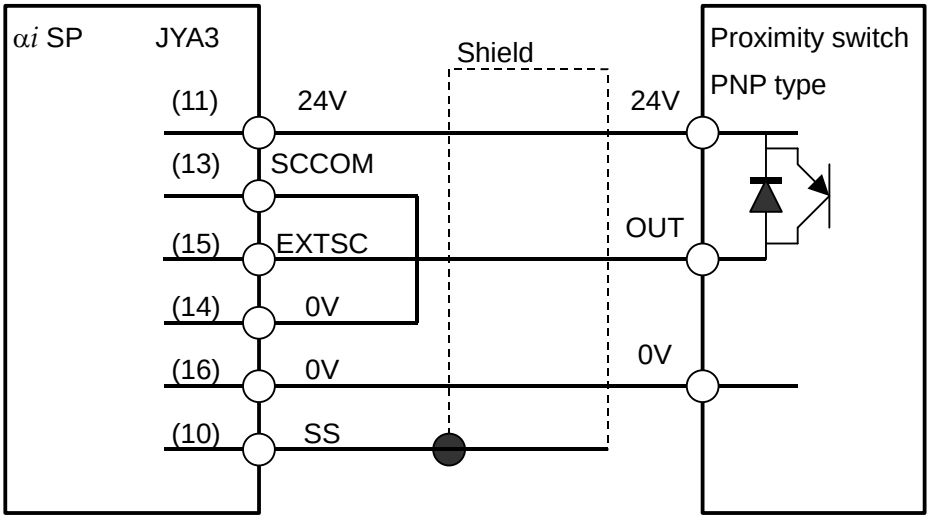

20-pin half-pitch connector

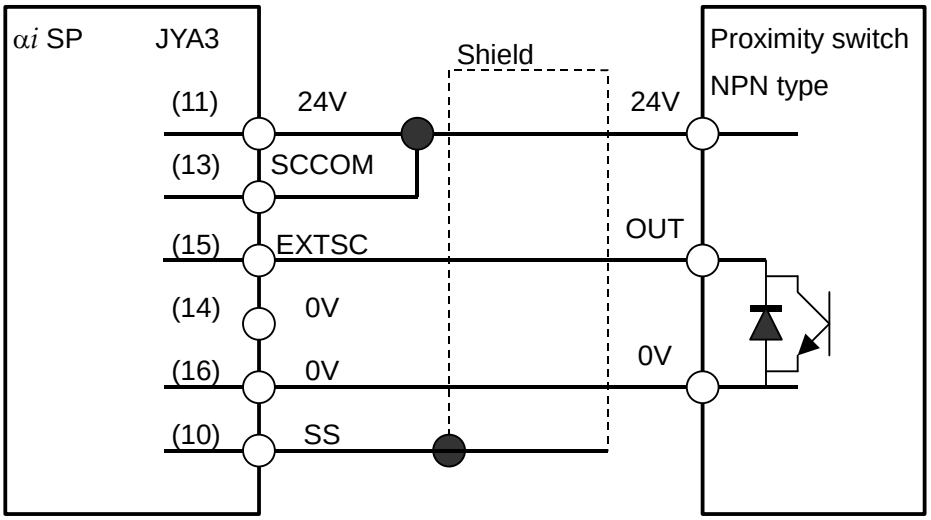

20-pin half-pitch connector

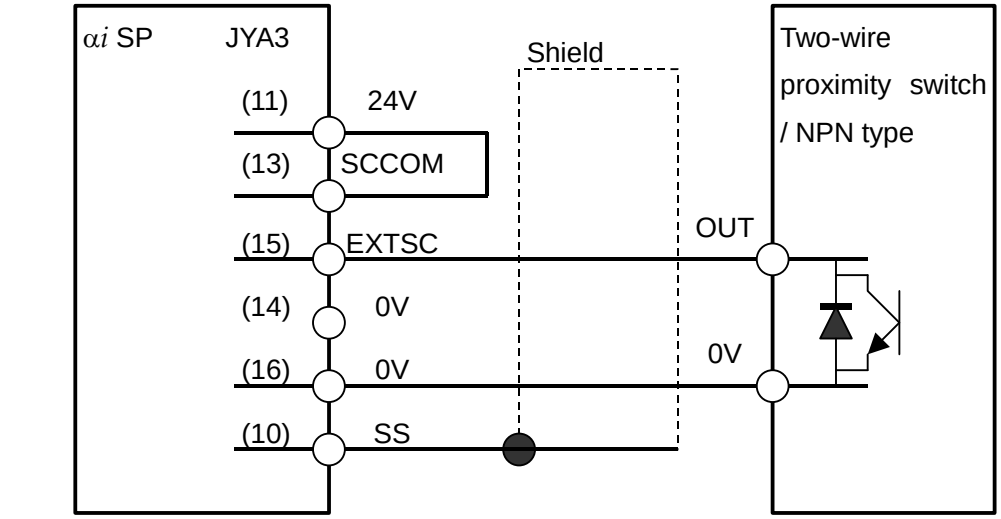

20-pin half-pitch connector

Cable specification :

0.09mm^2 common shielded cable

Recommended cable conductor : A66L-0001-0284#10P

See Section 9.4.1 for explanations about the JYA3-side connector that matches the recommended cable. See Appendix B, "About Cable Conductors," for detailed explanations about the cable.

Connector pin assignment

See Subsection “- Connector pin assignment” for the K16.

External one-rotation signal switch (proximity switch)

Use an external one-rotation signal switch (proximity switch) that satisfies the specifications indicated below.

(a) DC two-wire proximity switch

Item	Specification
Supply voltage	24 VDC ±1.5 V (24 VDC is fed from the spindle amplifier module.)
Response frequency	400 Hz or higher
Load current	16 mA or higher
Residual voltage	4 V or higher
Supply (leakage) current	1.5 mA or lower

(b) DC three-wire proximity switch

Item	Specification
Supply voltage	24 VDC ±1.5 V (24 VDC is fed from the spindle amplifier module.)
Response frequency	400 Hz or higher
Load current	16 mA or higher
Residual voltage	4 V or higher
Supply current	50mA or lower

NOTE
The location where a proximity switch signal occurs depends on the temperature. So, consider the ambient temperature when selecting a proximity switch.

Input signal specification (EXTSC input section)

Item	Specification
High level	20V or higher
Low level	4V or lower
Minimum signal width	100 us

NOTE
In design, the width of the signal to be detected should have a sufficient margin by considering variations in proximity switch on/off time.

9.3.3.13 Details of cable K86

Cable K86 must be up to 3 m long. To ensure noise resistance, install the αi SP and submodule SM on the same control board.

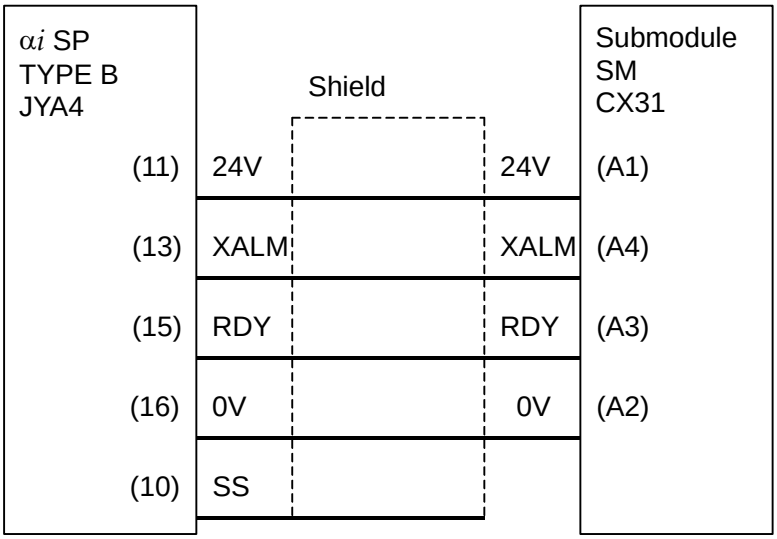

Applicable connector:

JYA4 : Solder type connector: FI40B20S,
Housing: FI-20-CVS5 manufactured by Hirose Electric Co., Ltd.

CX31 : Tyco Electronics AMP D2100 series 8 pins
Housing: 1-1318119-4, contact: 1318107-1 (4 contacts required)

Cable specification :
0V, 24V,XALM, RDY: 0.5mmSQ(AWG20 or smaller),
Common shield cable

9.3.3.14 Details of cable K88

This cable is required when using the spindle EGB function.

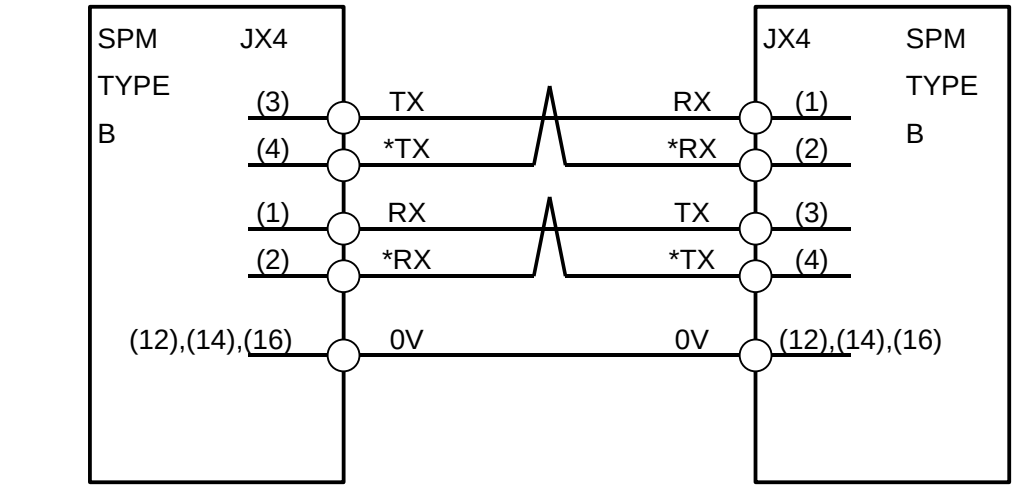

20-pin half-pitch connector 20-pin half-pitch connector

Cable specification: 0.09 mm^2 twisted pair with common shielded
Recommended cable (wire only): A66L-0001-0284#10P
See Section 9.4.1 for details of connectors applied to recommended cable.
See Appendix B for details of cables.

NOTE
1 The length of cable K88 must be 3 m or shorter and run within the same cabinet.
2 The αi SPs that use this connection must be connected to the same CNC as shown below.

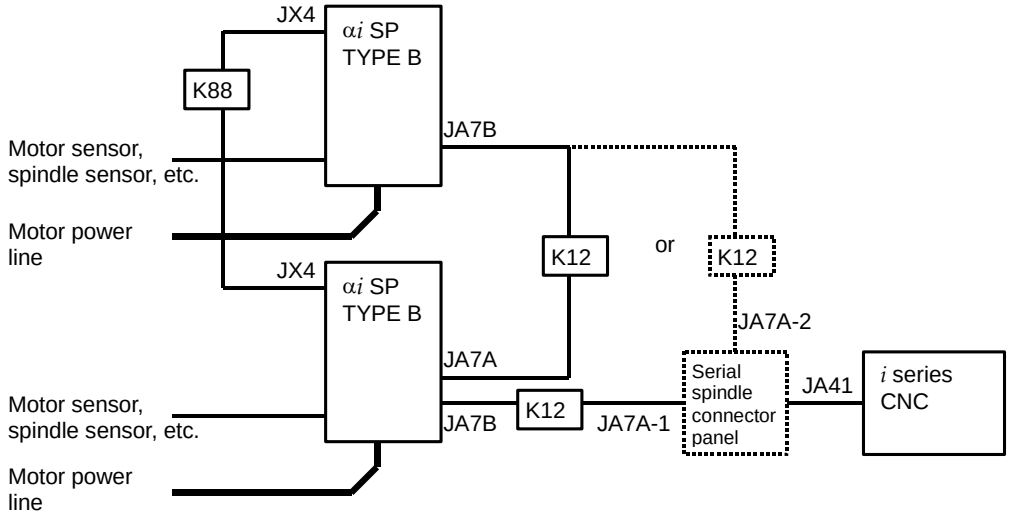

9.3.3.15 Details of cable K90

Only when the dual check safety function is used, this connection is required for the second spindle.

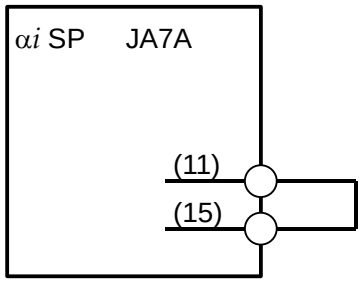

20-pin half-pitch connector

When the dual check safety function is used, connector K90 must be connected to JA7A of the second spindle.

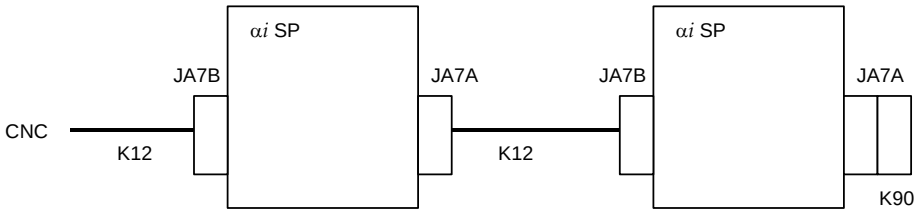

This signal is used to externally monitor the excitation status of the spindle amplifier to implement a safety circuit.

9.3.3.16 Details of cable K96

This signal is used to externally monitor the excitation status of the spindle amplifier and implement a safety circuit for the safety spindle stop function of dual check safety.
For how to configure a safety circuit with this signal, refer to the following documents coming with the "Dual Check Safety Operator's Manual" of your CNC.
"SAFE SPINDLE STOP FUNCTION with protection door open"
For the Series 30*i*/31*i*/32*i*, B-64004EN/03-01
For the Series 16*i*/18*i*/21*i*, B-63494EN/02-01

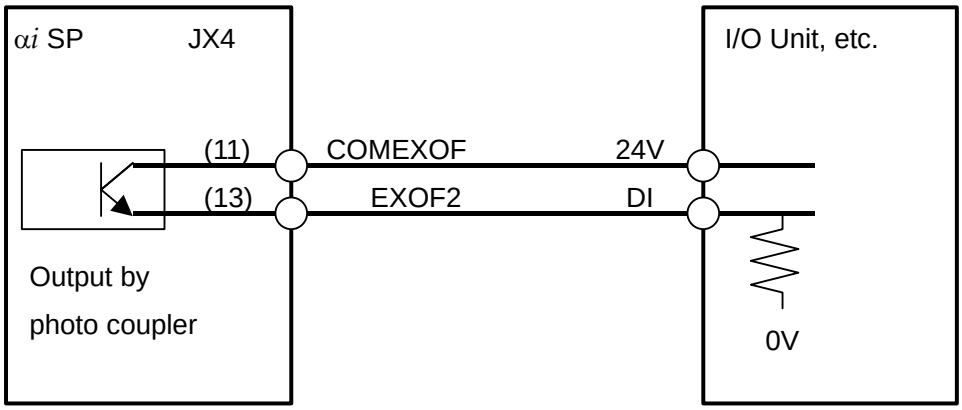

20-pin half-pitch connector

SP contact output specifications
Circuit type: Polar photo coupler
Rated voltage: 30 VDC or less
Output current: DC 40 mA or less
Saturation voltage: 1.5 V or less (at output current of 40 mA)

Open contact: Excitation on
Closed contact: Excitation off

> ⚠ **CAUTION**
> If the connector is connected incorrectly, externally supplied 24 V can damage the internal circuit of the αi SP.
> This function is not provided in A06B-6111, -6112, -6121, and -6122.

9.3.3.17 Details of cable K97

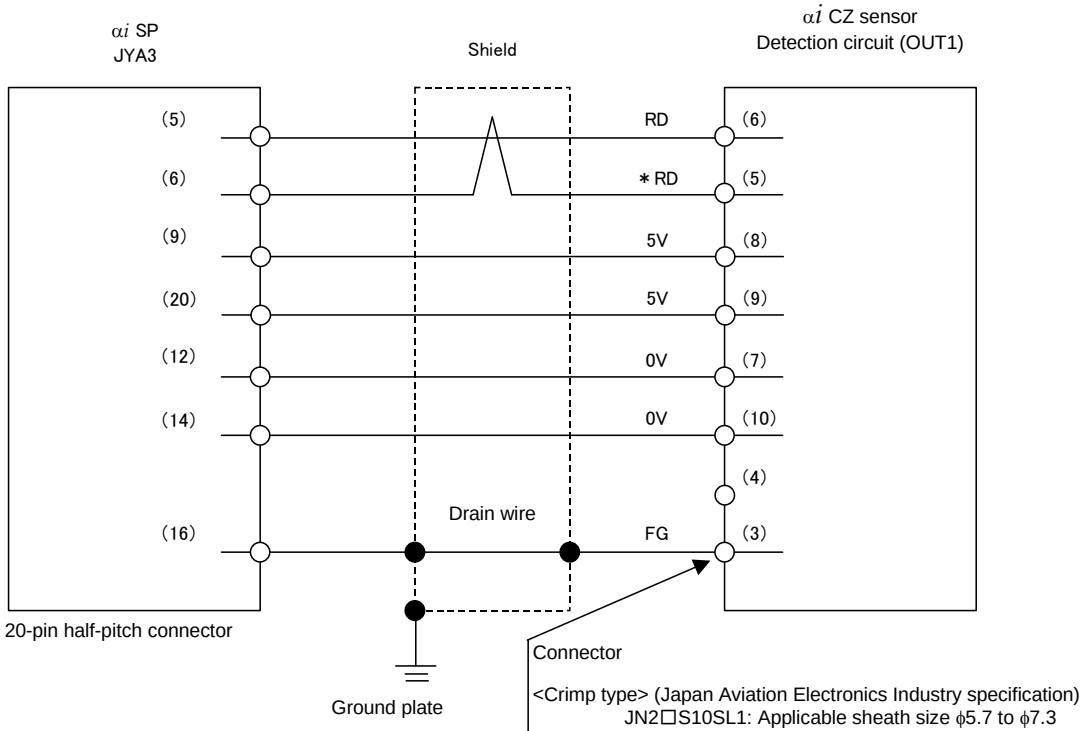

Wires used

Signal name	28 m or less	50 m or less
5V, 0V, 6V	0.3mm^2 × 5 Strand configuration 12/0.18 or 60/0.08 Insulation outer diameter 1.5 or less	0.5mm^2 × 5 Strand configuration 20/0.18 or 104/0.08 Insulation outer diameter 1.5 or less
RD, *RD	0.18 mm^2 or more Twisted-pair wire Insulation outer diameter 1.5 or less	0.18mm^2 or larger Twisted-pair wire Insulation outer diameter 1.5 or less
Drain wire	0.15mm^2 or larger	0.15mm^2 or larger

NOTE
1 The ground plate to which the shield is connected must be placed near the αiSP to minimize the distance between the αiSP and the ground plate.
2 Run the power line and signal line so that they are not in parallel.

NOTE

3 When the customer prepares the cable, the total wire resistance of 5 V and 0 V must be 2 Ω or less.

4 The maximum wire thickness applicable to the connector on the detection circuit side is 0.5 mm^2 (strand configuration: 20/0.18 or 104/0.08, insulation outer diameter: 15 or less), and the sheath is 5.7 to 8.0 in diameter. When using a wire or cable thicker than the above size is used, take measures as shown below.

[Case 1] Cable conductor exceeds 0.5mm^2.

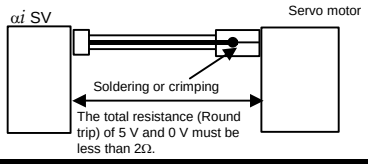

[Case 2] Sheath diameter of exceeds ϕ8.

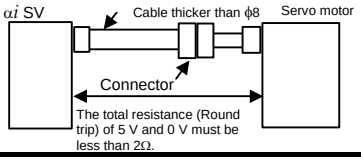

- Crimp tool specification

FANUC specification	Japan Aviation Electronics Industry specification	Applicable cable thickness
A06B-6114-K201#JN1E	CT150-2-JN1-E	21AWG(0.5mm^2:20/0.18) 23AWG(0.3mm^2) 25AWG(0.18mm^2)
A06B-6114-K201#JN1D	CT150-2-JN1-D	20AWG(0.5mm^2:104/0.08) 21AWG(0.5mm^2:20/0.18) 25AWG(0.18mm^2)

- Extractor specification
  A06B-6114-K201/JN1R
- Recommended cable

Recommended cable specification	Description	Crimp tool specification
A66L-0001-0460	Flexible cable 28 m or less	A06B-6114-K201#JN1E (FANUC specification) CT150-2-JN1-E (Japan Aviation Electronics Industry specification)
A66L-0001-0481	Fixed cable 28 m or less	
A66L-0001-0462	Flexible cable 50 m or less	A06B-6114-K201#JN1D (FANUC specification) CT150-2-JN1-D (Japan Aviation Electronics Industry specification)
A66L-0001-0491	Fixed cable 50 m or less	

- Connector kit specification
  <Crimp type>
  A06B-6114-K204#S : Straight plug (including a contact)
  A06B-6114-K204#E : Elbow plug (including a contact)
  <Solder type>
  A06B-6114-K205#S : Straight plug
  A06B-6114-K205#E : Elbow plug

9.3.3.18 Spindle Motor Feedback Cable Connection

The connector of the feedback cable connected to the spindle motor may have the following problems, depending on the wiring in the motor terminal box (transit box for the built-in motor):

- Variations in low speed become large.
- Sensor signal disconnection alarm (alarm 9073) detected incorrectly
- Sensor signal abnormality alarm (alarm 9083) detected incorrectly

Give consideration to wiring so that minimum lengths of non-shielded portions are provided for the connector connecting the cable for αi SP and signals output from the spindle motor. (See the examples below.)

(1) Sample wiring in the motor terminal box

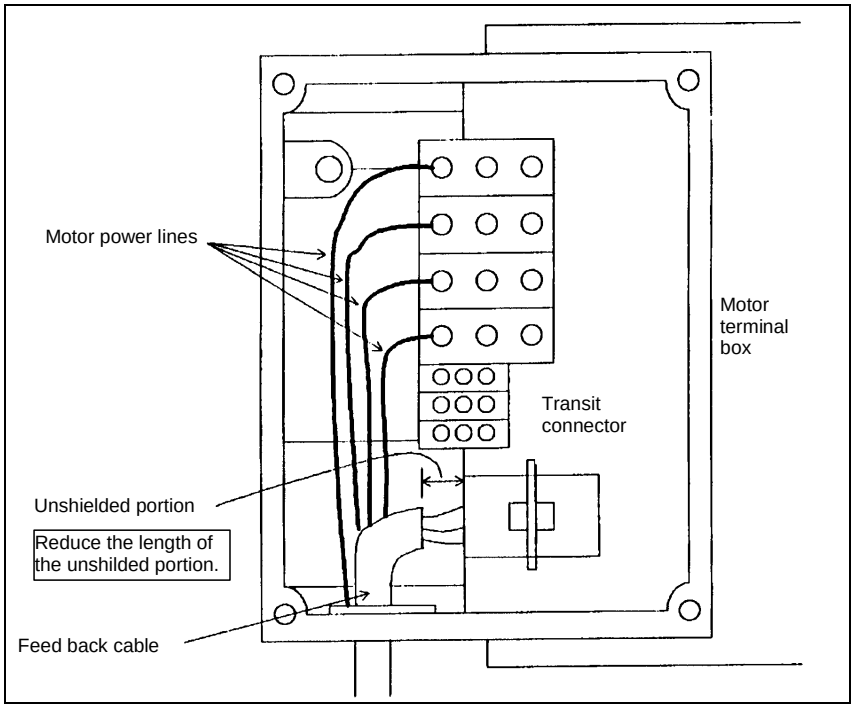

(2) Sample wiring in the relay box for the built-in motor

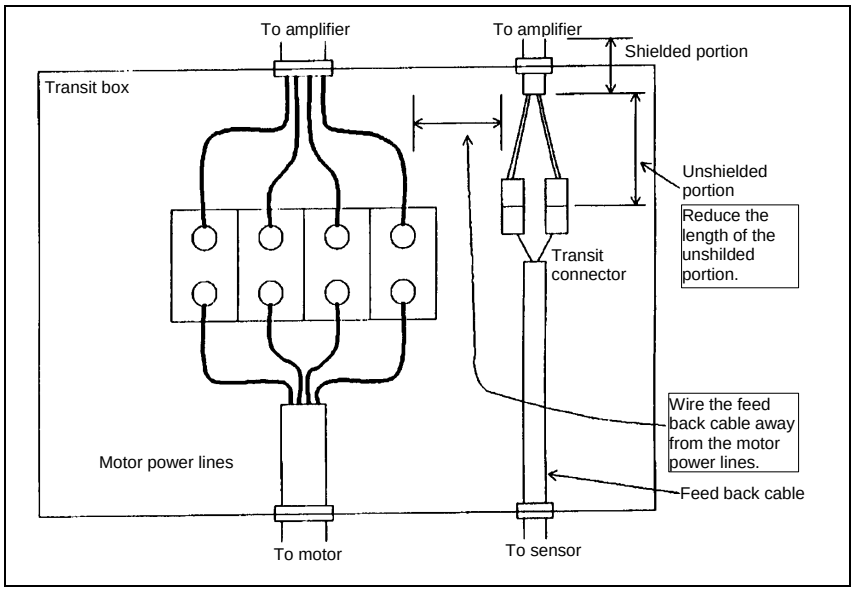

9.4 DETAILS OF CONNECTORS

9.4.1 20-Pin Half-Pitch Connectors

The following table lists the 20-pin half-pitch connectors used for the αi series servo amplifier and the recommended cables for these connectors.
Use connectors that match the recommended cables specified on the applicable connection diagram in detail.

Recommended-cable specification	Applicable connector	Connector model number	Housing model number	Connector + housing
A66L-0001-0284#10P	Crimp type	Hirose Electric Co., Ltd. FI30-20S	Sideways cable slot type FI-20-CVS2	Sideways cable slot type FI30-20S-CVS2
		Honda Tsushin Kogyo Co., Ltd. PCR-E20FA	PCR-V20LA	
	Soldering type	Hirose Electric Co., Ltd. FI40B-20S	Sideways cable slot type FI-20-CVS2	Sideways cable slot type FI40B-20S-CVS2
		Honda Tsushin Kogyo Co., Ltd. PCR-E20FS	PCR-V20LA	
A66L-0001-0286 A66L-0001-0460 A66L-0001-0462 A66L-0001-0481 A66L-0001-0491	Soldering type Note that this connector does not have pin No. 11, 13, 15, 17, or 19.	Hirose Electric Co., Ltd. FI40B-2015S	Sideways cable slot type FI-2015-CVS	Sideways cable slot type FI40B-2015S-CVS
A66L-0001-0368	Soldering type	Hirose Electric Co., Ltd. FI40B-20S	Sideways cable slot type FI-20-CVS5	Sideways cable slot type FI40B-20S-CVS5

9.4.2 Tyco Electronics AMP D-5000 Series Connector

The αi series uses the D-5000 series connector (manufactured by Tyco Electronics AMP) for the motor power cable.
The connector is provided with three keys that assure it is inserted in the correct direction. In addition, four types of receptacle contacts are available, from which the user can select the suitable one depending on the amount of current to use (size of the conductor).
Connectors and tools can be ordered directly from Tyco Electronics AMP. FANUC also furnishes options. For details, see Subsection 3.1.3.5, "Connectors."

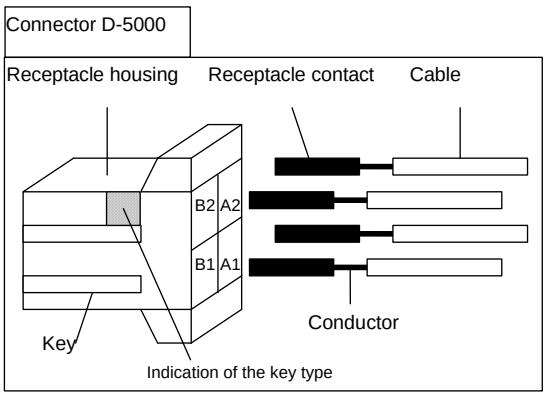

Receptacle housing

There are three different key types for the receptacle housing. Be sure to select the receptacle housing of the key type that matches the servo axis you use.

Receptacle housing model number	Specification of the key	Applicable servo amplifier
1-917807-2	XX	αi PS 5.5, αi SP2.2, αi SP 5.5, αi SV 1-axis, αi SV 2-axis (L), αi SV 3-axis(L)
3-917807-2	XY	αi SV 2-axis (M), αi SV 3-axis (M)
2-917807-2	YY	αi SV 3-axis (N)

(Reference)

There is a cable-end connectors which are inserted no matter what key is used. Contact the connector manufacturer (Tyco Electronics AMP) for details.

Receptacle contact

Four receptacle contact types are available, so as to support different conductor diameters. Be sure to select the receptacle contact (silver plating) that matches the servo axis you use.

Rectangle contact model number		Conductor size (mm^2)	Conductor size AWG	Insulation outer diameter (mm)	Manual tool model number
SS size	1318986-6	0.50 – 1.42	20/18	1.08-3.23	1366656-1
S size	316040-6	1.23 – 2.27	16/14	3.0-3.8	234170-1
M size	316041-6	3.08 – 5.50	12/10	4.0-5.2	234171-1
L size	1318697-6	7.27 – 8.92	8	4.9-7.8	1366044-1

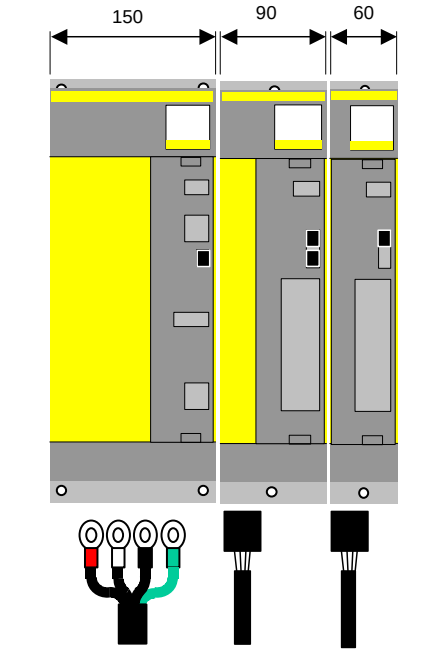

Applied	Connector key
αi PS 5.5 αi SP 2.2 αi SP 5.5 αi SV1 αi SV2(L-axis) αi SV3(L-axis)	XX 1-917807-2
αi SV 2 (M-axis) αi SV 3 (M-axis)	XY 3-917807-2
αi SV 3 (N-axis)	YY 2-917807-2

Contact
SS 1318986-6
S 316040-6
M 316041-6
L 1318697-6

10 SPINDLE-RELATED OPTIONS

Chapter 10, "SPINDLE-RELATED OPTIONS", consists of the following sections:

10.1 SPINDLE ORIENTATION.....305
10.2 POWER LINE SWITCH CIRCUIT.....306
10.3 SUB MODULE SW 316
10.4 SUB MODULE SM.....323

10.1 SPINDLE ORIENTATION

Sensor

Sensor	Description
αi position coder	Connected to the spindle on a 1:1 basis (directly connected by using a gear or timing belt)
αi position coder S	Connected to the spindle on a 1:1 basis (directly connected by using a gear or timing belt)
αi MZ sensor αi BZ sensor αi CZ sensor	Directly connected to the spindle on a 1:1 basis
αi M sensor + Proximity switch	Installed on the spindle. The motor is connected with the spindle by using a gear.

Detection unit and repetitive positioning precision

Sensor	Number of feedback signals	Detection unit	Repetitive positioning precision(NOTE)
αi position coder	1024p/rev	0.088°	±0.2°
αi position coder S	1024λ/rev	0.088°	±0.2°
αi MZ sensor, αi BZ sensor	128λ/rev to 512λ/rev	0.088°	±0.2°
αi CZ sensor		0.088°	±0.2°
αi M sensor + proximity switch	128λ/rev to 512λ/rev	0.088°	±0.2° When the gear ratio is 1:1. An error due to gear backlash is excluded.

NOTE
1 The error factors on the machine side are excluded.
2 With the αi M sensor plus proximity switch method, stop position control is exercised using the αi M sensor built into the motor, with the proximity switch installed on the spindle used as the reference. So, pay attention to the following mechanical error factors:
- When the gear ratio is higher than 1:1 (on the spindle acceleration side), repetitive positioning precision decreases.
- The stop position can move by a gear backlash.

10.2 POWER LINE SWITCH CIRCUIT

10.2.1 Overview

The power line switch circuit is installed between an αi SP and spindle motor to exercise spindle switch control and output switch control.

(1) Power switching from one motor to another (spindle switch control)
(2) Power line switching between the two different windings of a motor (output switch control)

A power line switch unit for performing power line switching is available.
A switch circuit can also be configured by using magnetic contactors and a relay.

10.2.2 Switch Circuit Configuration

The switch circuit is configured as follows:

- The diagram given below shows connections of the coils of magnetic contactors.
- For the PMC sequence, refer to Section 5.1, "Output Switch Control", or Section 5.2, "Spindle Switch Control", in Chapter 5, "Function Description", in "FANUC AC SPINDLE MOTOR αi Series Parameter Manual" (B-65280EN).
- For the connection of the main contacts in output switch control, refer to the relevant spindle motor descriptions.
- Select magnetic contactors so that the rated contact current of the main contacts is at least the short-time rated current of the spindle motor.

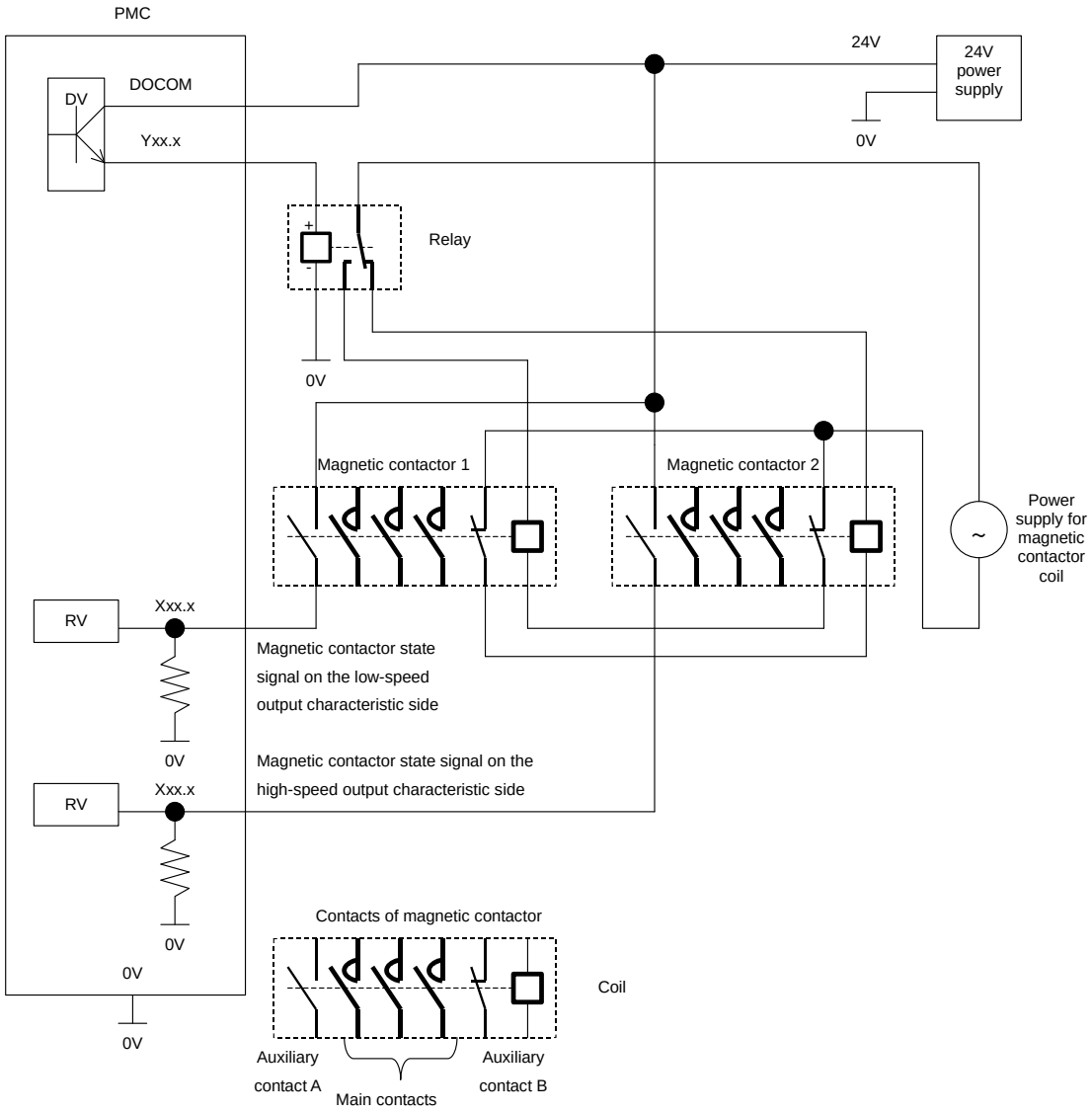
PMC
DV
DOCOM
Yxx.x
24V
24V power supply
0V
Relay
0V
Magnetic contactor 1
Magnetic contactor 2
Power supply for magnetic contactor coil
RV
Xxx.x
Magnetic contactor state signal on the low-speed output characteristic side
0V
Magnetic contactor state signal on the high-speed output characteristic side
RV
Xxx.x
0V
0V
0V
Contacts of magnetic contactor
Coil
Auxiliary contact A
Main contacts
Auxiliary contact B

10.2.3 Power Line Switch Unit

10.2.3.1 Specification

Ordering specification drawing number	A06B-6078-K034 (Y/Y connection) A06B-6078-K035 (Y/Δ connection)	A06B-6078-K036 (Y/Y connection) A06B-6078-K037 (Y/Δ connection)
Magnetic contactor specification	A58L-0001-0306 Fuji Electric (SC-3N)	A58L-0001-0312 Fuji Electric (SC-6N)
Rated operating current *1	200-240V: 65A 400-440V: 65A 440-480V: 60A	200-240V: 125A 400-440V: 110A 440-480V: 90A
Rating of operating electromagnetic coil	200V/220V 15% to +10% 50/60Hz ±1Hz	
Relay specification	A58L-0001-0307 OMRON (type LY2-D)	
Rated voltage	24V ±10%	
Rated current	36.9mA	

*1 Select a power line switch unit so that the peak rated current of the spindle motor used is equal to or less than this value.

10.2.4 Outside and Mounting Dimension Diagrams

Outside and mounting dimension diagrams of the switch unit for spindle switch control and output switch control (Y/Y connection)

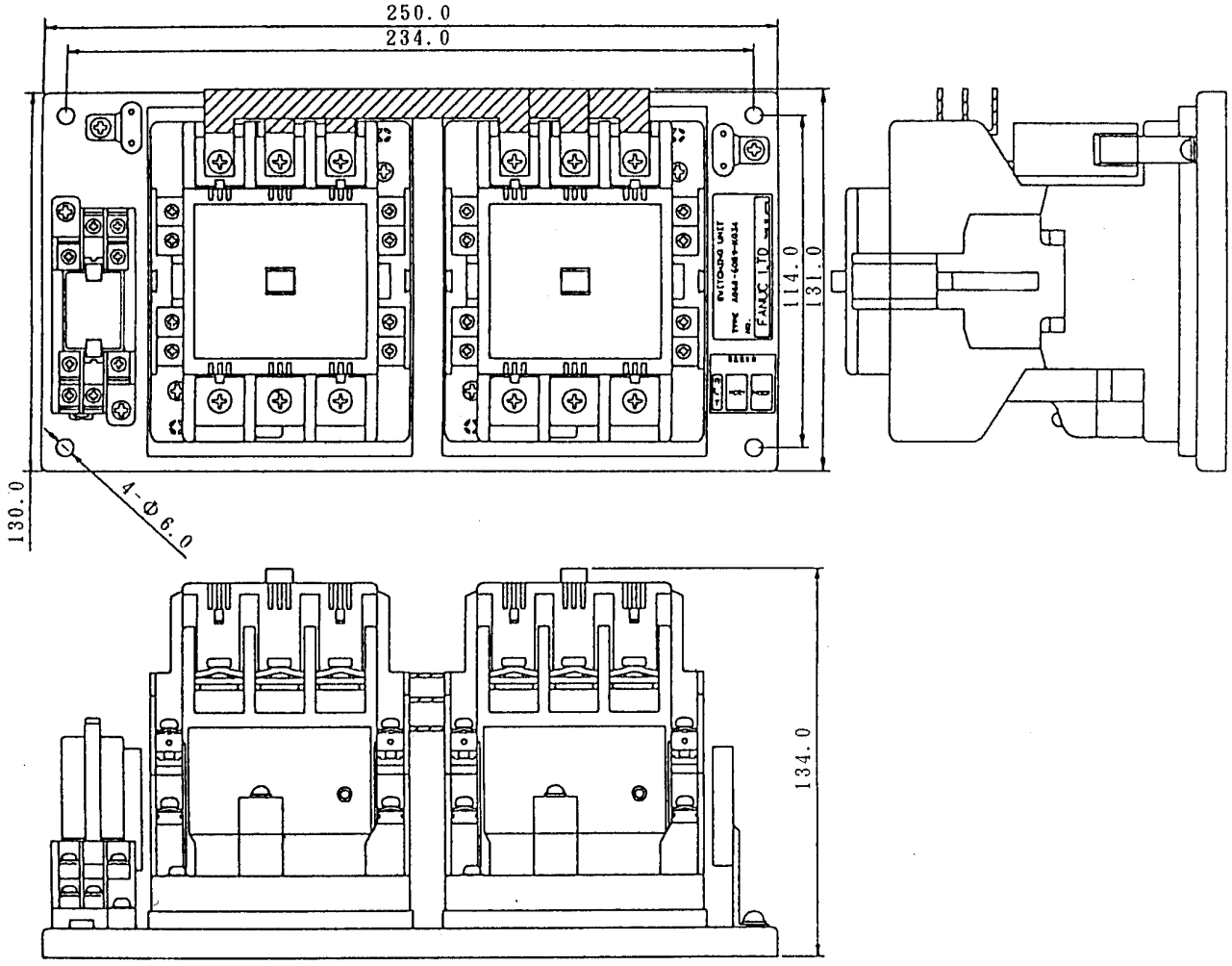

A06B-6078-K034

Fig. A

Mounting diagram

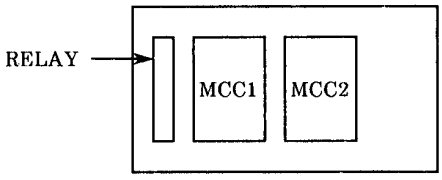

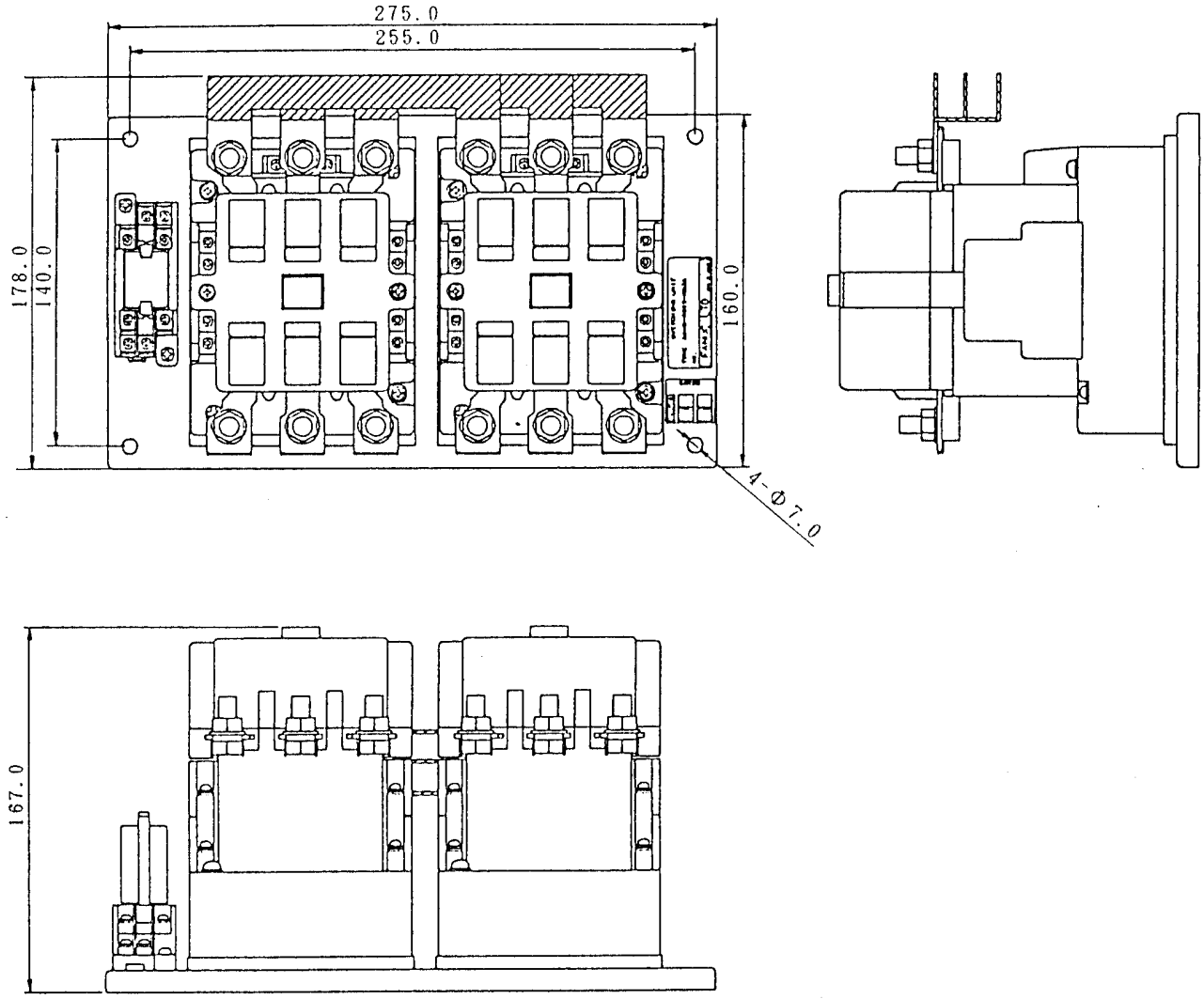

A06B-6078-K036

Fig. B

Mounting diagram

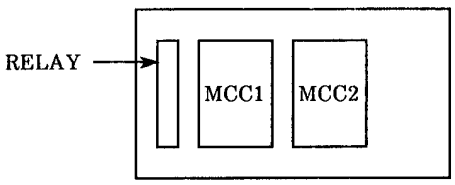

Outside and mounting dimension diagrams of the switch unit for output switch control (Y/Δ connection)

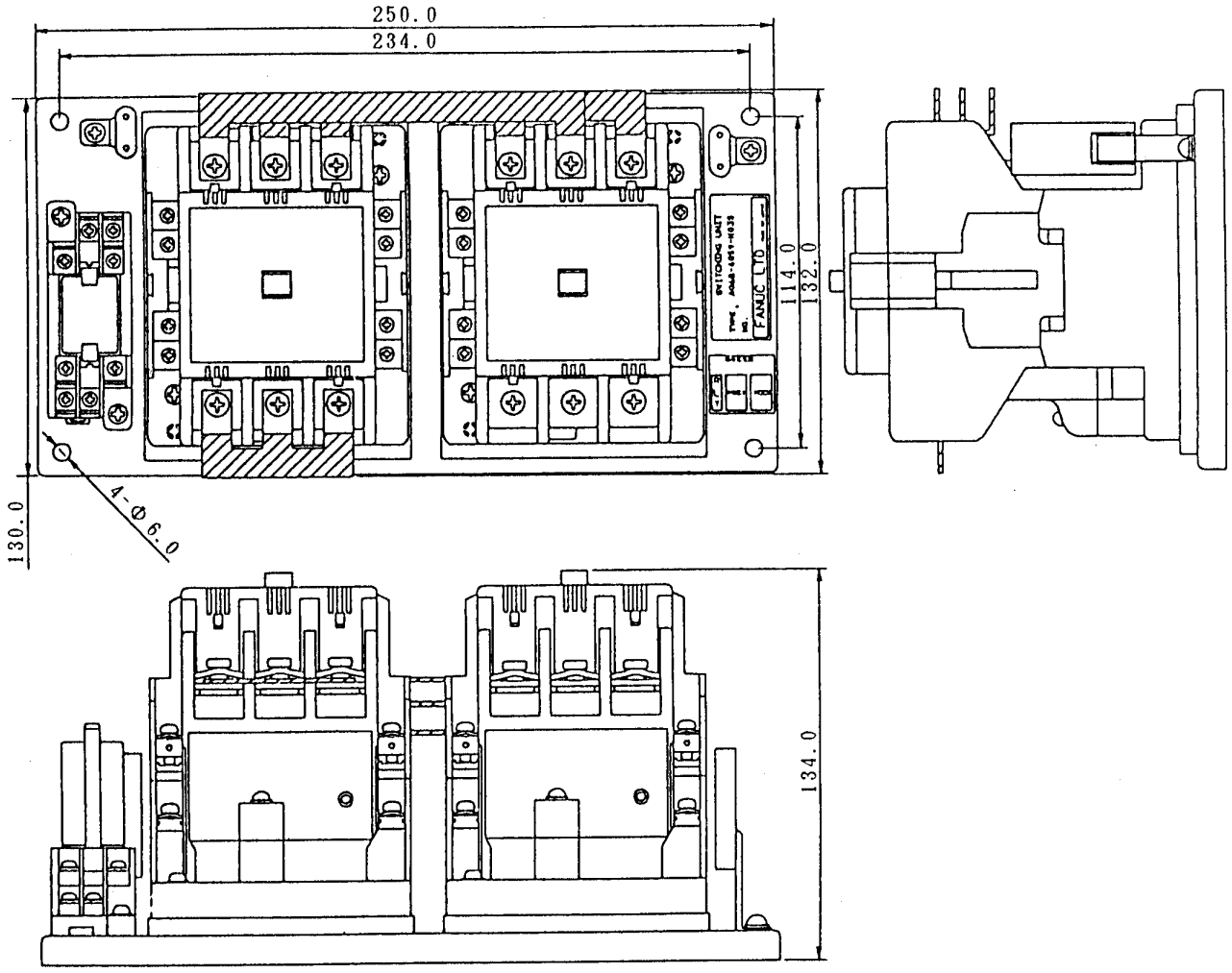

A06B-6078-K035

Fig. A

Mounting diagram

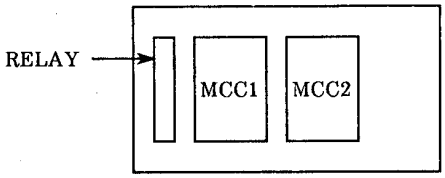

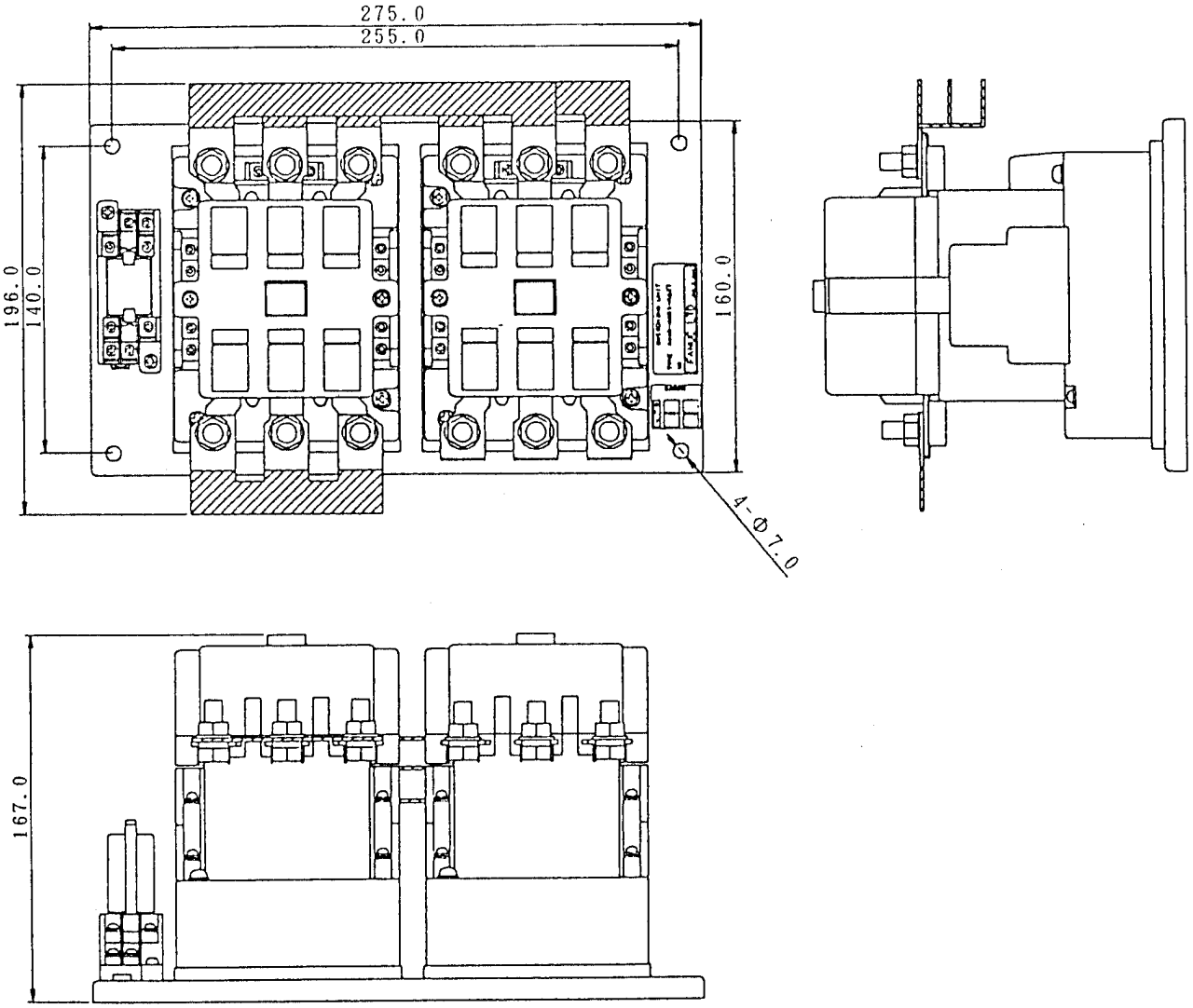

A06B-6078-K037

Fig. B

Mounting diagram

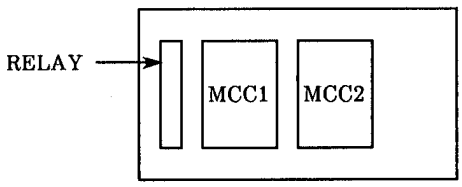

10.2.5 Connection

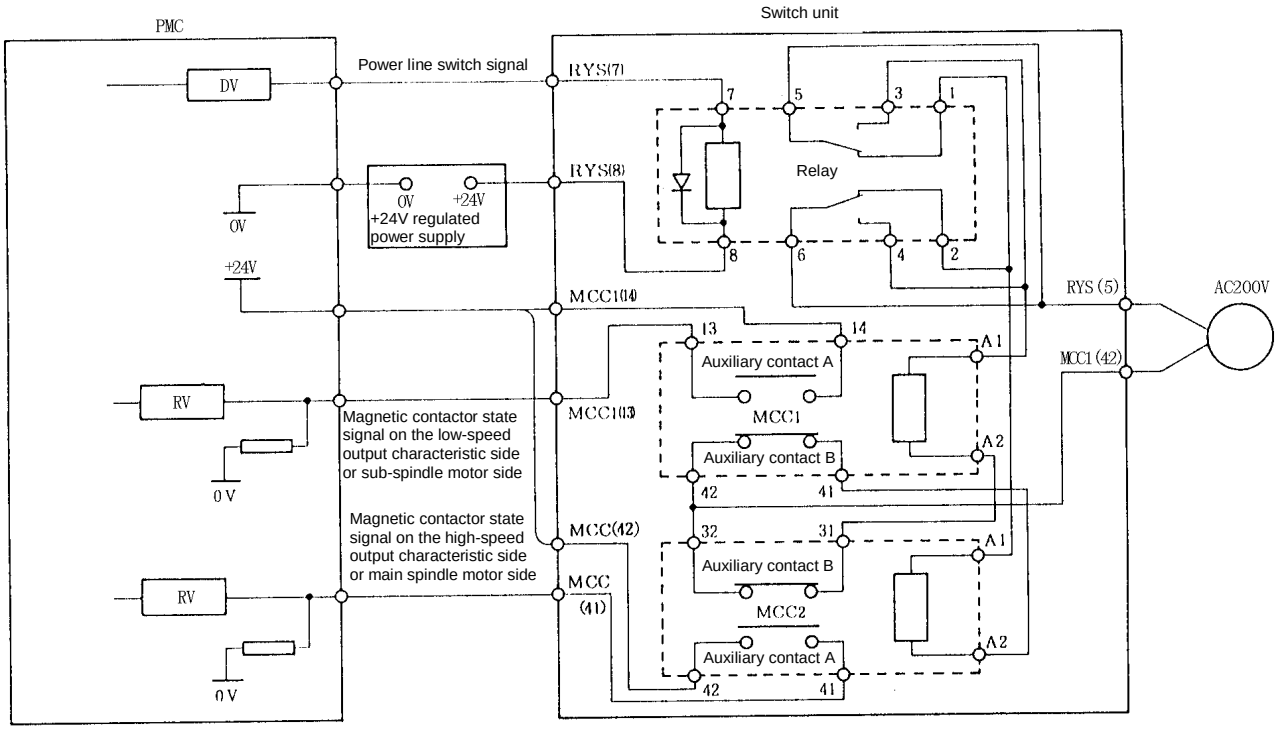

NOTE

Make a connection to the switch unit by direct screwing on the screw terminal of the magnetic contactor and relay socket.

10.2.6 Notes

(1) Install the switch unit under the same conditions as for the αi SP.
Installation conditions
- Ambient temperature
  Ambient temperature of the unit :
  0 to 55°C (at operation)
  0 to 45°C (at keeping and transportation)
- Humidity
  Normally 90% RH or below, and condensation-free
- Vibration
  In operation : Below 0.5G
- Atmosphere
  No corrosive or conductive mists or drops should deposit directly on the electronic circuits.

(2) The figure below shows the standard method of installation. However, the switch unit may be tilted up to 15 degrees toward the right or left.

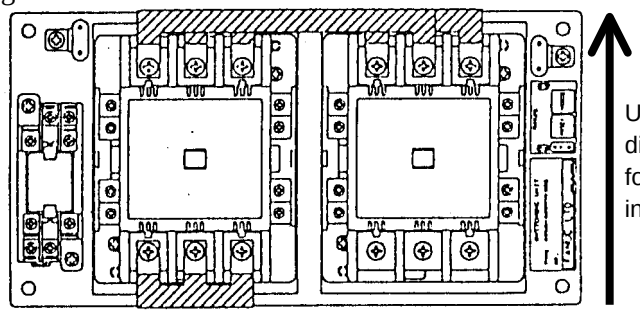

(3) The switch unit may need to be installed horizontally from a viewpoint of cabling or installation (Fig. 11.7.6(b)). In this case, however, the characteristics of the magnetic contactor remain almost the same, but the mechanical life and open/close frequency decrease.

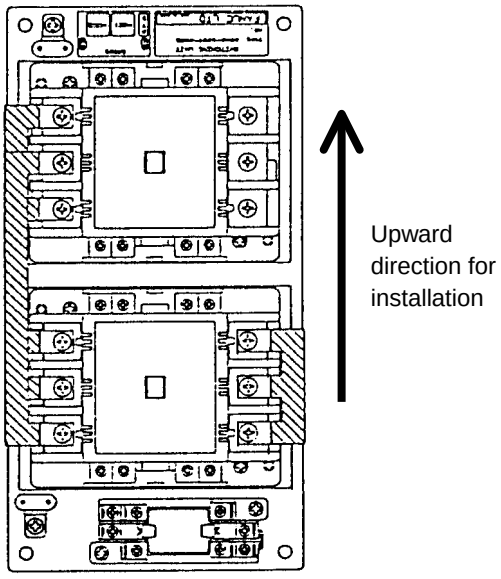

(4) Provide an arc space as shown below.

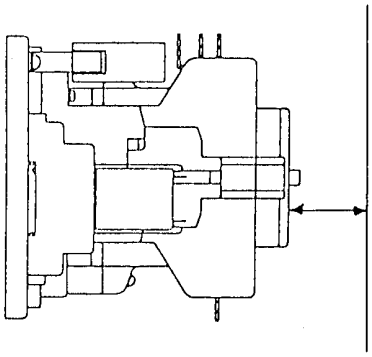

(5) If the main magnetic contactor unit is installed incorrectly or incompletely, the contact can make an abrupt movement due to a shock upon power-up, or its life can be adversely affected. Moreover, if the electric cable to be connected is not tightened sufficiently, an overheat can occur or the electric cable can come off, resulting in a major accident.

(a) Tightening torque

(i) Magnetic contactor

Location	Tightening torque [kg·cm]	
	A06B-6078-K034 A06B-6078-K035	**A06B-6078-K036 A06B-6078-K037**
MCC main terminal	62.0 (M6.0)	84.0 (M8.0)
MCC auxiliary terminal	14.0 (M3.5)	14.0 (M3.5)

(ii) Relay socket

Location	Tightening torque [kg·cm]
Relay socket	14.0 (M3.5)

10.3 SUB MODULE SW

The sub module SW is 60 mm wide. By being combined with αi SP TYPE A or αi SP TYPE B according to a required function, the sub module SW is used for the spindle switch function to switch between two motors (main and sub) with one spindle amplifier module.

- A cable for connecting the SW module with the αi SP needs to be prepared.
- A metal plate for mounting needs to be prepared.

For the drawing numbers of the sub module SW and connection cable kit, see Chapter 3.

10.3.1 Configuration

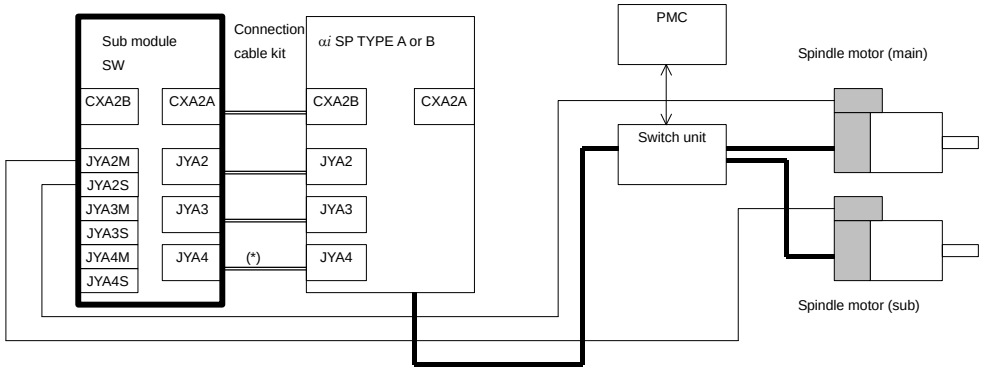

(*) Only when the sub module SW is combined with αi SP TYPE B

10.3.2 Specification

By combining the sub module SW with αi SP TYPE A or αi SP TYPE B, the spindle switch function for switching between two motors (main and sub) with one spindle amplifier module can be used. The table below indicates allowable combinations of detectors and functions on the main and sub sides of spindle switch control. If the main or sub side of spindle switch control includes a function that requires αi SP TYPE B (organization number 6 or 7 indicated below), select TYPE B as an αi SP to be combined with the sub module SW.

			Organization on main or sub side							Remarks
			1	2	3	4	5	6	7	
αi SP to be combined with sub module SW		αi SP TYPE A	○	○	○	○	○			
		αi SP TYPE B	○	○	○	○	○	○	○	
Spindle system configuration	Sensor on the motor	αi M sensor	○			○	○	○	○	
		αi MZ sensor		○						
		αi BZ sensor (when a built-in motor is used) (*10)			○					
	Sensor on the spindle	αi position coder				○				*3
		External 1-rotation					○			*3
		αi BZ sensor						○		*3
		αi position coder S							○	*3
Function	Rigid tapping		○*1	○*2	○	○	○*2	○	○	
	Orientation by a position coder			○*6	○	○		○	○	*4
	Orientation by the external one-rotation signal						○*2			*7
	Spindle synchronization	Velocity synchronization	○*2	○*6	○	○	○*2	○	○	*5
		Phase synchronization		○*6	○	○	○*9	○	○	*5
	Threading			○*6	○	○		○	○	
	Cs-axis contour control			○*6	○			○	○	*5

*1 The spindle and motor must be interconnected with a timing belt or gear. No orientation is available to adjust the tapping start position.
*2 The spindle and motor must be interconnected with a timing belt or gear.
*3 The spindle and detector must be interconnected in one-to-one connection mode.
*4 Orientation of external stop position setting type can be used on the main side only.
*5 Two motor amplifiers are required.
*6 Cs contour control can be used on the main side only.
*7 Note that the stop position moves by a backlash between the spindle and motor because of the theory of operation.
*8 The spindle and motor must be interconnected directly or with a timing belt or gear in one-to-one connection mode.
*9 Before specifying spindle synchronization, perform orientation to detect the one-rotation signal (PC1DT=1).
*10 The αiCZ analog output type is also applicable.

Other notes

Up to two stages of parameter gear switching can be set on the sub side.

With the Power Mate, only Model D and F can use spindle switch control.

10.3.3 External Dimensions

Sub module SW

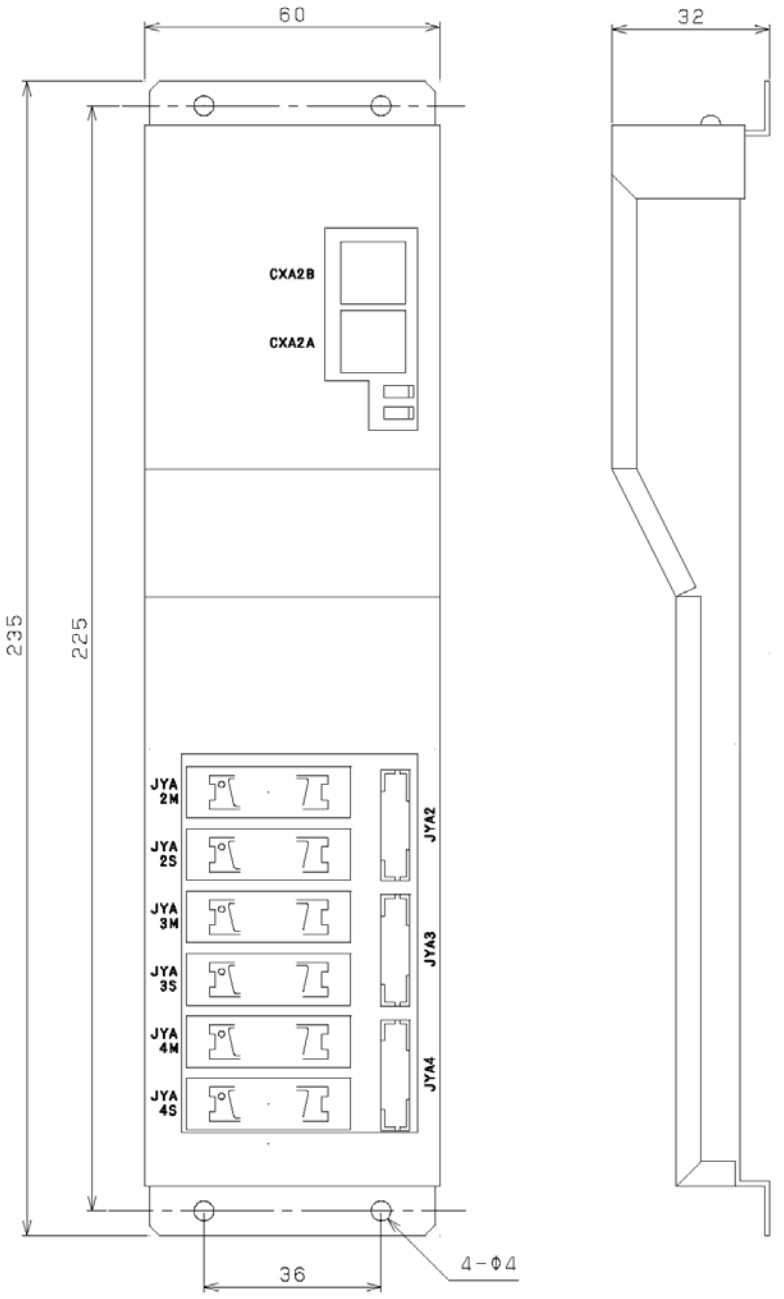

NOTE
A metal plate for mounting the sub module SW needs to be separately prepared.

Installation when the sub module SW is combined with an αi SP 15 (90 mm wide)

Prepare a metal plate for mounting the sub module SW. The dimensions of a metal plate for mounting the sub module SW are specified to avoid interference with the short bar of the DC link section.

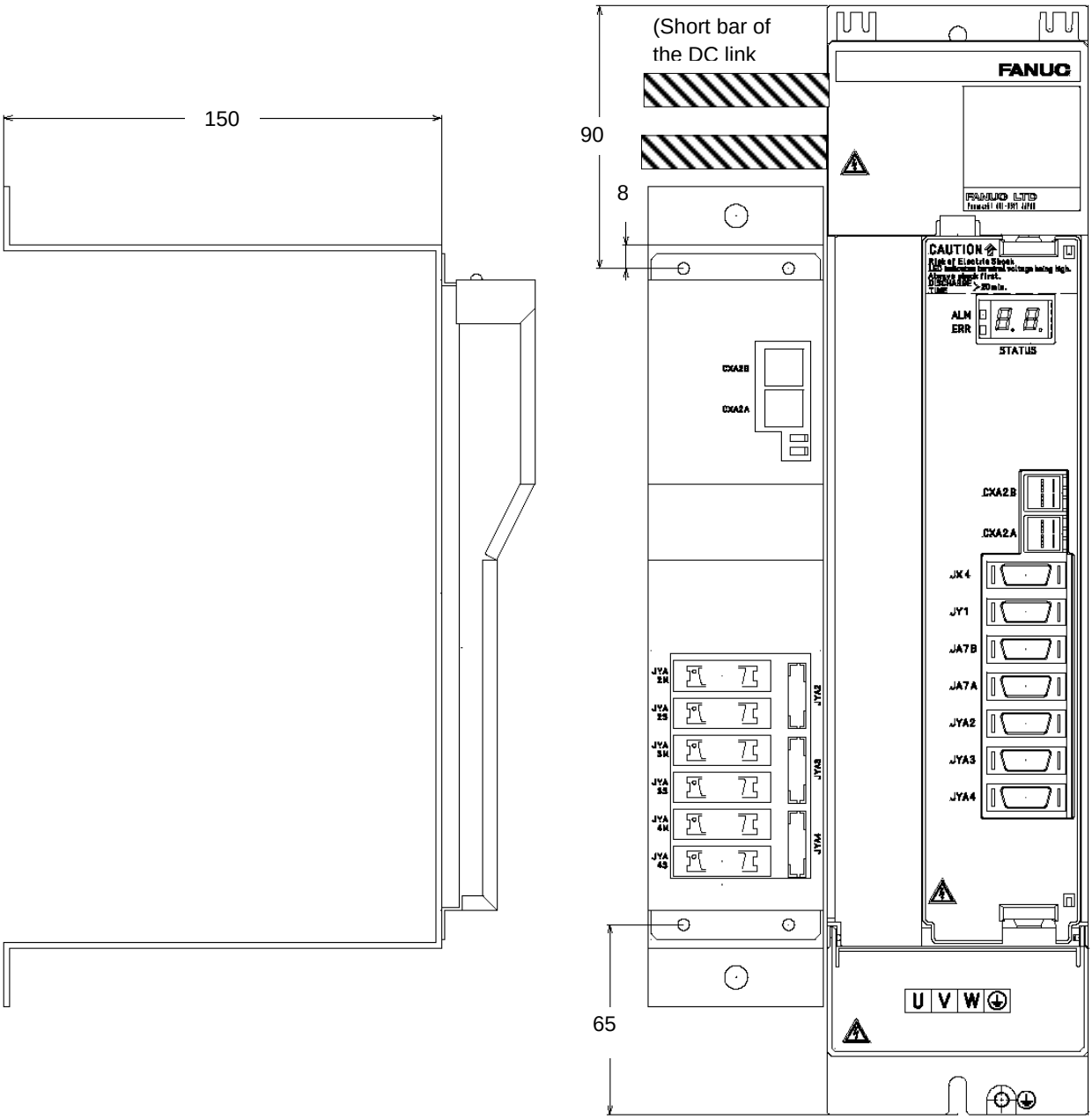

10.3.4 Connector Installation Diagram (for Combination with αi SP 15)

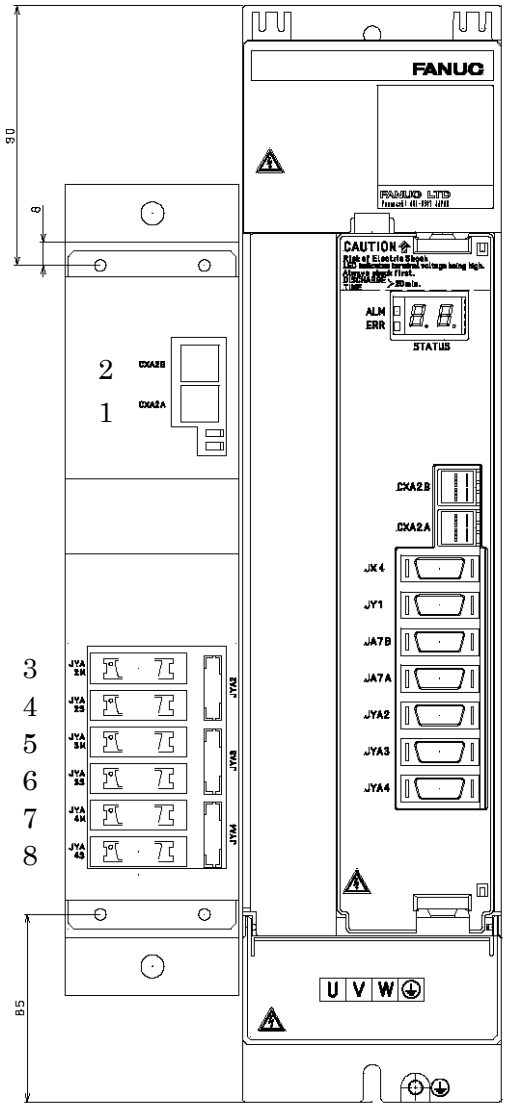

	Name	Indication
1	Connector for αi PS interface output	CXA2A
2	Connector for αi PS interface input	CXA2B
3	Connector (main side) for spindle sensor connection on motor side	JYA2M
4	Connector (sub side) for spindle sensor connection on motor side	JYA2S
5	Connector for position coder connection and external one-rotation signal connection (main side)	JYA3M
6	Connector for position coder connection and external one-rotation signal connection (sub side)	JYA3S
7	Connector for separate spindle sensor connection (main side)	JYA4M
8	Connector for separate spindle sensor connection	JYA4S

NOTE
Install Submodule SW on the right side of the αi SP when width of αi SP is 150mm or 300mm witdth.

10.3.5 Connection

Total connection diagram

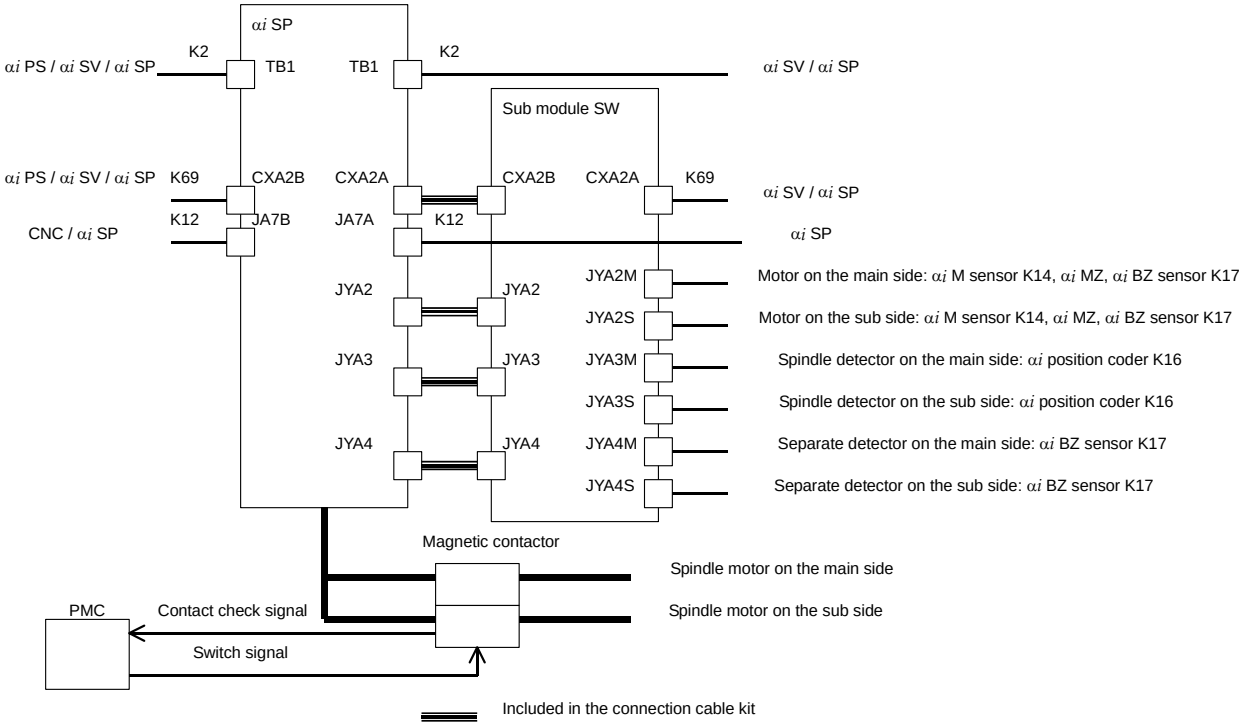

The αiCZ analog output type can be used in the same way as the α*i*BZ sensor.

For details of the connection cables other than the connection cable kit, see the items of relevant K numbers in Chapter 9.

For the drawing number of the connection cable kit, see Chapter 3.

10.4 SUB MODULE SM

When used with the αi SP TYPE B, the sub module SM is used to drive the synchronous built-in spindle motor B*i* S series.

Overall connection

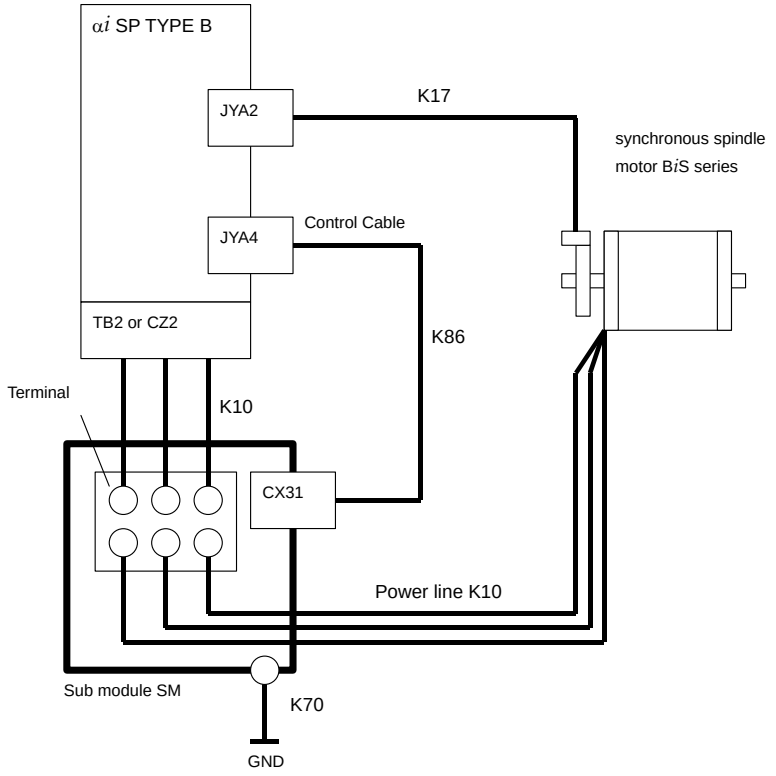

> ⚠ **WARNING**
> To ensure safety, avoid inserting switches to the power lines connected to the α*i*SP, sub module SM, and motor. If a switch connected to such a power line is turned off during motor rotation, overvoltage generated from the motor cannot be blocked, possibly damaging the motor and sub module SM.

10.4.1 Specifications

Model name	SSM-100	SSM-200
Short-circuit current	100Arms (within 120 sec)	200Arms (within 120 sec)
Rated input voltage	200 to 480VAC	
Applicable SPM	αi SP TYPE B Software series: 9D53 (#H553) edition B or later 9D70 (#H570) edition A or later 9D80 (#H580) edition A or later	
Weight	6kg	6.5kg
Power consumption (normal operation without alarm)	3W	6W

⚠ CAUTION
To latest αiSP series (A06B-6142-Hxxx#H580 and A06B-6152-Hxxx#H580), apply sub module SM unit edition B or later.

10.4.2 Outline Drawing

With the protective cover
Installed with two M4 screws

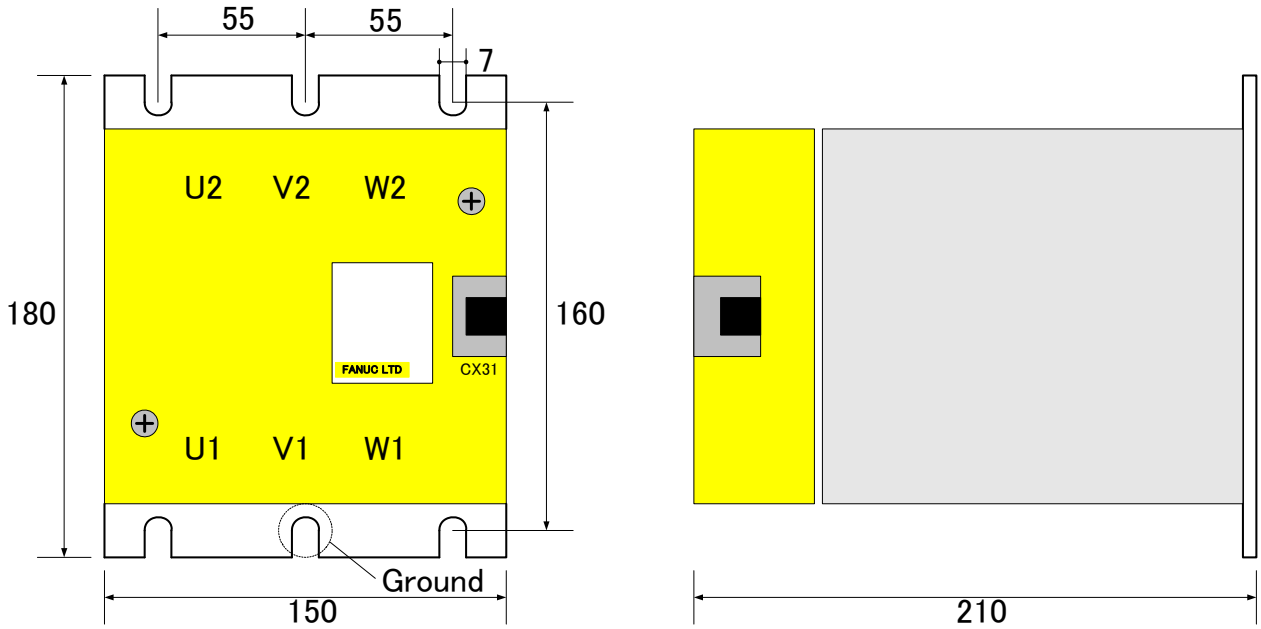

(Unit = mm)

Without the protective cover

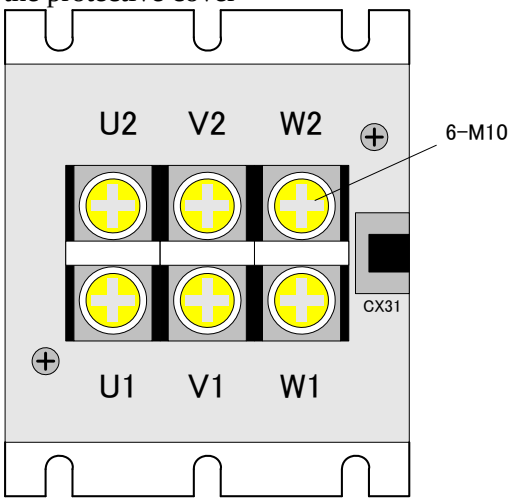

10.4.3 Panel Cut-out

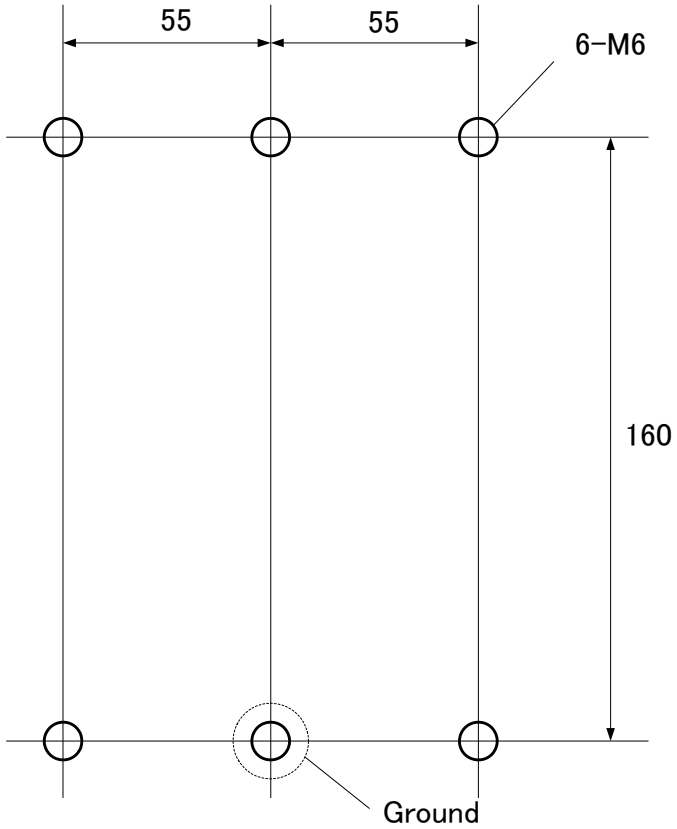

(Unit = mm)

10.4.4 Connection

Details of cables K10, K17, K70, and K86

For details of cables K10, K17, K70, and K86, see Subsection 9.2.3 and Appendix E in this manual.

11 SENSOR

Chapter 11, "SENSOR," consists of the following sections:

11.1 SENSOR FOR THE SERVO SYSTEM.....328
11.2 SENSOR FOR THE SPINDLE.....350

11.1 SENSOR FOR THE SERVO SYSTEM

11.1.1 Absolute αiCZ Sensor (Separate Sensor)

This manual describes the specifications and handling of the absolute αiCZ sensor for angular displacement detection.
This sensor can be used as a separate sensor when high-precision angular displacement detection is required as in the case of a round table configured as a full-closed system using a servo motor and worm gear. This sensor differs from the similar sensor models, namely, αiCZ sensors 512A, 768A, and 1024A (used with the DiS serial synchronous built-in servo motor) in that this sensor does not have circuitry for processing temperature information and an overheat alarm and therefore requires no thermistor or thermostat connection.
For this sensor, the FANUC serial interface is used. This sensor can be directly connected to the separate sensor interface unit.

Names and specification numbers

Names and specification numbers

Name	Specification number	Remarks	
		Number of teeth	Maximum speed
αiCZ sensor 512AS	A860-2164-T411	512	1200min^{-1}
αiCZ sensor 768AS	A860-2164-T511	768	800min^{-1}
αiCZ sensor 1024AS	A860-2164-T611	1024	600min^{-1}

Absolute maximum ratings

Absolute maximum ratings (applicable to all specifications)

Item	Specification
Power supply voltage	-0.5 V to +6.0 V
Operating temperature range	0℃ to +70℃
Humidity	95%RH or less

11.1.1.1 Specifications

αiCZ sensor 512AS
Mechanical and electrical specifications

Item	Min.	Typ.	Max.	Unit
Speed			1200	min^{-1}
Resolution		1/3,600,000		Revolution
Precision		±4		Second
Repetition precision		±1		Second
Power supply voltage	4.5	5	5.25	V
Current consumption		150		mA
Current consumption at battery backup time (NOTE)		300		μA
Water and dust proof class		IP67		

NOTE
1 The current consumption at battery backup time is about three times larger than that of the αi pulse coder. So, it is recommended to use four alkaline cells (size D).
2 Use a battery case (A06B-6050-K060) and four alkaline cells (A06B-6050-K061). Commercially available size D alkaline cells may be used.

Dimensions
αiCZ sensor 512AS
A860-2164-T411

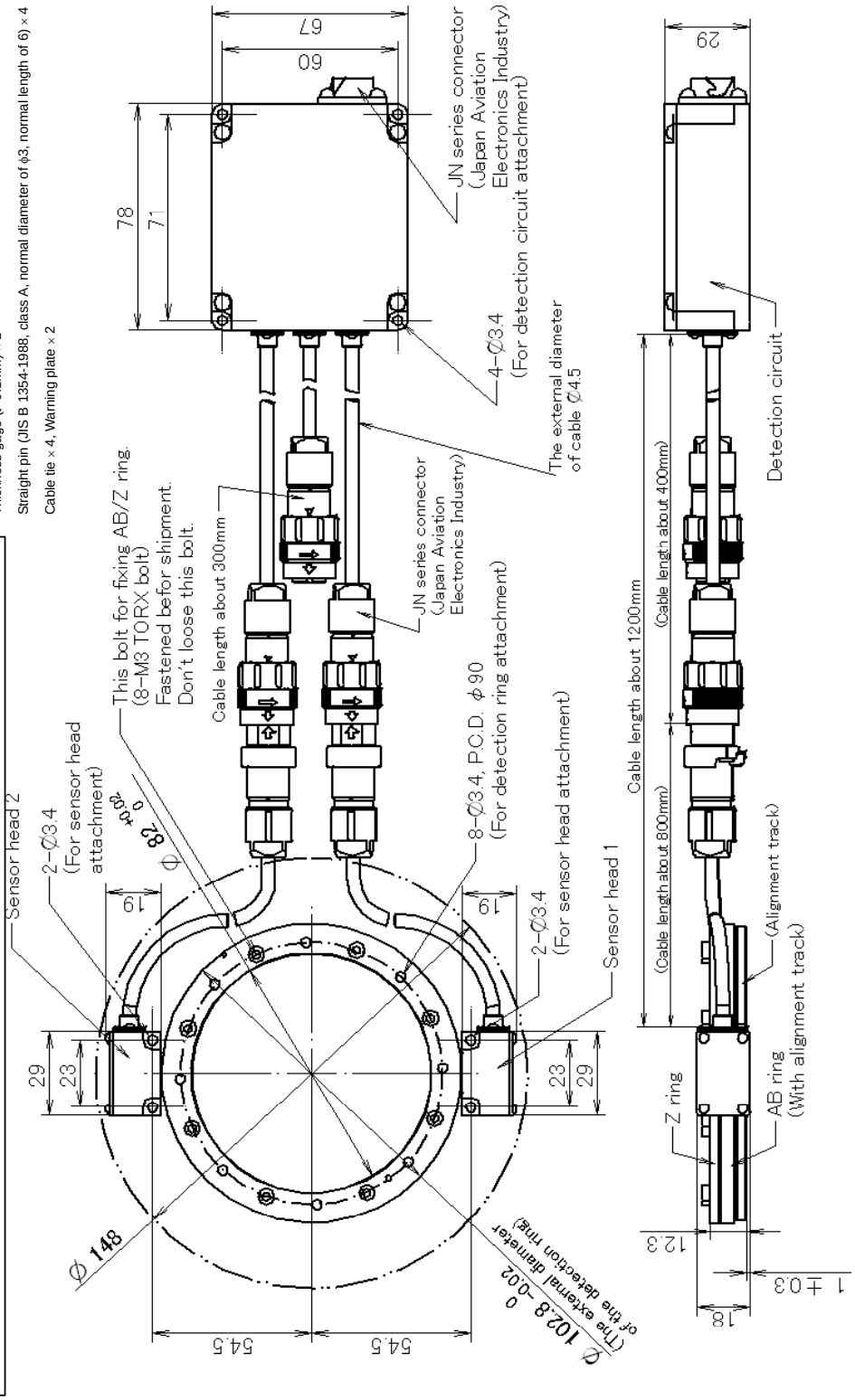

- The sensor is a precision part. Use special care in handling. Particularly, do not apply external force to the sensor heads.
- Take dust protection measures to prevent foreign matter such as chips from being attached to the sensor.
- The waterproof class of the αiCZ sensor is equivalent to IP67. However, if the sensor is continuously exposed to coolant, for example, the sensor can fail. Provide highest-level water protection to prevent the sensor from being exposed to coolant or the like.
- For easy maintenance, mount the sensor at a position where it can be replaced easily.
- Ensure that no vibration greater than 1 G is applied to the sensor circuit.
- Ground the sensor circuit. The bottom of the sensor circuit is not painted. So, the circuit can be grounded only by screwing.
- Fasten the cables to the machine near the sensor heads so that no load is applied directly to the sensor heads.
- All αiCZ sensor cables are of movable type.

αiCZ sensor 768AS
Speed, resolution, precision, and electrical specifications

Item	Min.	Typ.	Max.	Unit
Speed			800	min^{-1}
Resolution		1/3,600,000		Revolution
Precision		±3		Second
Repetition precision		±1		Second
Power supply voltage	4.5	5	5.25	V
Current consumption		150		mA
Current consumption at battery backup time (NOTE)		300		μA
Water and dust proof class		IP67		

NOTE
1 The current consumption at battery backup time is about three times larger than that of the αi pulse coder. So, it is recommended to use four alkaline cells (size D).
2 Use a battery case (A06B-6050-K060) and four alkaline cells (A06B-6050-K061). Commercially available size D alkaline cells may be used.

Dimensions
αiCZ sensor 768AS
A860-2164-T511

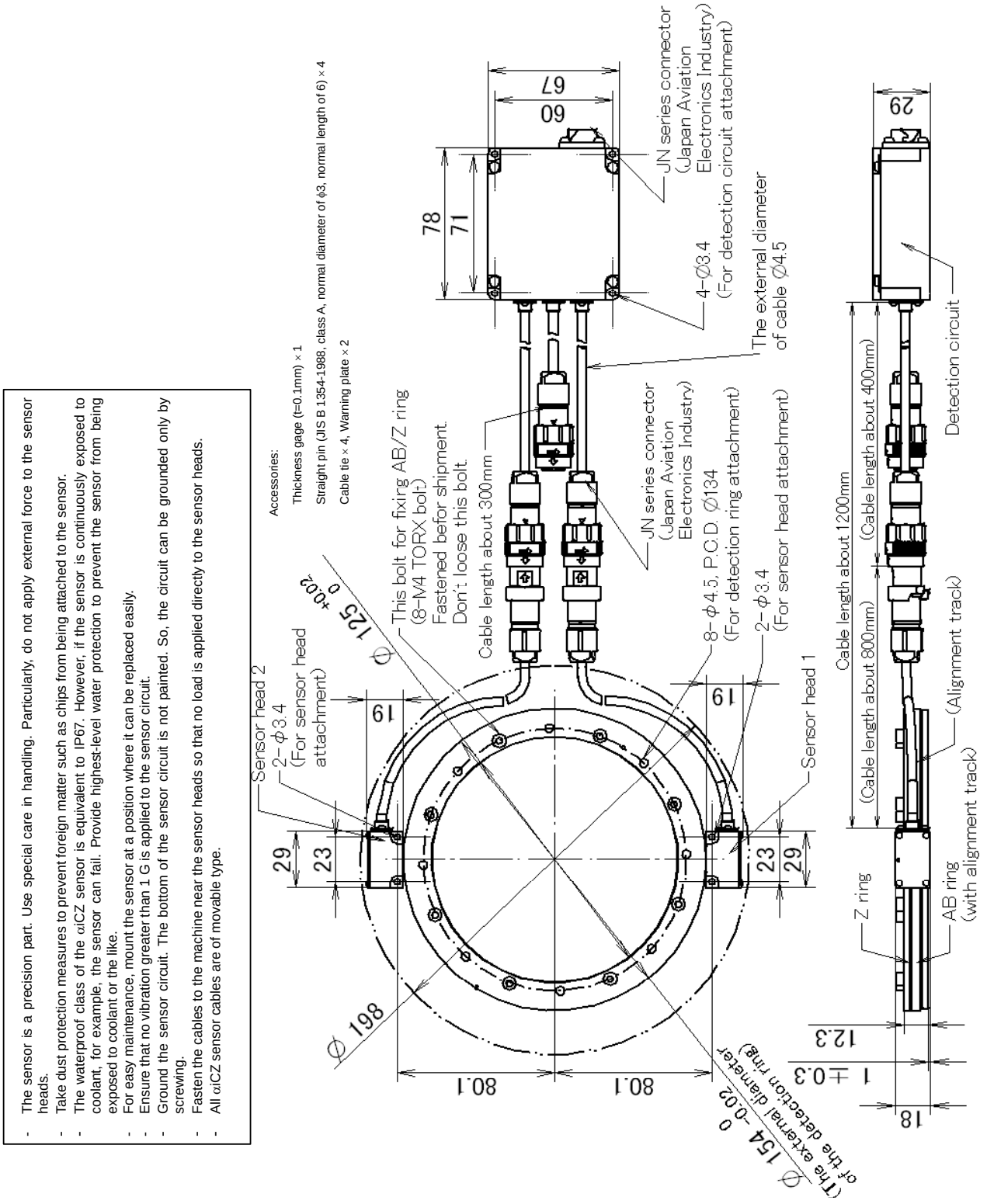

αiCZ sensor 1024AS
Speed, resolution, precision, and electrical specifications

Item	Min.	Typ.	Max.	Unit
Speed			600	min^{-1}
Resolution		1/3,600,000		Revolution
Precision		±2		Second
Repetition precision		±1		Second
Power supply voltage	4.5	5	5.25	V
Current consumption		150		mA
Current consumption at battery backup time (NOTE)		300		μA
Water and dust proof class				

NOTE
1 The current consumption at battery backup time is about three times larger than that of the αi pulse coder. So, it is recommended to use four alkaline cells (size D).
2 Use a battery case (A06B-6050-K060) and four alkaline cells (A06B-6050-K061). Commercially available size D alkaline cells may be used.

Dimensions
αiCZ sensor 1024AS
A860-2164-T611

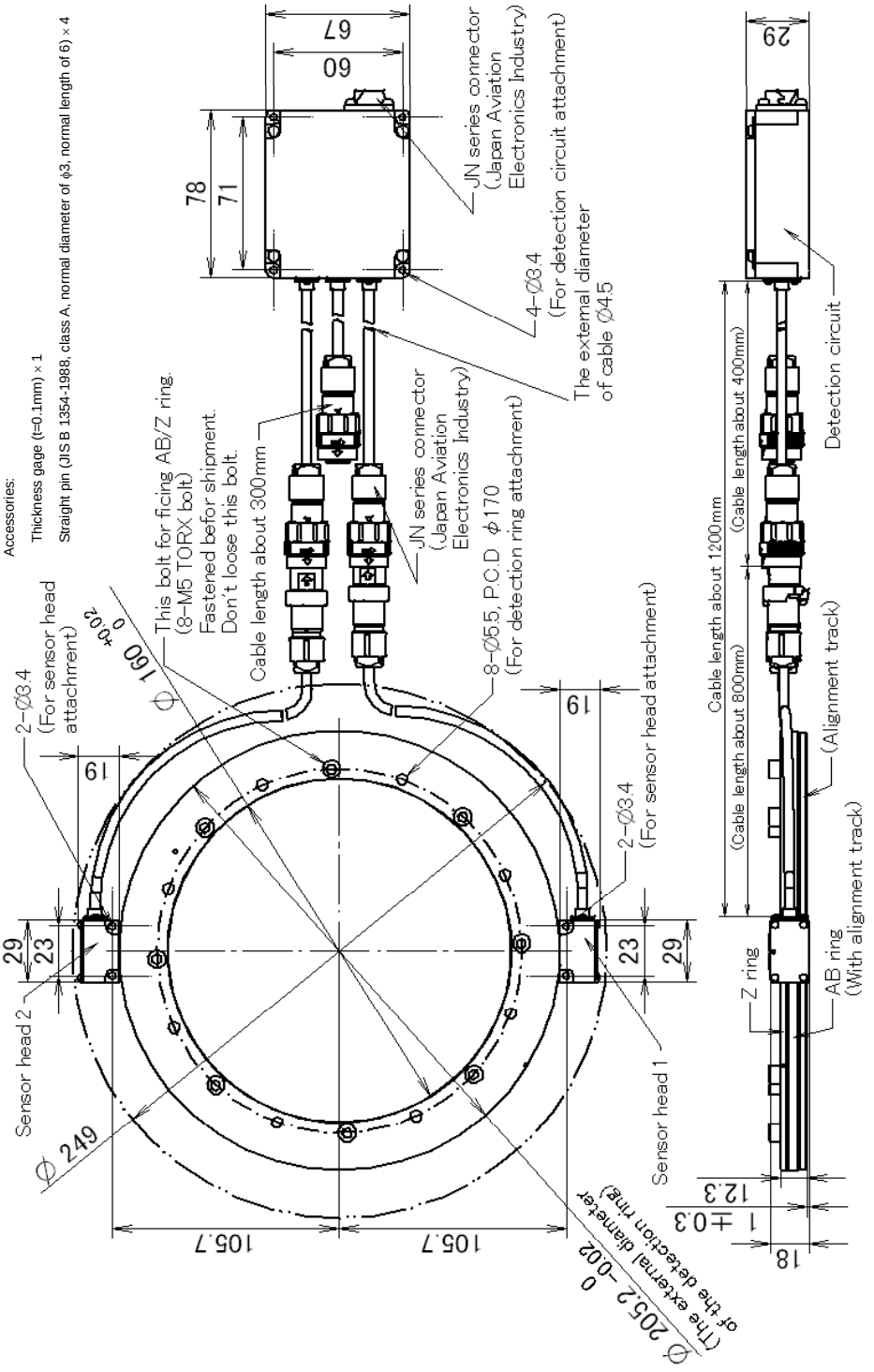

- The sensor is a precision part. Use special care in handling. Particularly, do not apply external force to the sensor heads.
- Take dust protection measures to prevent foreign matter such as chips from being attached to the sensor.
- The waterproof class of the αiCZ sensor is equivalent to IP67. However, if the sensor is continuously exposed to coolant, for example, the sensor can fail. Provide highest-level water protection to prevent the sensor from being exposed to coolant or the like.
- For easy maintenance, mount the sensor at a position where it can be replaced easily.
- Ensure that no vibration greater than 1 G is applied to the sensor circuit.
- Ground the sensor circuit. The bottom of the sensor circuit is not painted. So, the circuit can be grounded only by screwing.
- Fasten the cables to the machine near the sensor heads so that no load is applied directly to the sensor heads.
- All αiCZ sensor cables are of movable type.

11.1.1.2 Connection block diagram (common to three models)

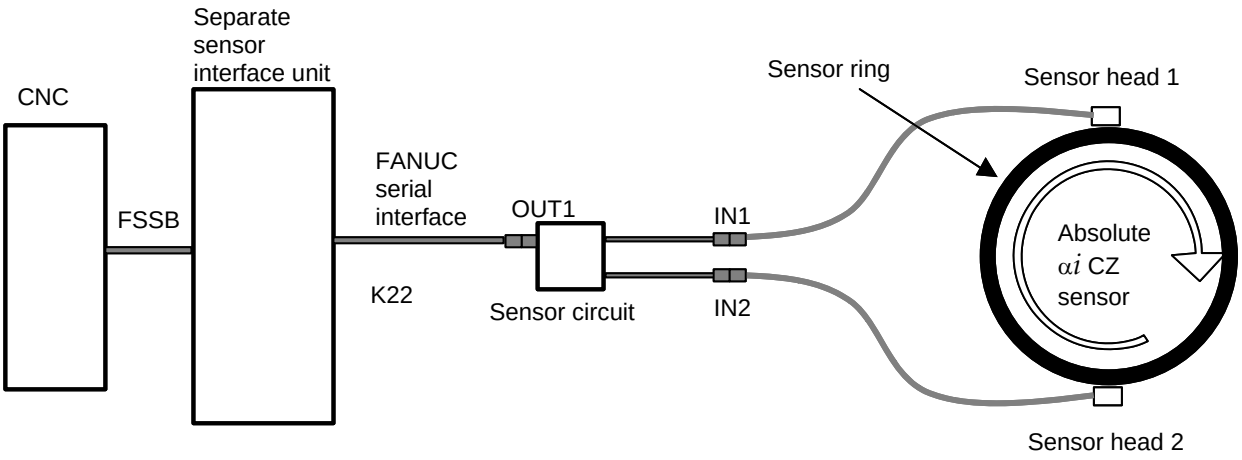

11.1.1.3 Connection specifications

Cable K22

See Subsection 9.3.2.

Method of extending the sensor cables

The sensor cables from the sensor heads to the sensor circuit can be extended up to 4 m as shown in Fig. 11.1.1.3.
The method of extending the sensor cables is described below.

Connection block diagram

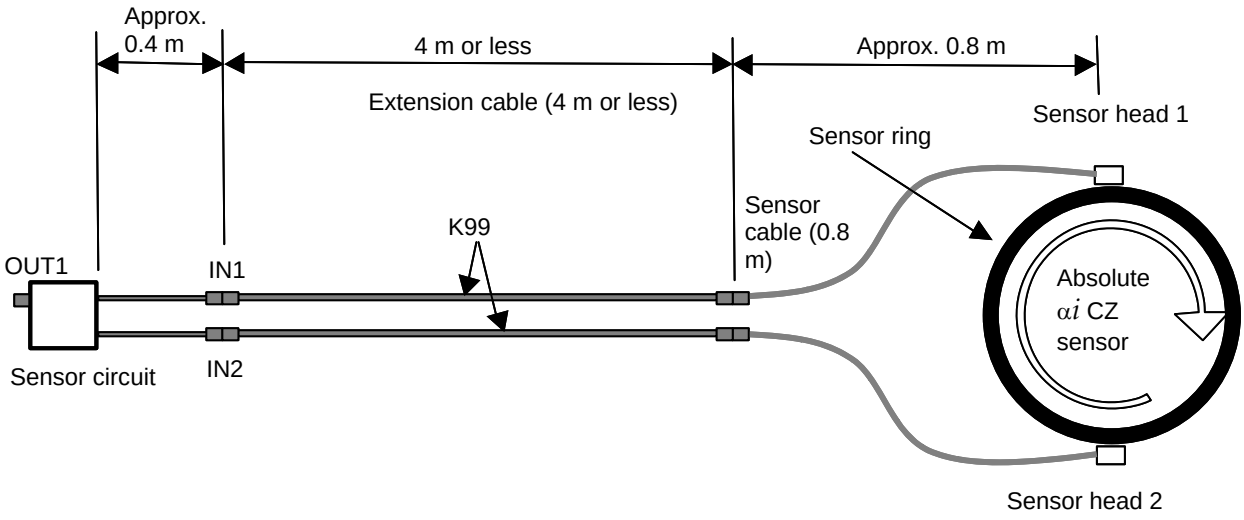

Fig. 11.1.1.3.

Cable K99

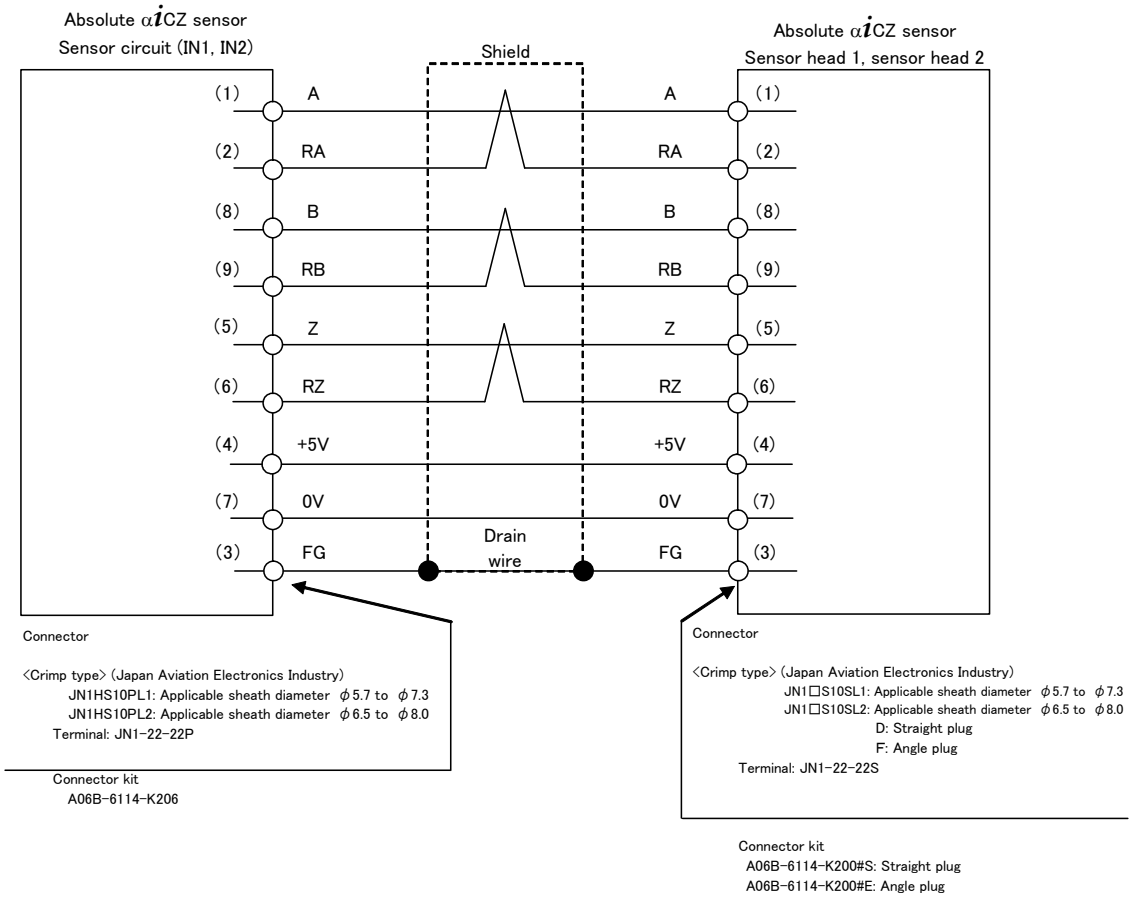

* Z and RZ are not output from sensor head 2 but may be connected.

Recommended wire 5V, 0V 0.5 mm^2
A, RA, B, RB, Z, RZ 0.2 mm^2
Recommended cable A66L-0001-0482

NOTE
When using a cable not recommended, ensure that the sum of the resistance values of 0 V and 5 V does not exceed 2 Ω.

11.1.1.4 Rotation direction of the absolute αiCZ sensor

When the sensor is viewed from the top as shown in the following figure, clockwise rotation of the sensor ring is referred to as forward rotation:

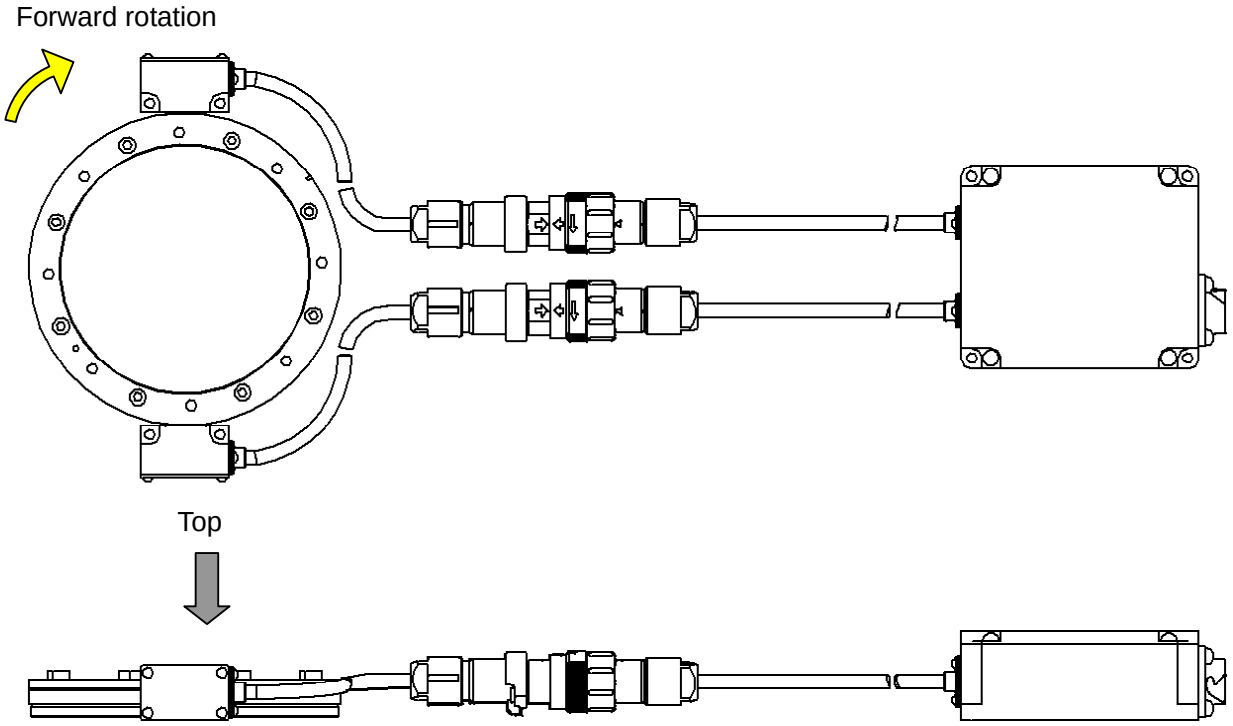

Start-up procedure (outline)

The start-up procedure is shown below.

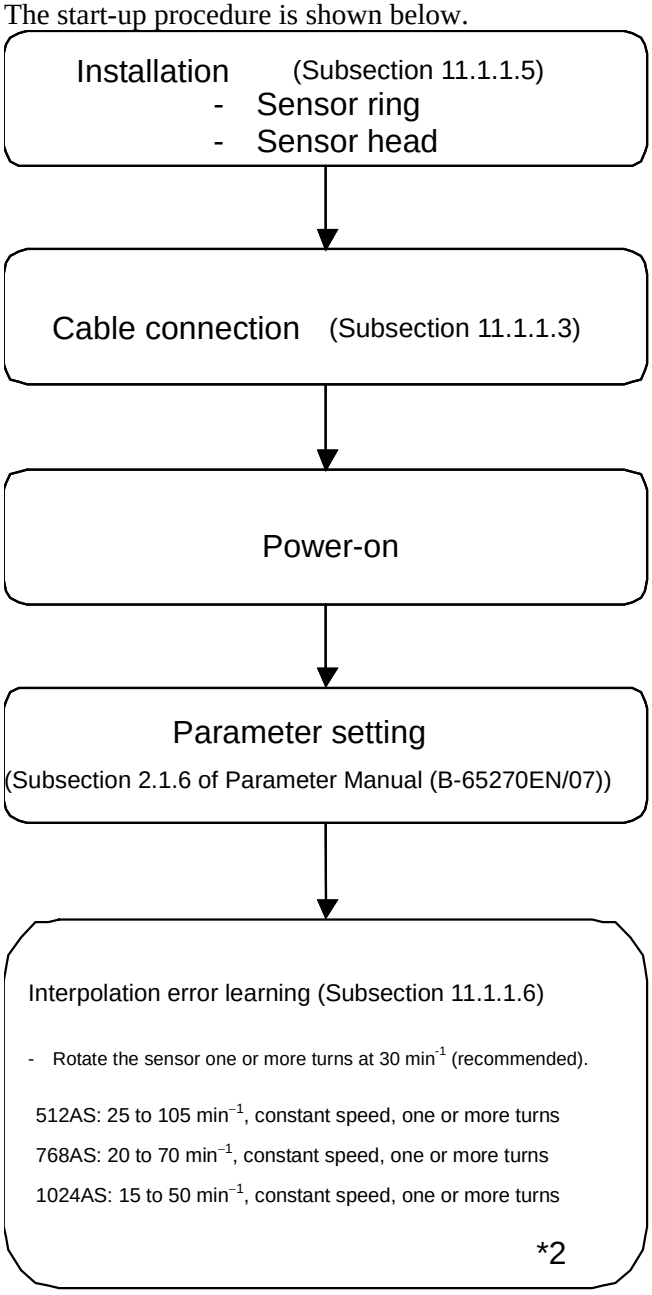

*1 The method of checking output signals is described in Subsection 11.1.1.7.

*1 If the fixed position of the sensor heads is changed after power-on, perform the operation described in Subsection 11.1.1.6.

*2 If it is difficult to rotate the sensor at least one turn for interpolation error learning, repeat forward and reverse rotations under the above rotation conditions until the sum of angular displacements in one direction becomes one turn or more, according to Subsection 11.1.1.6.

11.1.1.5 Installation

Overview

Install the sensor according to the procedure below.

1. Machine the sensor mounting surface as necessary then insert the straight pins.
2. Mount the sensor ring onto the shaft (or sleeve) of the machine, center the sensor ring, then fasten the ring with screws.
3. Adjust the gap between the sensor heads and sensor ring then mount the sensor heads onto the machine.

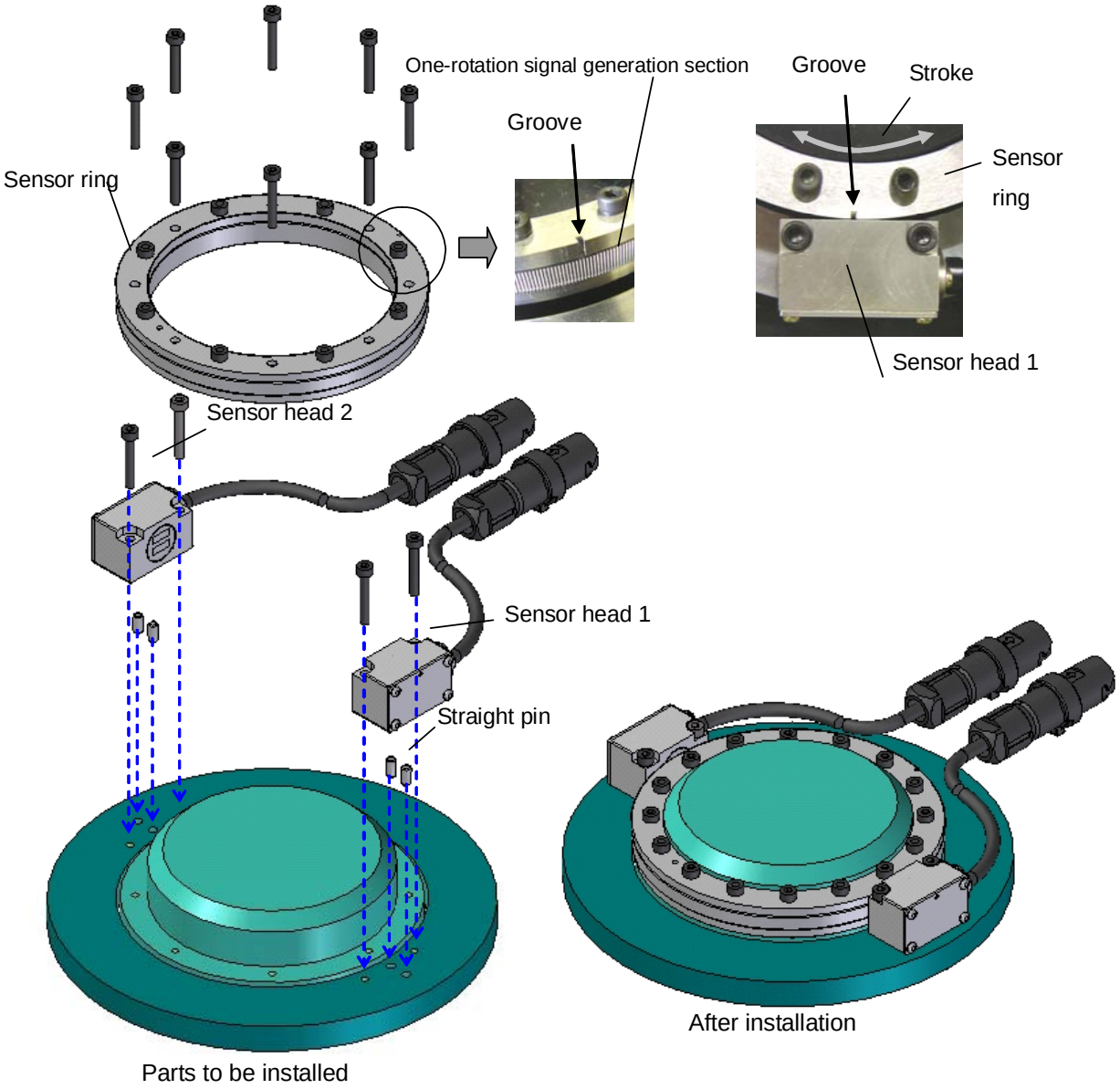

* Ensure that the groove of the one-rotation signal generation section of the sensor ring passes sensor head 1 within the stroke.

Dimensions of the sensor head mounting plane

The dimensions of the sensor head mounting plane are indicated below. Insert straight pins (supplied as accessories) into the 2-ϕ3H6 holes. The straight pins are used as the guide for gap adjustment described later.

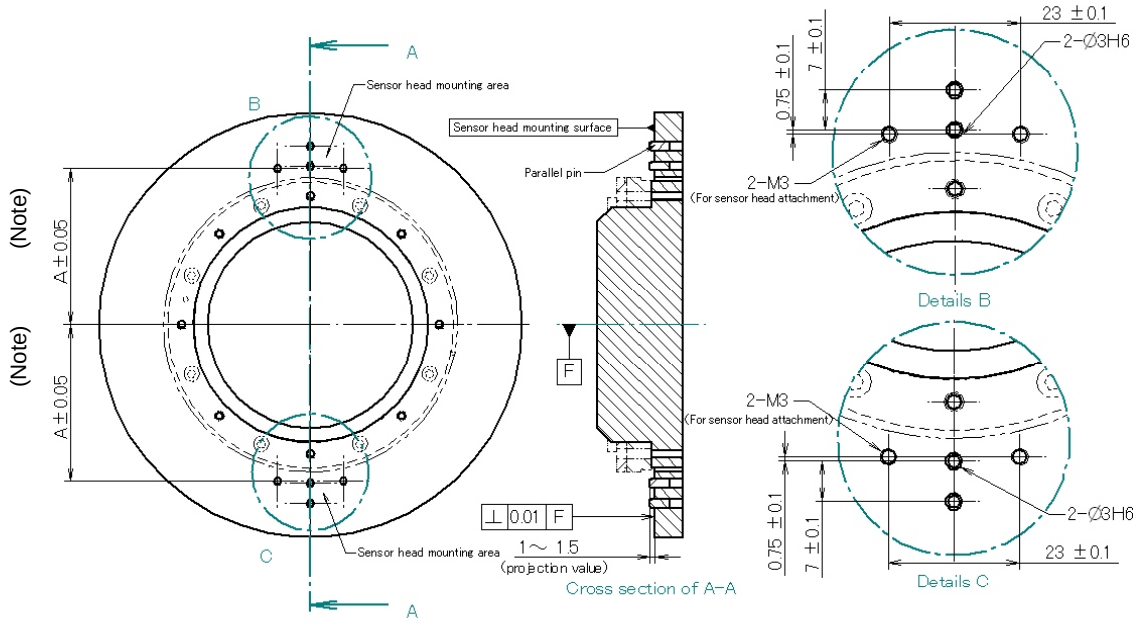

Dimension A

= (Sensor ring outer diameter)/2+3.1

(NOTE) In designing, make sure that the positions of the taps for fastening the sensor heads after machine assembly, in stead of the part having the sensor head mounting plane, satisfy these dimensions.

Installing the sensor ring

Center the sensor ring by using the centering track so that the runout to the rotation center is 0.01 mm or less. Moreover, in designing, ensure that in the direction along the shaft, the sensor ring mounting plane is 1 ±0.3 mm off the sensor head mounting plane. Ensure also that the perpendicularity of the sensor ring mounting plane is within 0.01 mm from the rotation center. Apply a thread locker or the like to the screws to prevent the screws from becoming loose.

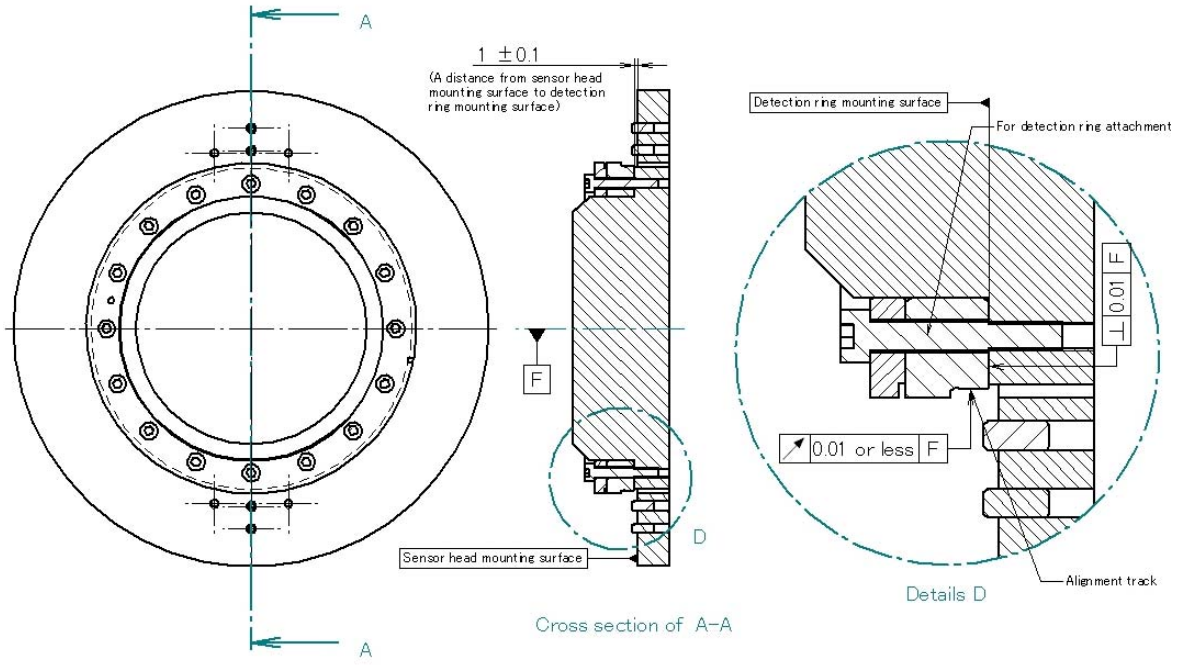

Specification	Outer diameter of centering track	Positions of sensor ring mounting holes	Mounting screw	Recommended tightening torque (Nm)
A860-2164-T411	ϕ101	8-ϕ3.4 through, equally spaced on ϕ90 circumference	M3	1.5±5%
A860-2164-T511	ϕ152.2	8-ϕ4.5 through, equally spaced on ϕ134 circumference	M4	3.0±5%
A860-2164-T611	ϕ203.4	8-ϕ5.5 through, equally spaced on ϕ170 circumference	M5	6.0±5%

NOTE

1 For centering, the outer diameter of the shaft (or sleeve) must be designed so that there is a gap of about 0.1 mm on one side between the outer surface of the shaft (or sleeve) and the inner surface of the sensor ring.
2 Secure the sensor ring on an end face with screws (avoid shrink fitting to mount the sensor ring).
3 The sensor ring consists of a phase Z ring and phase A/B ring, which are fastened together by using screws in advance. Never detach these screws. Spot facing is not provided. So, at the time of machine design, be careful not to cause interference with the screw heads.
4 Centering must be performed with the centering track (the outer surface of the phase Z ring and the teeth pitch circle are not coaxial). When performing centering, use a tool such as a plastic hammer not to damage the gear teeth.
5 Magnetic matter attached to gear teeth can lead to a detection error. After centering is completed, remove such foreign matter by air blowing.
6 If the sensor ring is tightened with excessive torque, deformation can occur in the sensor ring, resulting in deterioration in detection precision. Use the recommended tightening torque when mounting the sensor ring.

Installing the sensor heads

Install the sensor heads according to the procedure below. (The same procedure is applicable to sensor head 1 and sensor head 2.)

1. Place the sensor head on the sensor mounting surface so that the straight pins are positioned in the slot of the sensor head, and fasten the sensor head temporarily. The magnet in the sensor head and the sensor ring attract each other. When mounting the sensor head, be careful not to hit the sensor head against the sensor ring.

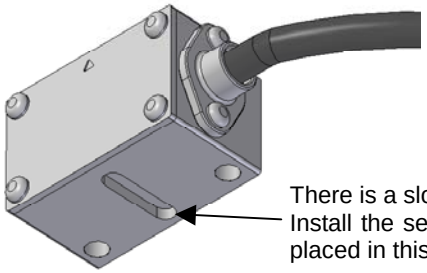

2. Insert the thickness gage (supplied as an accessory, t = 0.1 mm) between the sensor ring and the sensor head, and while lightly pressing the sensor head against the thickness gage, tighten the screws (recommended tightening torque: 1.3 Nm ±10%). Apply a thread locker or the like to the screws to prevent them from becoming loose.

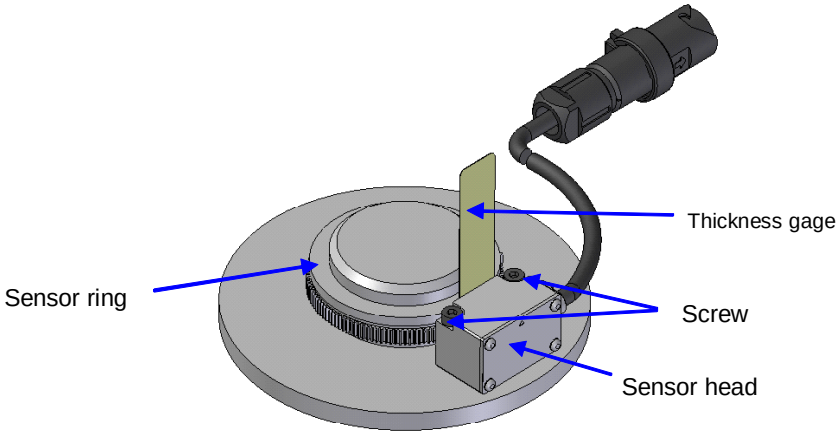

3. Pull out the thickness gage, and slowly turn the sensor ring to ensure that the sensor ring and the sensor head do not touch each other.

11.1.1.6 Notes on use

Interpolation error learning

- The absolute α*i*CZ sensor includes an automatic interpolation correction circuit that automatically learns interpolation errors and corrects them. When learning conditions are satisfied, learning is performed automatically. When the sensor rotates one or more turns, learning is completed. The learning conditions vary depending on the model. For any model, however, learning at 30 min^{-1} is recommended.

Learning conditions

α*i*CZ sensor 512AS : 25 to 105 min^{-1}, constant speed, one or more turns

α*i*CZ sensor 768AS : 20 to 70 min^{-1}, constant speed, one or more turns

α*i*CZ sensor 1024AS : 15 to 50 min^{-1}, constant speed, one or more turns

Recommended learning conditions
Common to three models: 30 min^{-1}, constant speed, one or more turns

- If the absolute α*i*CZ sensor is operated for the first time after being mounted or the procedure applicable when the sensor head is moved after conduction is performed, interpolation error learning is performed. So, rotate the sensor under the conditions above.
- Learned data is backed up by the battery.
- If it is difficult to rotate the sensor at least one turn, repeat forward and reverse rotations under the above rotation conditions to achieve at least one turn in total.
- Learning is performed when the learning conditions are satisfied.

Sensor head

- The sensor circuit memorizes the initial conduction state. So, do not move the sensor head afterward.
- If the sensor head is moved after the initial conduction state, the reference position may be displaced. Moreover, a pulse error alarm may be issued. Issue the battery zero alarm and perform reference position return operation according to "Procedure applicable when the sensor head is moved after conduction" below.

Procedure applicable when the sensor head is moved after conduction

Each of the sensor heads, sensor ring, and sensor circuit can be replaced individually. After replacement, issue the battery zero alarm according to the procedure below. Then, perform reference position return operation.

1. Detach cable K1 from connector OUT1.

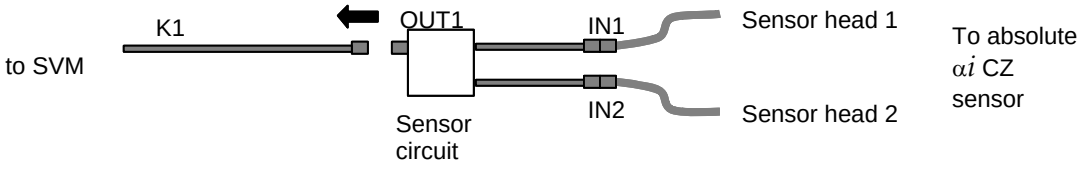

2. Connect connector IN2 to connector OUT1.
(Connector IN1 and connector IN3 may remain connected.)

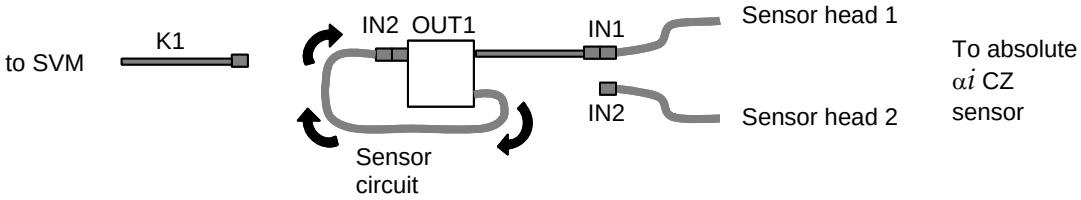

3. Leave the connection for 10 seconds.

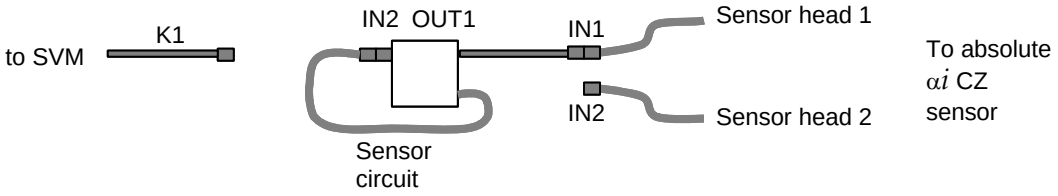

4. Connect the cables other than cable K1 correctly.

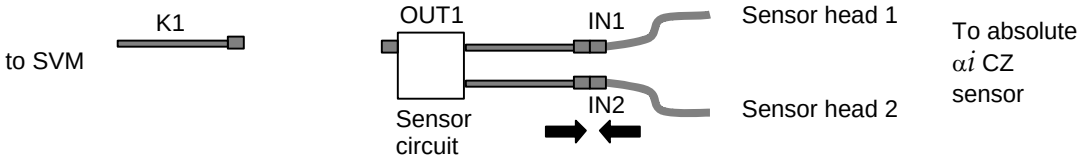

5. Connect cable K1.

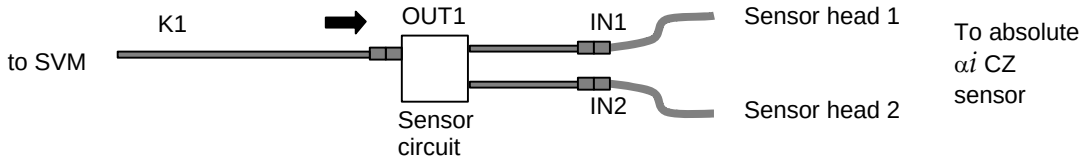

6. Check that the battery zero alarm is issued. If the battery zero alarm is not issued, return to step 1.
7. Perform reference position return operation.

Maintenance target parts

As shown below, the absolute α*i*CZ sensor consists of four parts: sensor ring (phase A/B ring and phase Z ring coupled by screws), sensor head 1, sensor head 2, and sensor circuit. Each single part can be maintained separately. So, place an order on each part as needed according to the specification numbers indicated below.

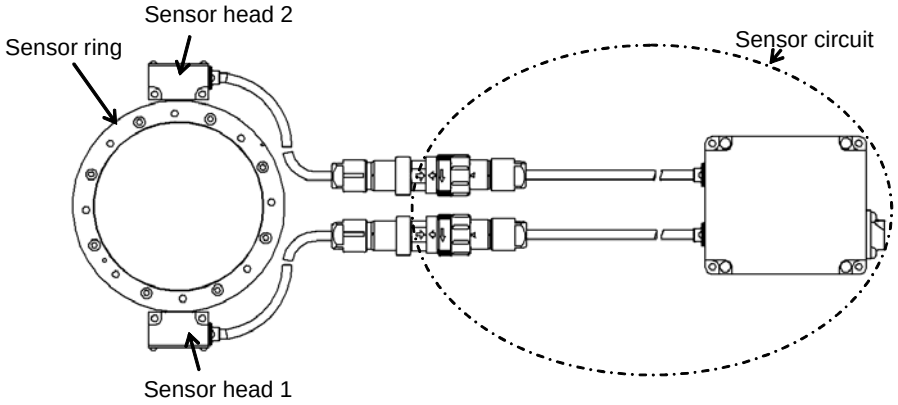

Parent specification / Part specification	α*i*CZ sensor 512AS A860-2164-T411	α*i*CZ sensor 768AS A860-2164-T511	α*i*CZ sensor 1024AS A860-2164-T611
Sensor ring	A860-2160-V901	A860-2160-V902	A860-2160-V903
Sensor head 1	A860-2162-V001 (common to all specifications)		
Sensor head 2	A860-2162-V012 (common to all specifications)		
Sensor circuit	A860-2164-V201 (common to all specifications)		

11.1.1.7 Output signal check method

* The description below is applicable to both of A860-2161-T*** and A860-2163-T***.

When checking the signal waveform directly, see the illustration below.

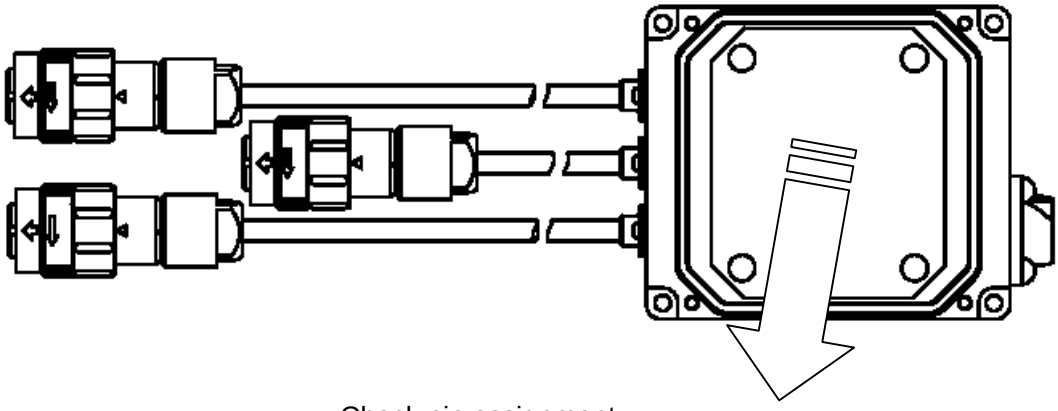

Check pin assignment

0V		A2	B2	T0						0V	5V	

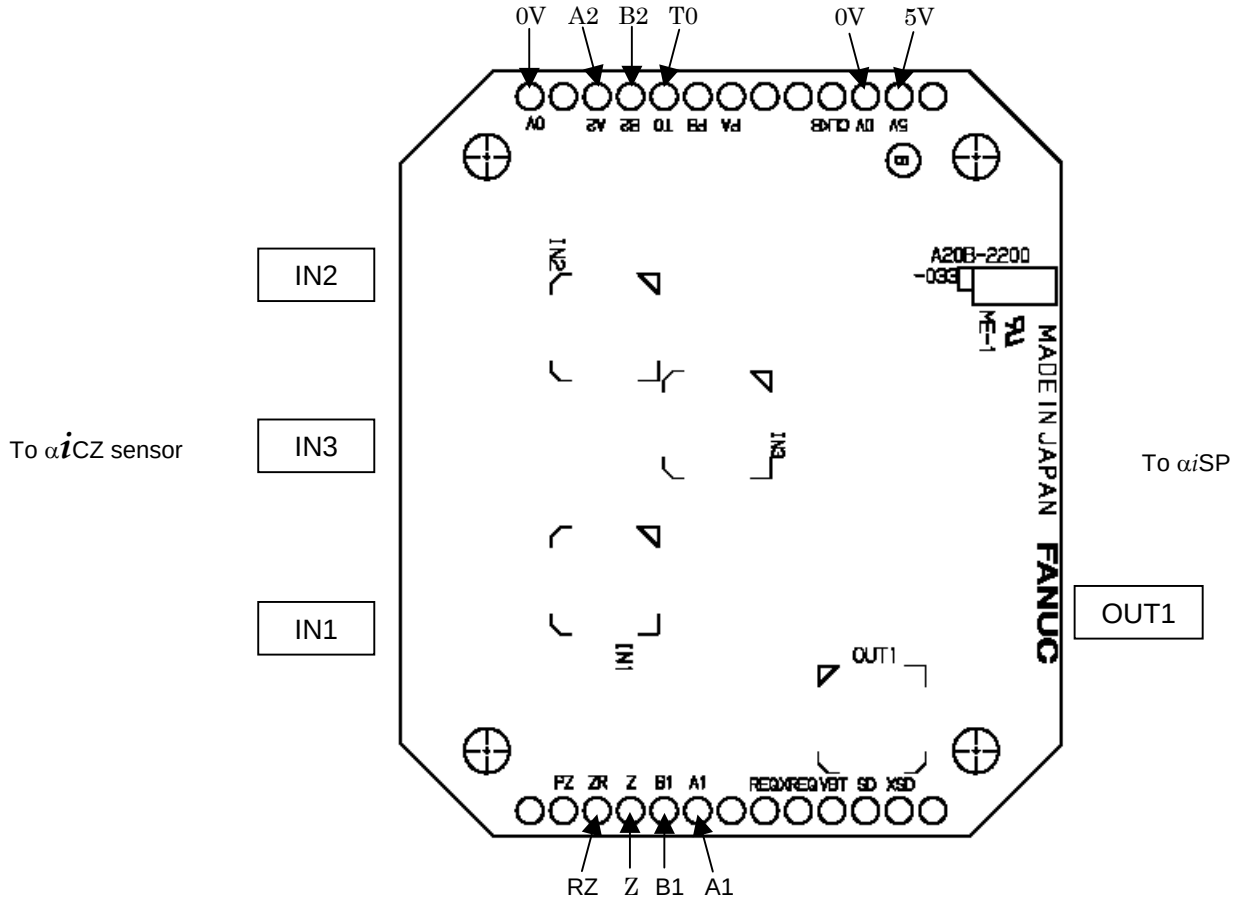

Check pin assignment

		RZ	Z	B1	A1							

- Supply power to the 0 V and 5 V pins.
- The Lissajous figure of the phase A/B output signal is a complete circle.

Phase A/B and phase Z signal waveforms (measured on the sensor circuit check pins at room temperature and 500 min^{-1})

Signal name	Check pin	Output amplitude	Offset
Sensor head 1 phase A (after amplification) Sensor head 1 phase B (after amplification)	A1 B1	1,300 to 3,000 mVp-p	±180mV
Sensor head 2 phase A (after amplification) Sensor head 2 phase B (after amplification)	A2 B2	1,300 to 3,000 mVp-p	±180mV
Sensor head 1 phase Z	Z	400 to 600 mVp-p	70 to 150 mV Measure the DC components of Z and RZ and use the differential as an offset.
Sensor head 1 RZ	RZ		

(Measure each signal by connecting the ground of the oscilloscope to T0.)

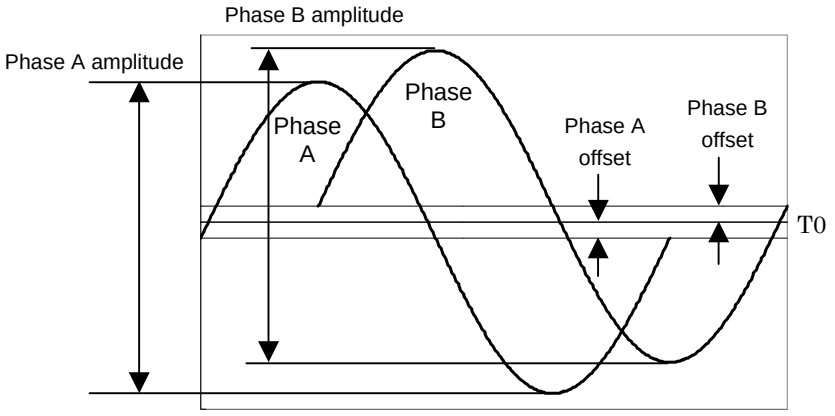

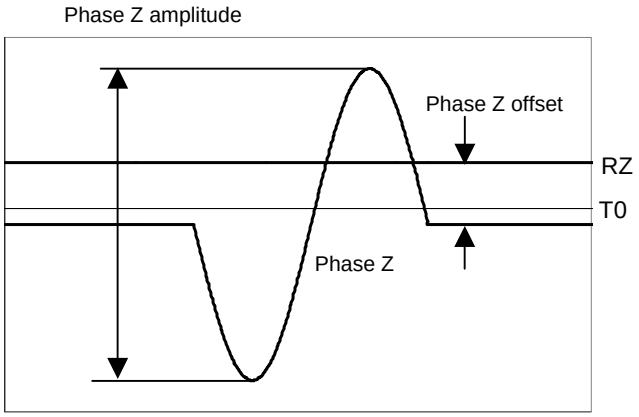

The check pins used with the αiCZ sensor fit in the following housing and crimp terminals:

Housing : HKP-13FS01 (Honda Tsushin Kogyo)

Crimp terminal: HKP-F113 (Honda Tsushin Kogyo), AWG#24 to 28 (ϕ1.0 to 1.5 mm)
HKP-F213 (Honda Tsushin Kogyo), AWG#28 to 32 (ϕ0.5 to 0.8 mm)

Crimping tool : KP309D (Honda Tsushin Kogyo)

11.2 SENSOR FOR THE SPINDLE

11.2.1 Position Coder

11.2.1.1 αi position coder

Name and specification number

Name	Specification number	Remarks
αi position coder	A860-2109-T302	□68 flange mounting, 10,000 min^{-1}

Absolute maximum ratings

Item	Specification
Power supply voltage	-0.5 V to +7.0 V
Operating temperature range	0℃ to +50℃
Humidity	95%RH or less

Electrical specifications

Item		Specification
Power supply voltage		5 V ±5%
Current consumption		350 mA or less
Output signal	PAE, *PAE, PBE, *PBE	1,024 pulses/rotation
	PSE, *PSE	1 pulse/rotation

Mechanical specifications

Item	Specification	
Input axis inertia	9.8×10^{-3} kg·m^2 or less	
Input axis start torque	0.098 N·m or less	
Allowable input axis load	Radial load (operating)	98N
	Thrust load (operating)	49N
Maximum speed	10,000 min^{-1}	
Structure	Water and dust proof (equivalent to IP55 when waterproof connector is mated)	
Tolerable vibration acceleration	10G	
Weight	Approx. 0.75 kg	

Signal phase relationships (timing chart)

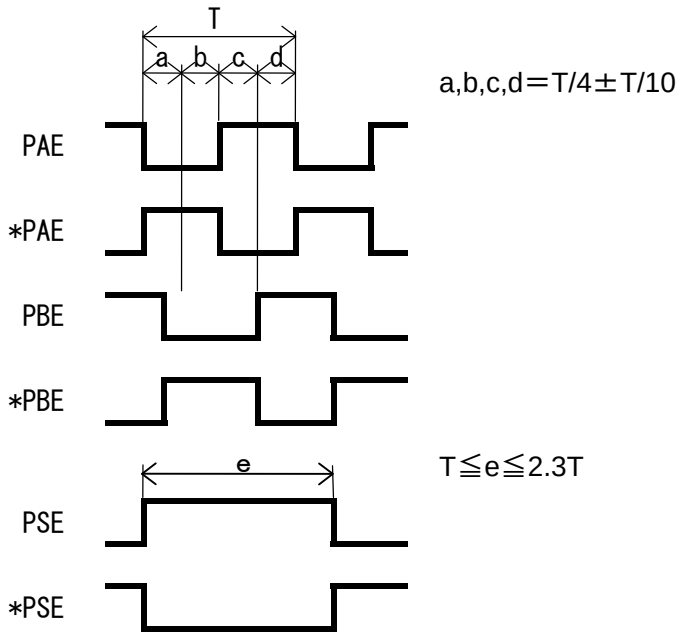

Output pin arrangement

A	B	C	D	E	F	G	H	J
PAE	PSE	PBE					+5V	
K	**L**	**M**	**N**	**P**	**R**	**S**	**T**	
0V			*PAE	*PSE	*PBE			

Dimensions

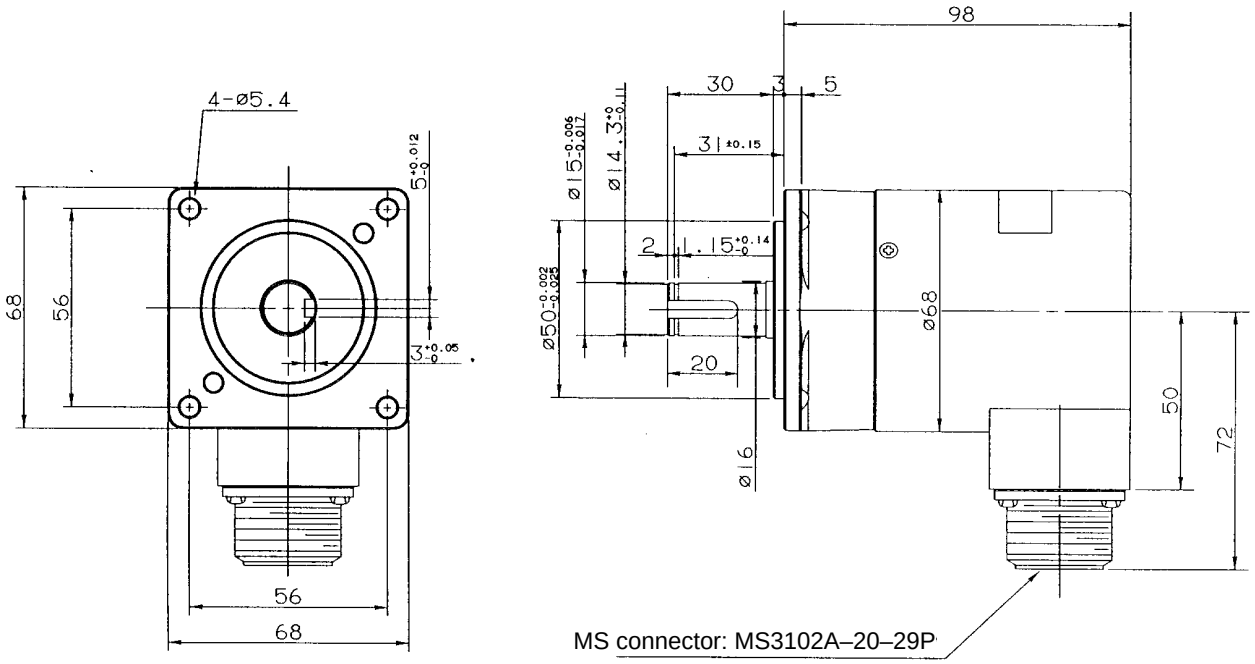
4-ø5.4
68
56
56
68
98
30
3
5
31 ±0.15
2
20
ø68
50
72
ø16
MS connector: MS3102A–20–29P

11.2.1.2 α position coder S

Name and specification number

Name	Specification number	Remarks
α position coder S	A860-0309-T352	□68 flange mounting, 10,000 min^{-1}

Absolute maximum ratings

Item	Specification
Power supply voltage	-0.5 V to +7.0 V
Operating temperature range	0℃ to +50℃
Humidity	95%RH or less

Electrical specifications

Item		Specification
Power supply voltage		5 V ±5%
Current consumption		350 mA or less
Output signal	AP, BP	1,024λ/rotation
	PSE, *PSE	1 pulse/rotation

Mechanical specifications

Item	Specification	
Input axis inertia	9.8×10^{-3} kg·m^2 or less	
Input axis start torque	0.098 N·m or less	
Allowable input axis load	Radial load (operating)	98N
	Thrust load (operating)	49N
Maximum speed	10,000 min^{-1}	
Structure	Water and dust proof (equivalent to IP55 when waterproof connector is mated)	
Tolerable vibration acceleration	10G	
Weight	Approx. 0.75 kg	

Signal phase relationships (timing chart)

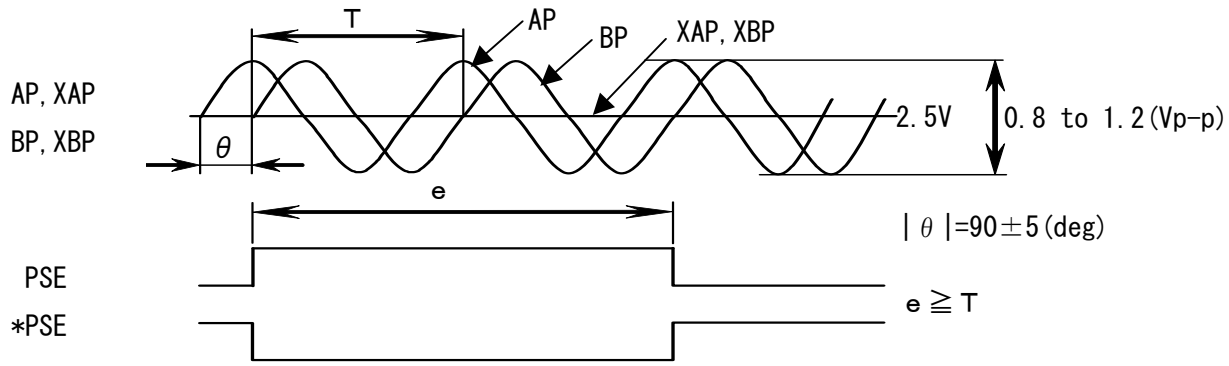

Hi: 2.4 V or more

Lo: 0.4 V or less

Output pin arrangement

A	B	C	D	E	F	G	H	J
AP	PSE	BP					+5V	
K	**L**	**M**	**N**	**P**	**R**	**S**	**T**	
0V			XAP	*PSE	XBP			

Dimensions

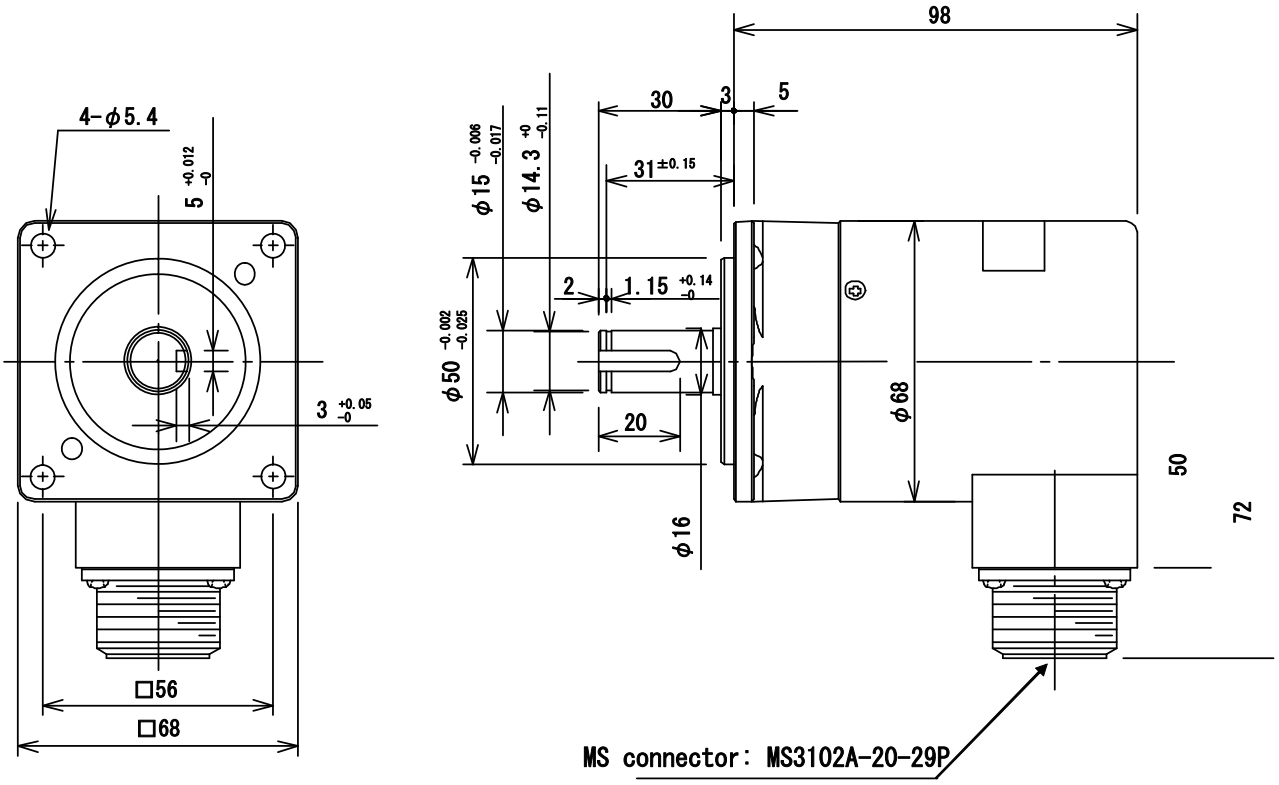
4-φ5.4
5 +0.012 -0
3 +0.05 -0
□56
□68
98
30
3
5
φ15 -0.006 -0.017
φ14.3 +0 -0.11
31±0.15
2
1.15 +0.14 -0
φ50 -0.002 -0.025
20
φ16
φ68
50
72
MS connector: MS3102A-20-29P

11.2.1.3 Installation conditions and notes

(a) Method of connection
Two methods of connecting the α*i* position coder or α position coder S to the spindle are available as described below.

(1) With one method, the position coder is connected to the rear part of the spindle by using a flexible joint
In this case, the rotation of the spindle is transported accurately to the position coder, resulting in a higher accuracy in position coder positioning. However, the position coder installation location is limited, so that the mechanical section may need to be modified.

(2) With the other method, a shaft for holding a pulley is fitted into the shaft of the position coder and is held by two bearings as shown below. In this case, a timing belt is used to connect the pulley of the position coder to the pulley attached to the spindle.

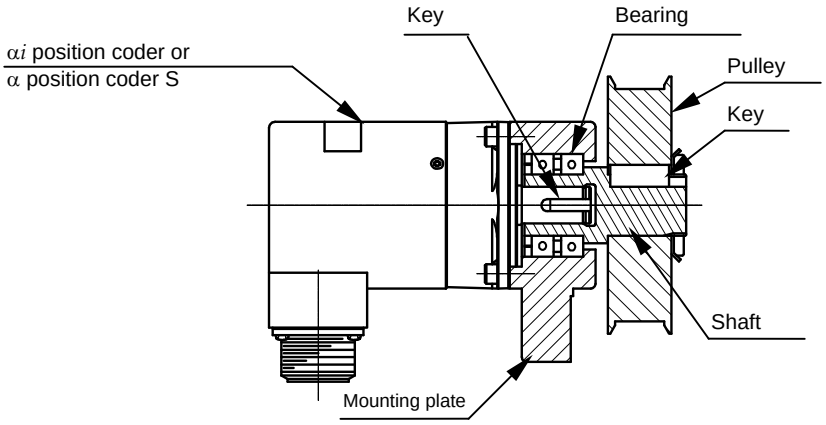

This connection method is generally used to connect a conventional position coder to the spindle. When using this method, note the following:

<1> If there is a clearance between the shaft for holding the pulley and the shaft of the position coder, the shaft of the position coder can suffer from fretting or the key can becomes loose, resulting in a degraded accuracy in position coder positioning. So, specify tolerances for good fitting so that there is no clearance between the shaft of the position coder and the shaft for holding the pulley and between the key and key groove.

<2> If the outer diameter center of the pulley of the position coder is not aligned with the axis center of the shaft of the position coder, or if the outer diameter center of the pulley fitted around the spindle is not aligned with the axis center of the spindle, the spindle positioning accuracy is degraded in proportion to the magnitude of eccentricity. So, minimize these eccentricities.

(b) Shock
The position coder is a precision sensor. So, be careful not to apply a shock to the shaft.

(c) Atmosphere
The protection of the position coder satisfies class IP55, but the protection is provided on a short-time basis only. So, ensure that the position coder is not routinely exposed to coolant and lubricant and is free from buildup of oil. If the position coder is exposed to coolant and lubricant, install a protection cover.

11.2.2 αiBZ Sensor (A860-2150-T*** and A860-2155-T***)

Two types of αiBZ sensors are available: αiBZ sensors of the conventional dimensions (A860-2120-T***) and compact-size αiBZ sensors (A860-2150-T*** and A860-2155-T***). The αiBZ sensors of the conventional dimensions and compact-size αiBZ sensors are not compatible with each other from the viewpoint of installation. If the number of sensor ring teeth of an αiBZ sensor of the conventional dimensions is the same as that of a compact-size αiBZ sensor, the sensor rings of the sensors have the same inner and outer diameters. The αiBZ sensors of the conventional dimensions and compact-size αiBZ sensors have the same output signal specifications. So, when a sensor of one type is replaced with a sensor of the other type, no parameter modification is needed.

Names and specification numbers

Name	Specification number		Remarks			
					Sensor ring	
	Waterproof connector specification	Non-waterproof connector specification	Number of teeth	Maximum speed	Inner diameter	Outer diameter
αiBZ sensor 128	A860-2150-T201	A860-2155-T201	128	20,000min^{-1}	φ40	φ52
αiBZ sensor 128H	A860-2150-T211	A860-2155-T211		70,000min^{-1}		
αiBZ sensor 192	A860-2150-T301	A860-2155-T301	192	20,000min^{-1}	φ60	φ77.6
αiBZ sensor 192H	A860-2150-T311	A860-2155-T311		40,000min^{-1}		
αiBZ sensor 256	A860-2150-T401	A860-2155-T401	256	15,000min^{-1}	φ82	φ103.2
αiBZ sensor 256S	A860-2150-T404	A860-2155-T404			φ88	
αiBZ sensor 256H	A860-2150-T411	A860-2155-T411		30,000min^{-1}	φ82	
αiBZ sensor 384	A860-2150-T511	A860-2155-T511	384	15,000min^{-1}	φ125	φ154.4
αiBZ sensor 512	A860-2150-T611	A860-2155-T611	512	10,000min^{-1}	φ160	φ205.6

Absolute maximum ratings

Item	Specification
Power supply voltage	-0.5 V to +7.0 V
Operating temperature range	0℃ to +80℃
Humidity	95%RH or less

Electrical specifications

Item			Specification
Power supply voltage			5 V ±5%
Current consumption			0.05 A or less
Output signal	VA, VB	αiBZ sensor 128/128H	128λ/rotation
		αiBZ sensor 192/192H	192λ/rotation
		αiBZ sensor 256/256H/256S	256λ/rotation
		αiBZ sensor 384	384λ/rotation
		αiBZ sensor 512	512λ/rotation
	VZ	Common to all models	1λ/rotation

Resolution and precision

Name	Resolution in Cs contour control	Precision (typ.)
αiBZ sensor 128/128H	360,000/rotation	30/1000°
αiBZ sensor 192/192H		25/1000°
αiBZ sensor 256/256H/256S		20/1000°
αiBZ sensor 384		15/1000°
αiBZ sensor 512		10/1000°

NOTE

1 The precision values above are not guaranteed values but typical values.

2 The precision values above do not consider the influence of an error due to runout in sensor ring installation. The influence of runout in sensor ring installation on precision can be calculated as follows:

Error (°) = A (mm) × 360/B (mm)

A : Axis runout of the machine spindle or sleeve on the sensor ring mounting plane

B : Perimeter of the sensor ring

Example: If the axis runout on the mounting plane is 0.005 mm when a 256λ sensor ring (103.2 in diameter) is used, the error is:
$0.005 \times 360/(103.2 \times \pi) = 0.0055(°)$

Dimensions

[A860-2150-T***]

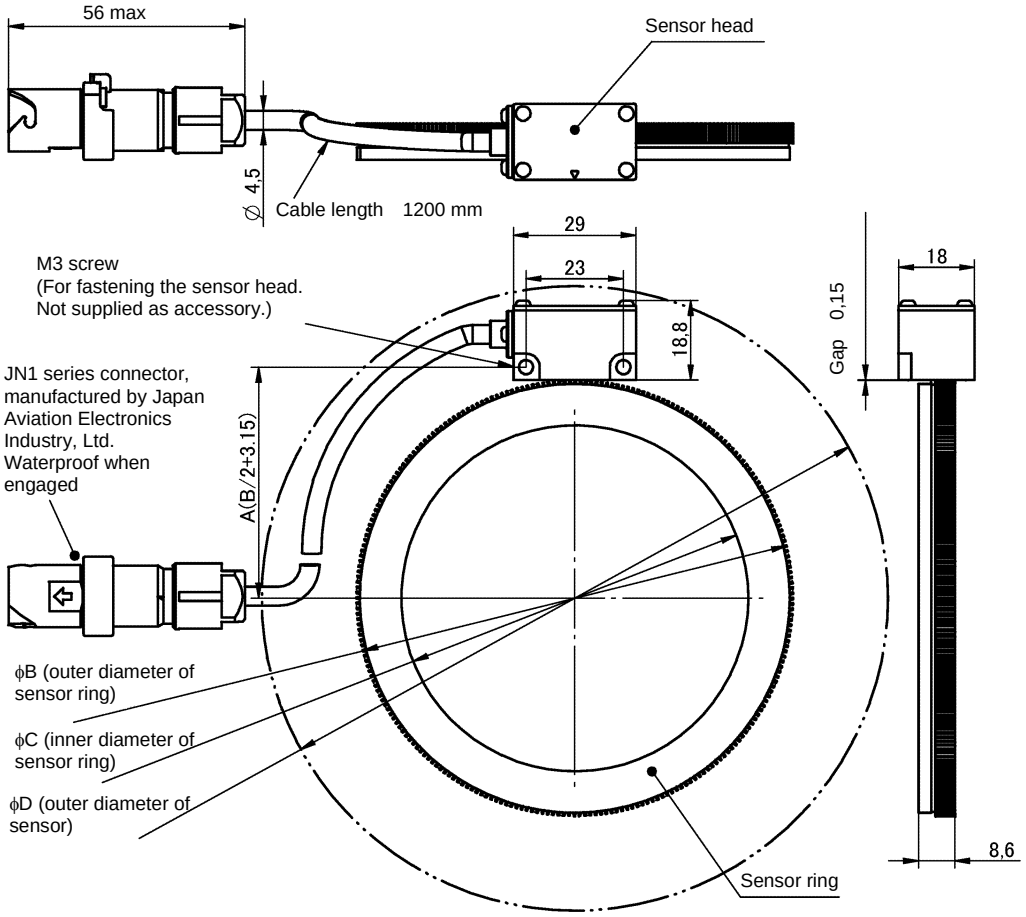

Accessories:

Straight pin (JIS B 1354-1988, class A, normal diameter of ϕ3, normal length of 6) × 2, 0.15-mm thickness gage × 1

Unit (mm)

Sensor type number	Number of teeth	A	ϕB	ϕC	ϕD
A860-2150-T201	128	29.15	$52^{+0}_{-0.020}$	$40^{+0.016}_{-0}$	98
A860-2150-T211					
A860-2150-T301	192	41.95	$77.6^{+0}_{-0.020}$	$60^{+0}_{-0.018}$	122
A860-2150-T311					
A860-2150-T401	256	54.75	$103.2^{+0}_{-0.020}$	$82^{+0}_{-0.018}$	148
A860-2150-T404				$88^{+0}_{-0.018}$	
A860-2150-T411				$82^{+0}_{-0.018}$	
A860-2150-T511	384	80.35	$154.4^{+0}_{-0.020}$	$125^{+0.025}_{-0}$	198
A860-2150-T611	512	105.95	$205.6^{+0}_{-0.020}$	$160^{+0.020}_{-0.005}$	249

[A860-2155-T***]

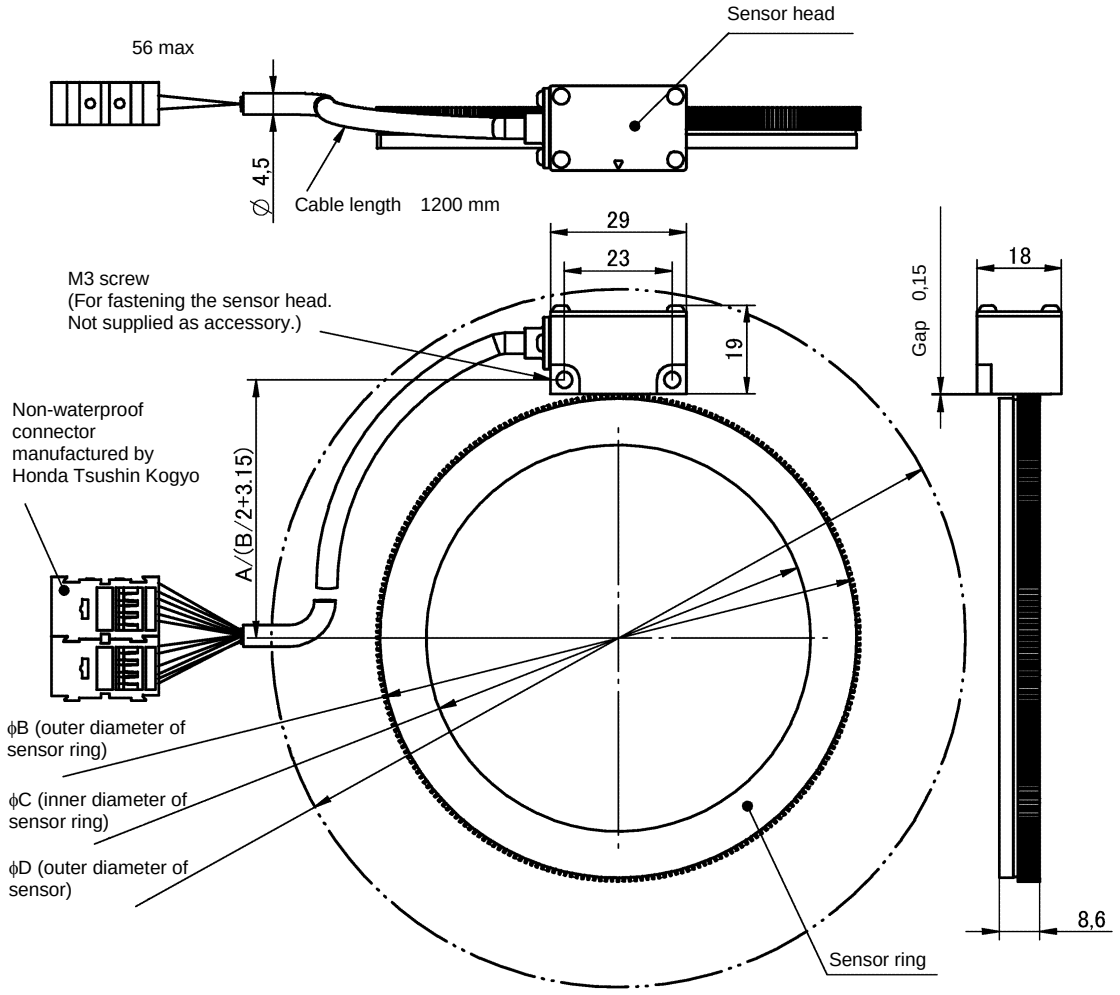

Accessories:

Straight pin (JIS B 1354-1988, class A, normal diameter of ϕ3, normal length of 6) × 2, 0.15-mm thickness gage × 1

Unit (mm)

Sensor type number	Number of teeth	A	ϕB	ϕC	ϕD
A860-2155-T201	128	29.15	$52^{+0}_{-0.020}$	$40^{+0.016}_{-0}$	98
A860-2155-T211					
A860-2155-T301	192	41.95	$77.6^{+0}_{-0.020}$	$60^{+0}_{-0.018}$	122
A860-2155-T311					
A860-2155-T401	256	54.75	$103.2^{+0}_{-0.020}$	$82^{+0}_{-0.018}$	148
A860-2155-T404				$88^{+0}_{-0.018}$	
A860-2155-T411				$82^{+0}_{-0.018}$	
A860-2155-T511	384	80.35	$154.4^{+0}_{-0.020}$	$125^{+0.025}_{-0}$	198
A860-2155-T611	512	105.95	$205.6^{+0}_{-0.020}$	$160^{+0.020}_{-0.005}$	249

NOTE
- Use the sensor under 80°C.
- The sensor is a precision part. Use special care in handling. In particular, do not apply force to the sensor head.
- Fasten the cable to the machine at an appropriate position so that no force is applied directly to the sensor head.
- The sensor is waterproof to an IP67 rating. Note, however, that the waterproofness represented by IP indicates short-time resistance to water only and does not guarantee thorough waterproofness. Therefore, protect the sensor head against direct splash of coolant and so on by taking appropriate measures, for example, by installing a cover.
- When installing the sensor, observe the requirements described in "Installation" described later.
- For easy maintenance, mount the αiBZ sensor at a position where it can be replaced easily.
- Sensor rings with the same specification number can be replaced with each other.

Notes on the sensor ring

The sensor ring consists of the phase Z signal generation section and the phase A/B signal generation section. The new αiBZ sensors are different from the conventional αiBZ sensors in that the new αiBZ sensors integrate the phase A/B signal generation section and the phase Z signal generation section into one piece, and that the phase Z signal generation section has a convex shape instead of a concave shape. When handling the sensor ring, be very careful not to deform or damage the teeth on the outer surface of the sensor ring.

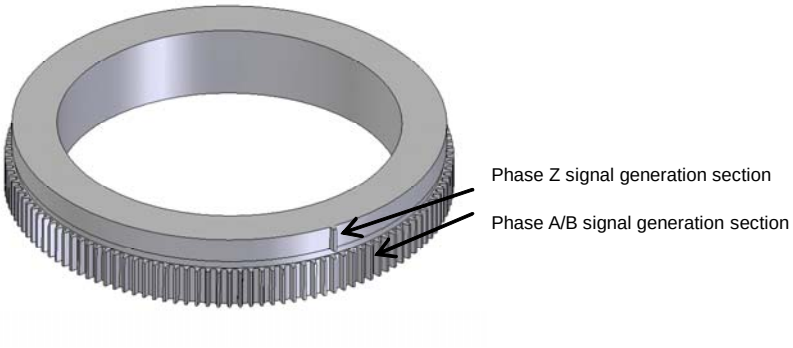

Interference of the sensor ring

The following table lists the interference for heat shrink fitting for the sensor ring at each maximum speed:

Unit (μm)

Max. speed (min^{-1})	T201	T211	T301	T311	T401 T404	T411	T511	T611
3000	ϕ6 - ϕ32	ϕ6 - ϕ32	ϕ6 - ϕ34	ϕ6 - ϕ34	ϕ7 - ϕ35	ϕ7 - ϕ35	ϕ8 - ϕ43	ϕ11 - ϕ41
3500	↓	↓	↓	↓	↓	↓	ϕ9 - ϕ44	ϕ13 - ϕ43
4500	↓	↓	↓	↓	↓	↓	ϕ11 - ϕ46	ϕ19 - ϕ49
6000	↓	↓	ϕ7 - ϕ35	ϕ7 - ϕ35	ϕ9 - ϕ37	ϕ9 - ϕ37	ϕ15 - ϕ50	ϕ29 - ϕ59
8000	↓	↓	ϕ8 - ϕ36	ϕ8 - ϕ36	ϕ11 - ϕ39	ϕ11 - ϕ39	ϕ24 - ϕ59	ϕ47 - ϕ77
10000	↓	↓	ϕ9 - ϕ37	ϕ9 - ϕ37	ϕ15 - ϕ43	ϕ14 - ϕ42	ϕ35 - ϕ70	ϕ71 - ϕ101
12000	ϕ7 - ϕ33	ϕ7 - ϕ33	ϕ11 - ϕ39	ϕ11 - ϕ39	ϕ19 - ϕ47	ϕ18 - ϕ46	ϕ47 - ϕ82	
15000	ϕ8 - ϕ34	ϕ8 - ϕ34	ϕ13 - ϕ41	ϕ13 - ϕ41	ϕ28 - ϕ56	ϕ26 - ϕ54	ϕ71 - ϕ106	
20000	ϕ10 - ϕ36	ϕ10 - ϕ36	ϕ19 - ϕ47	ϕ19 - ϕ47		ϕ41 - ϕ69		
25000		ϕ12 - ϕ38		ϕ27 - ϕ55		ϕ62 - ϕ90		
30000		ϕ15 - ϕ41		ϕ37 - ϕ65		ϕ87 - ϕ115		
40000		ϕ23 - ϕ49		ϕ61 - ϕ89				
50000		ϕ33 - ϕ59						
60000		ϕ43 - ϕ69						
70000		ϕ57 - ϕ83						

NOTE
- From the above table, select the suitable interference according to the maximum speed and the type of the ring used.
  If an interference not listed above is applied, the ring will be damaged or loosen while the spindle rotates.
- These rings cannot be used at a speed higher than the speeds specified in the above table.

Installation

Install the sensor according to the procedure below.

<1> Machine the sensor mounting surface as necessary then insert the straight pins.
<2> Fit the sensor ring around the machine shaft (or sleeve) by heat shrink fitting.
<3> Adjust the gap between the sensor head and sensor ring then mount the sensor on the machine. Fig. 1 shows the parts to be installed and Fig. 2 shows the external view after installation.

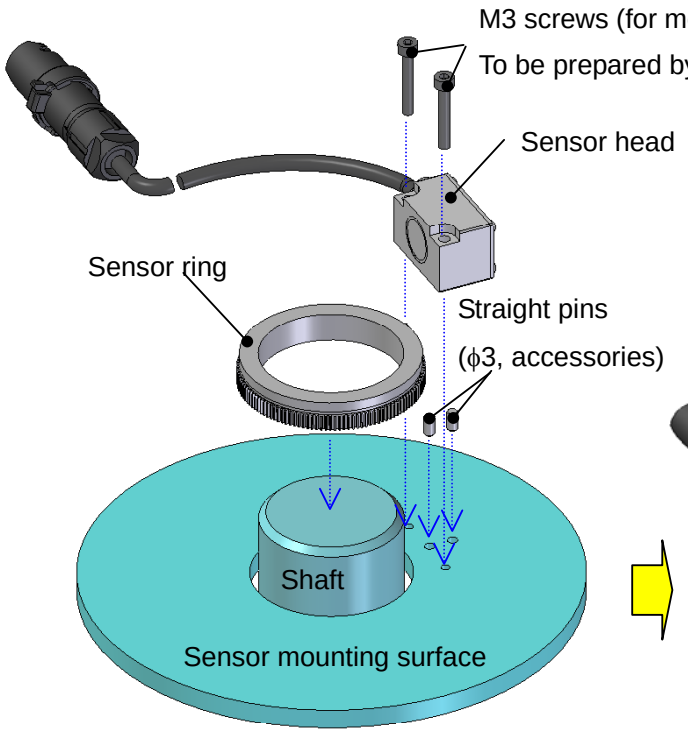

Fig. 1 Parts to be installed

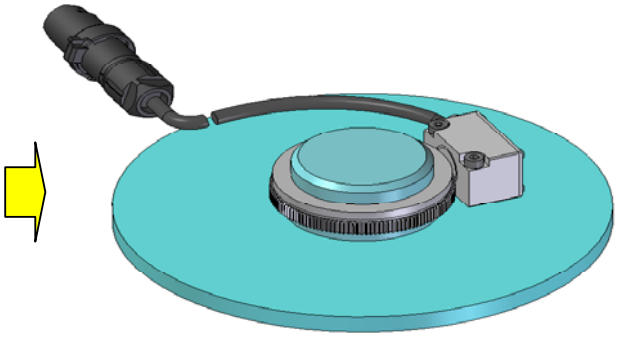

Fig. 2 After installation

Machining the sensor mounting surface

Machine the sensor mounting surface as shown in Fig. 3. Insert straight pins (supplied as accessories) into the 2-ϕ3H6 holes. The straight pins are used as the guide for gap adjustment described later.

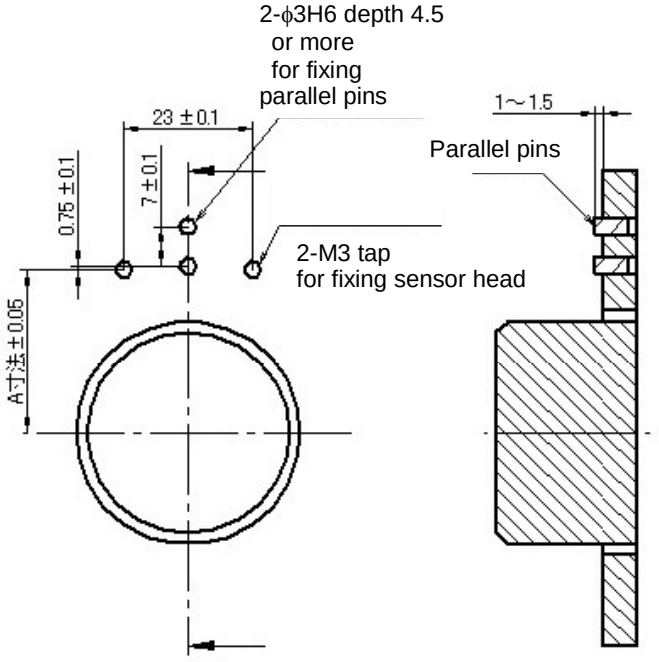

Fig. 3

Installing the sensor ring

Fit the sensor ring around the shaft or sleeve by heat shrink fitting so that the bottom of the phase A/B signal generation section (gear) is 4.7 ±0.2 mm off the sensor mounting surface. The runout of the shaft or sleeve part around which the sensor ring is fit by heat shrink fitting must be 0.005 mm or less.

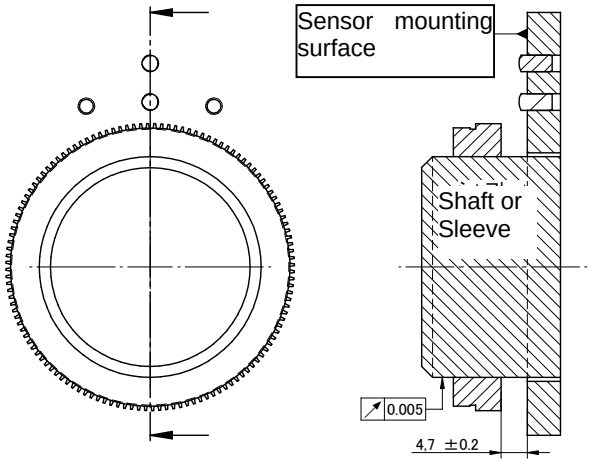

Installing the sensor head

Install the α*i*BZ sensor head according to the procedure below.

Place the sensor head on the sensor mounting surface so that the straight pins are positioned in the slot of the sensor head, and fasten the sensor head temporarily. When mounting the sensor head, be careful not to hit the sensor head against the sensor ring.

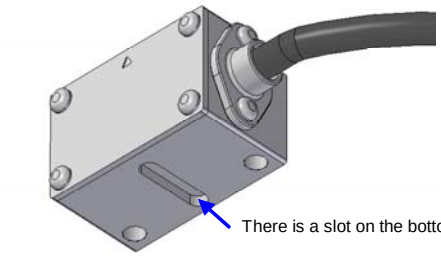

Insert the thickness gage (supplied as an accessory, t = 0.15 mm) between the sensor ring and the sensor head, and while lightly pressing the sensor head against the thickness gage, tighten the sensor mounting screws (recommended tightening torque: 1.3 Nm ±10%). Apply a thread locker or the like to the sensor mounting screws to prevent them from becoming loose.

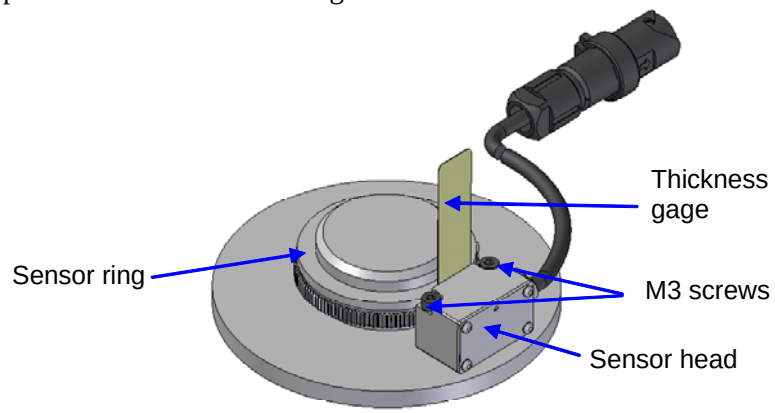

Pull out the thickness gage, and slowly turn the spindle to ensure that the sensor ring and the sensor head do not touch each other.

Check that the gap between the sensor ring and the sensor is at least 0.1 mm.

The output signal level of the α*i*BZ sensor is designed to fall within the specified range if the sensor head is mounted correctly. Depending on the mounting status, the output signal level may exceed the specified range, which can lead to malfunction. Therefore, make sure that the output signal level is within the specified range.

11.2.3 αiCZ Sensor (for the Spindle)

This subsection describes the specifications and handling of the αiCZ angular displacement sensor.
The αiCZ sensor is used with the built-in spindle motor BiI series/BiS series or αi spindle motor to exercise high-precision Cs contour control. Two major types of αiCZ sensors are available. One type is used for the built-in spindle motor and the other for the spindle. A type needs to be selected according to the system configuration.

[αiCZ sensor (for built-in spindle motor)]

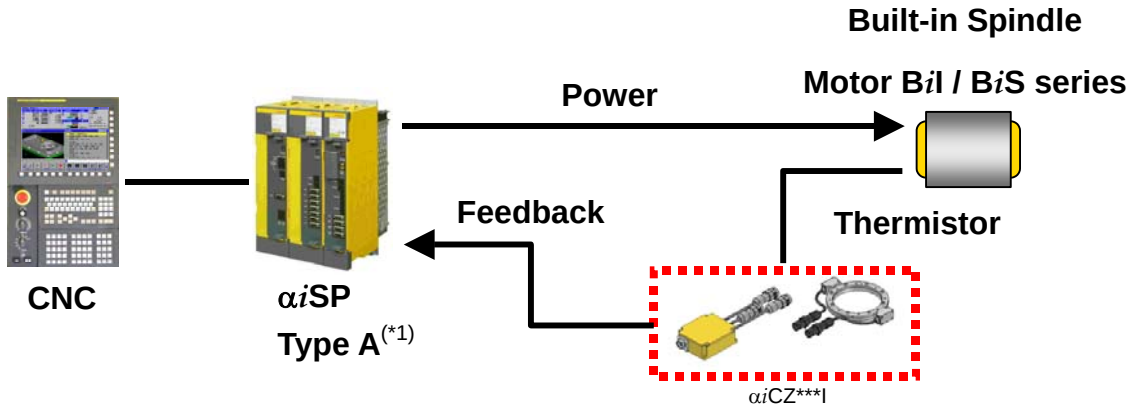

(For built-in spindle motor)

[αiCZ sensor (for spindle)]

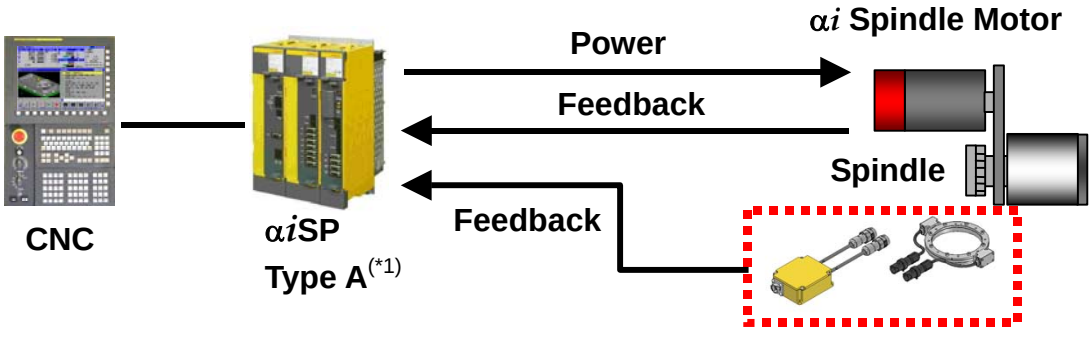

(For spindle)

*1)
Supported unit drawing numbers and versions

Drawing number	Supported unit version
200V system A06B-6141-H002, -H006, -H011, -H015, -H030, -H037, -H055#H580 400V system A06B-6151-H006, -H011, -H015, -H045, -H075, -H100#H580	Version B or later
200V system A06B-6141-H022, -H026, -H045#H580 400V system A06B-6151-H030#H580	Version C or later

11.2.3.1 Names and specification numbers

αiCZ sensor (for built-in spindle motor) A860-2161-T***

Name and specification number

Name	Specification number	Remarks	
		Number of teeth	Maximum speed
αiCZ sensor 512I	A860-2161-T411	512	15,000min^{-1}
αiCZ sensor 768I	A860-2161-T511	768	10,000min^{-1}
αiCZ sensor 1024I	A860-2161-T611	1024	8,000min^{-1}

αiCZ sensor (for spindle) A860-2163-T***

Name and specification number

Name	Specification number	Remarks	
		Number of teeth	Maximum speed
αiCZ sensor 512IS	A860-2163-T411	512	15,000min^{-1}
αiCZ sensor 768IS	A860-2163-T511	768	10,000min^{-1}
αiCZ sensor 1024IS	A860-2163-T611	1024	8,000min^{-1}

11.2.3.2 Absolute maximum ratings

* The description below is applicable to both of A860-2161-T*** and A860-2163-T***.

Absolute maximum ratings (common to all specifications)

Item	Specification
Power supply voltage	-0.5 V to +6.0 V
Operating temperature range	0℃ to +50℃
Humidity	95%RH or less

11.2.3.3 Specifications

[αiCZ sensor (for built-in spindle motor) A860-2161-T***]

αiCZ sensor 512I

Mechanical and electrical specifications

Item	Min.	Typ.	Max.	Unit
Speed			15,000	min^{-1}
Resolution		1/3,600,000		Revolution
Precision		±4		Second
Repetition precision		±1		Second
Power supply voltage	4.5	5	5.25	V
Current consumption		150		mA
Water and dust proof class	IP67			

Dimensions

αiCZ sensor 512 I

A860-2161-T411

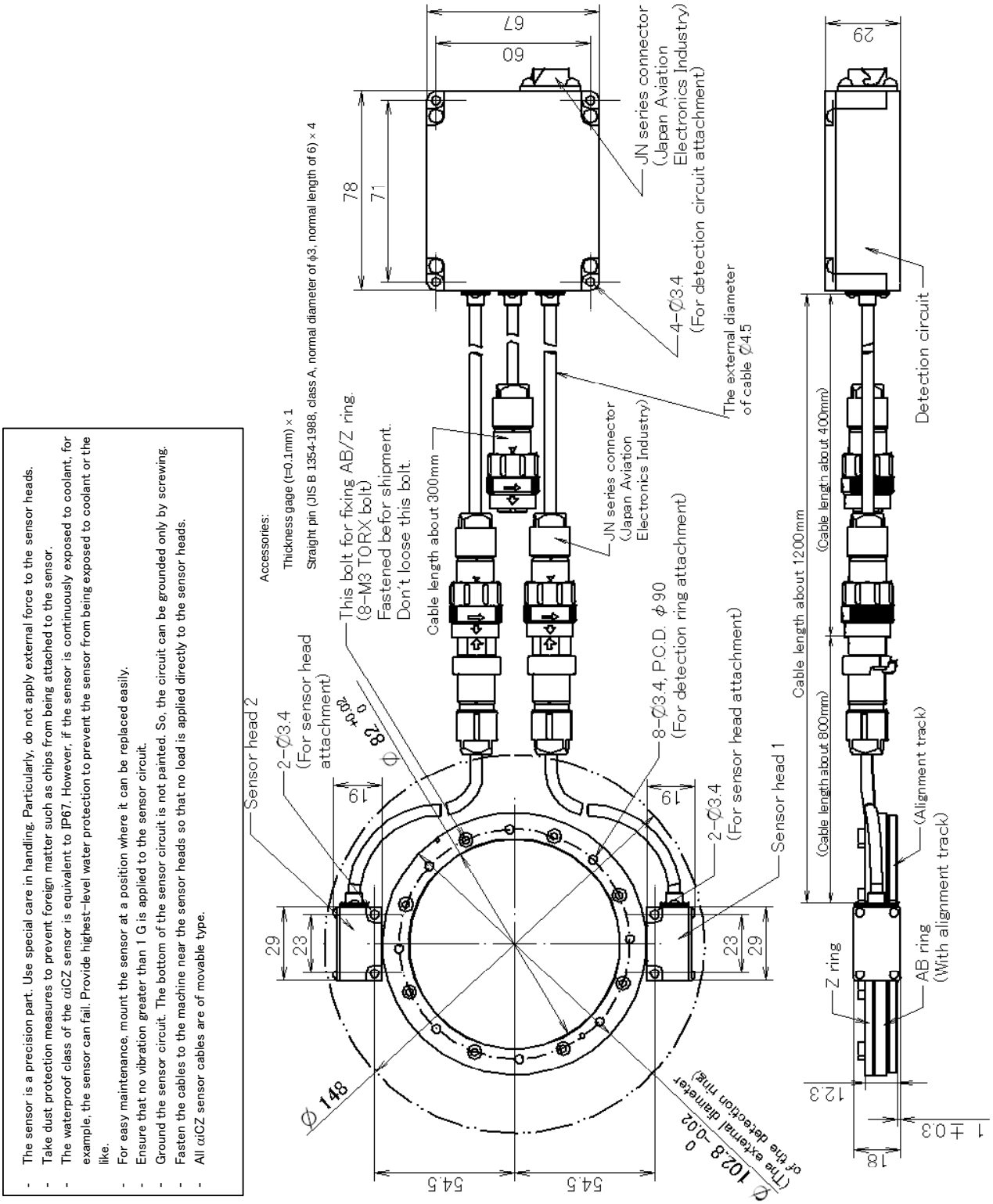

- The sensor is a precision part. Use special care in handling. Particularly, do not apply external force to the sensor heads.
- Take dust protection measures to prevent foreign matter such as chips from being attached to the sensor.
- The waterproof class of the αiCZ sensor is equivalent to IP67. However, if the sensor is continuously exposed to coolant, for example, the sensor can fail. Provide highest-level water protection to prevent the sensor from being exposed to coolant or the like.
- For easy maintenance, mount the sensor at a position where it can be replaced easily.
- Ensure that no vibration greater than 1 G is applied to the sensor circuit.
- Ground the sensor circuit. The bottom of the sensor circuit is not painted. So, the circuit can be grounded only by screwing.
- Fasten the cables to the machine near the sensor heads so that no load is applied directly to the sensor heads.
- All αiCZ sensor cables are of movable type.

αiCZ sensor 768 I

Speed, resolution, precision, and electrical specifications

Item	Min.	Typ.	Max.	Unit
Speed			10,000	min^{-1}
Resolution		1/3,600,000		Revolution
Precision		±3		Second
Repetition precision		±1		Second
Power supply voltage	4.5	5	5.25	V
Current consumption		150		mA
Water and dust proof class		IP67		

Dimensions

αiCZ sensor 768 I
A860-2161-T511

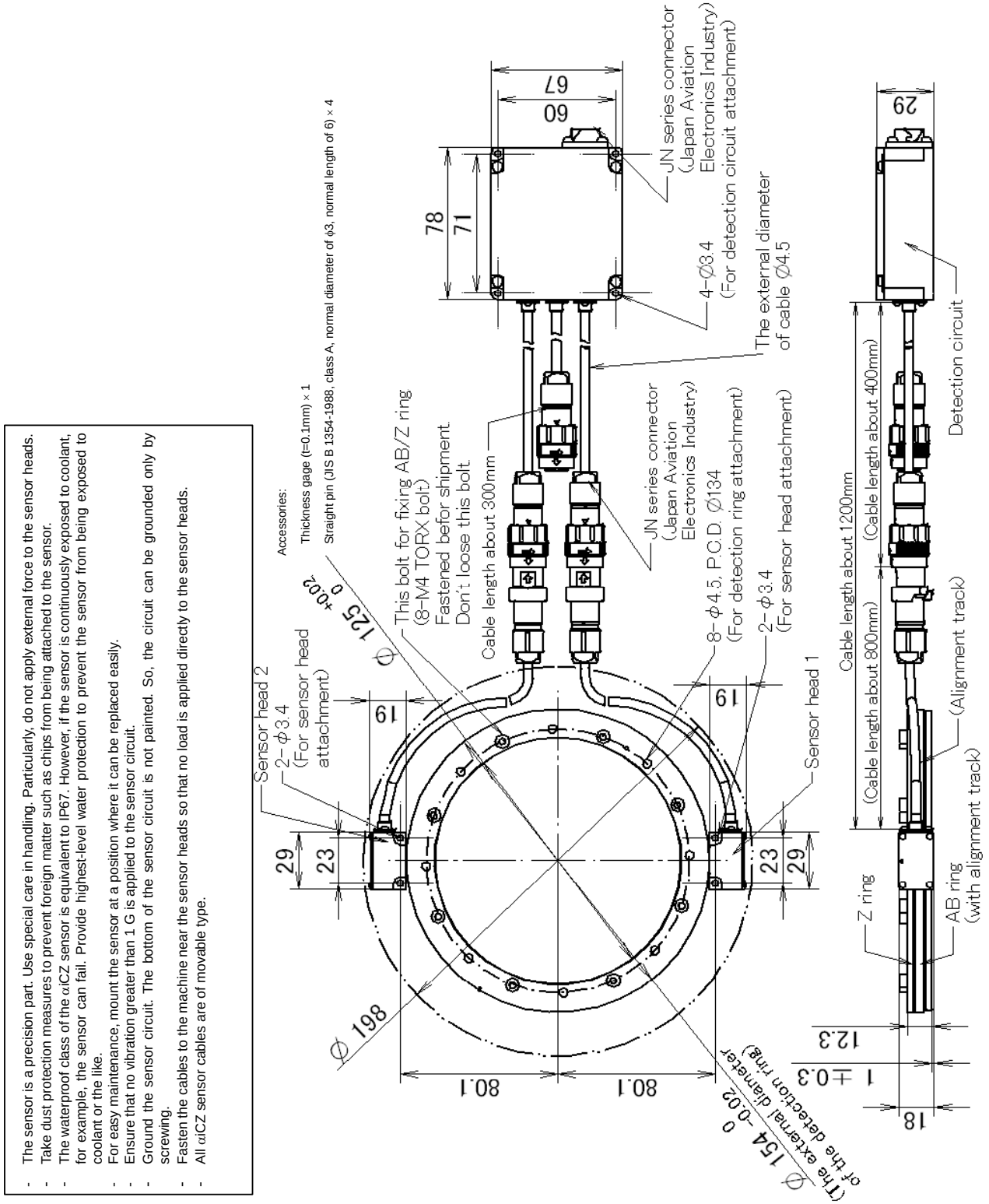

- The sensor is a precision part. Use special care in handling. Particularly, do not apply external force to the sensor heads.
- Take dust protection measures to prevent foreign matter such as chips from being attached to the sensor.
- The waterproof class of the αiCZ sensor is equivalent to IP67. However, if the sensor is continuously exposed to coolant, for example, the sensor can fail. Provide highest-level water protection to prevent the sensor from being exposed to coolant or the like.
- For easy maintenance, mount the sensor at a position where it can be replaced easily.
- Ensure that no vibration greater than 1 G is applied to the sensor circuit.
- Ground the sensor circuit. The bottom of the sensor circuit is not painted. So, the circuit can be grounded only by screwing.
- Fasten the cables to the machine near the sensor heads so that no load is applied directly to the sensor heads.
- All αiCZ sensor cables are of movable type.

αiCZ sensor 1024 I

Speed, resolution, precision, and electrical specifications

Item	Min.	Typ.	Max.	Unit
Speed			8,000	min^{-1}
Resolution		1/3,600,000		Revolution
Precision		±2		Second
Repetition precision		±1		Second
Power supply voltage	4.5	5	5.25	V
Current consumption		150		mA
Water and dust proof class		IP67		

Dimensions

αiCZ sensor 1024 I
A860-2161-T611

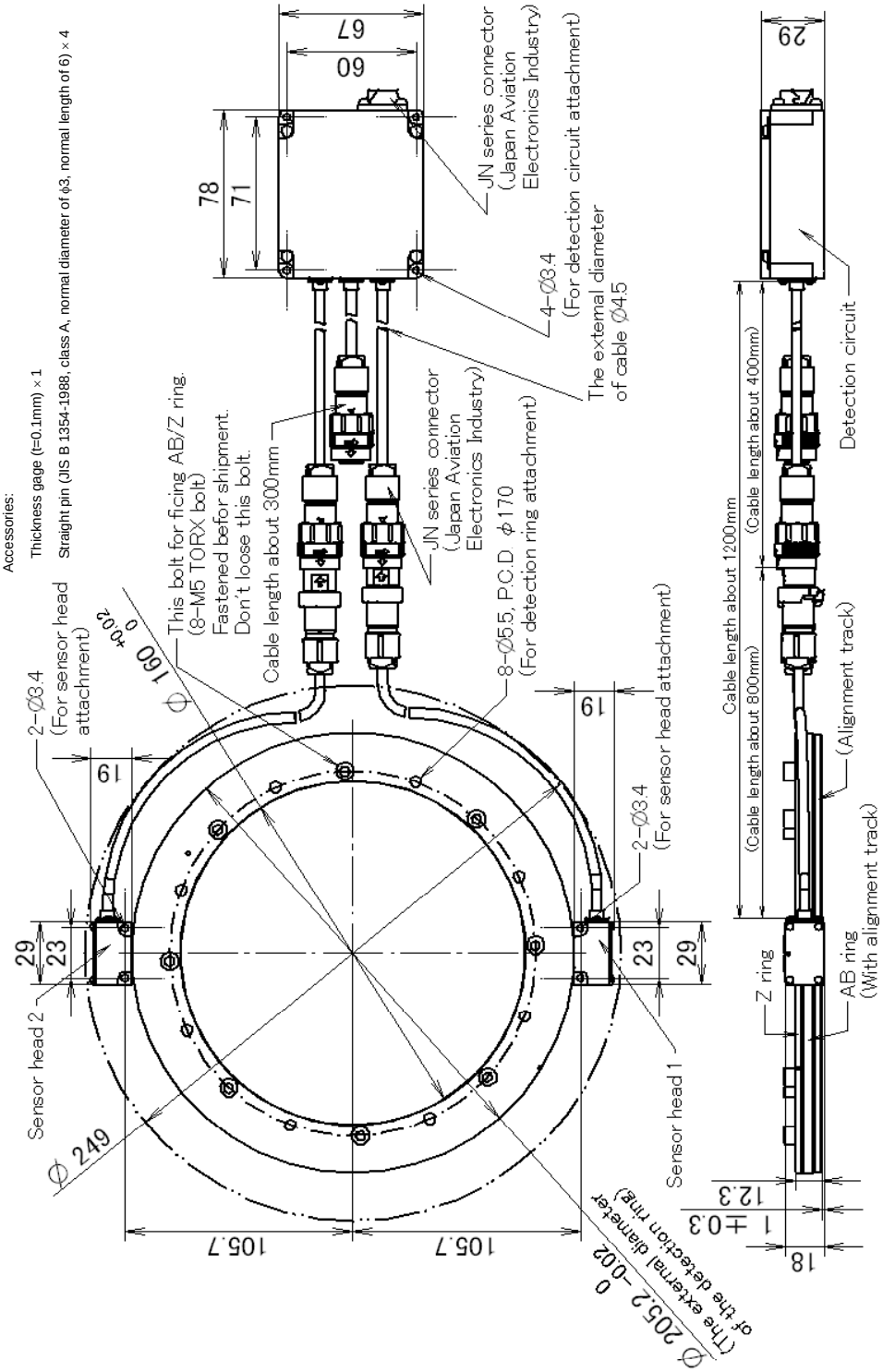

- The sensor is a precision part. Use special care in handling. Particularly, do not apply external force to the sensor heads.
- Take dust protection measures to prevent foreign matter such as chips from being attached to the sensor.
- The waterproof class of the αiCZ sensor is equivalent to IP67. However, if the sensor is continuously exposed to coolant, for example, the sensor can fail. Provide highest-level water protection to prevent the sensor from being exposed to coolant or the like.
- For easy maintenance, mount the sensor at a position where it can be replaced easily.
- Ensure that no vibration greater than 1 G is applied to the sensor circuit.
- Ground the sensor circuit. The bottom of the sensor circuit is not painted. So, the circuit can be grounded only by screwing.
- Fasten the cables to the machine near the sensor heads so that no load is applied directly to the sensor heads.
- All αiCZ sensor cables are of movable type.

[αiCZ sensor (for spindle) A860-2163-T***]

αiCZ sensor 512 IS

Mechanical and electrical specifications

Item	Min.	Typ.	Max.	Unit
Speed			15,000	min^{-1}
Resolution		1/3,600,000		Revolution
Precision		±4		Second
Repetition precision		±1		Second
Power supply voltage	4.5	5	5.25	V
Current consumption		150		mA
Water and dust proof class		IP67		

Dimensions

αiCZ sensor 512 IS
A860-2163-T411

- The sensor is a precision part. Use special care in handling. Particularly, do not apply external force to the sensor heads.
- Take dust protection measures to prevent foreign matter such as chips from being attached to the sensor.
- The waterproof class of the αiCZ sensor is equivalent to IP67. However, if the sensor is continuously exposed to coolant, for example, the sensor can fail. Provide highest-level water protection to prevent the sensor from being exposed to coolant or the like.
- For easy maintenance, mount the sensor at a position where it can be replaced easily.
- Ensure that no vibration greater than 1 G is applied to the sensor circuit.
- Ground the sensor circuit. The bottom of the sensor circuit is not painted. So, the circuit can be grounded only by screwing.
- Fasten the cables to the machine near the sensor heads so that no load is applied directly to the sensor heads.
- All αiCZ sensor cables are of movable type.

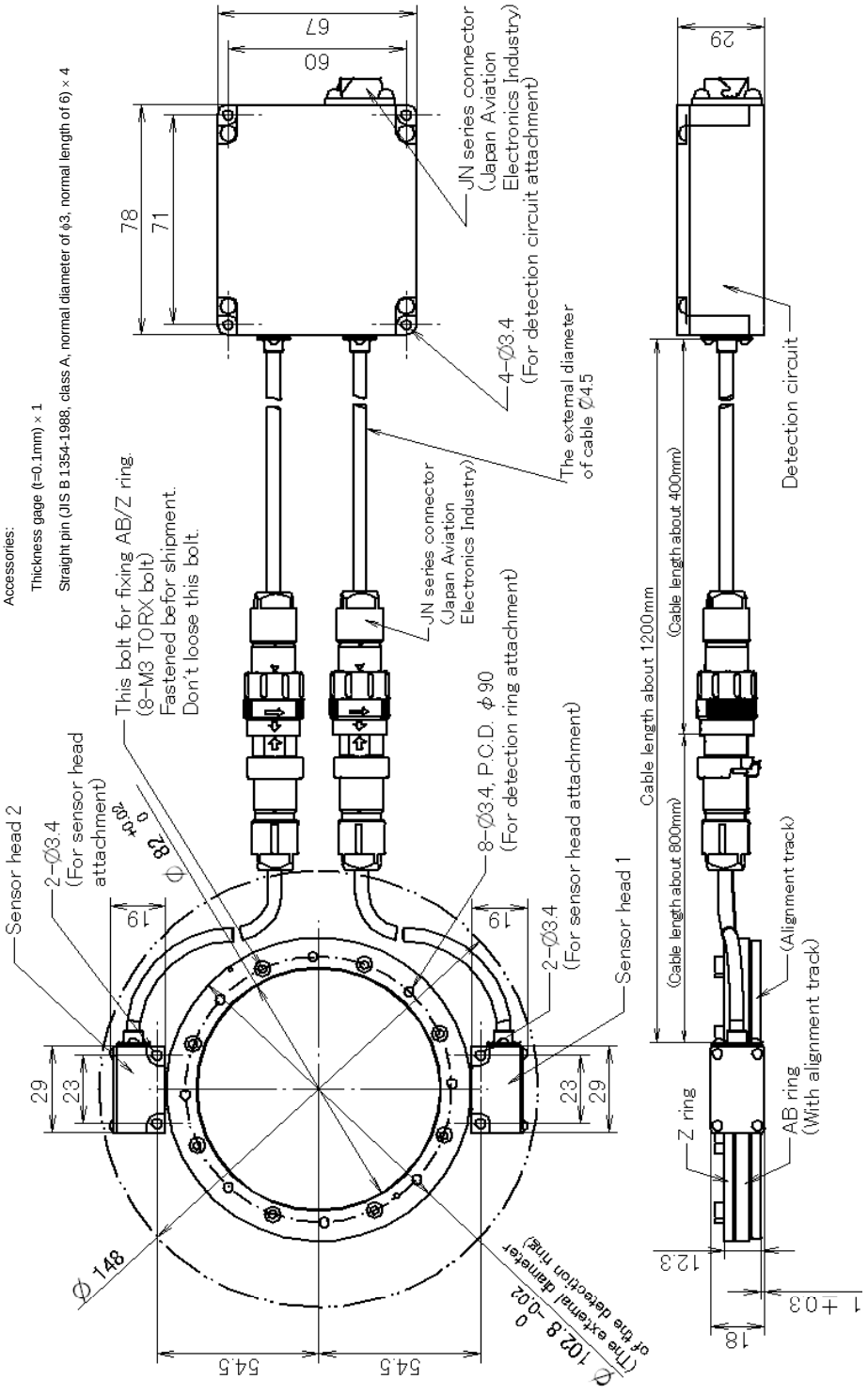

αiCZ sensor 768 IS
Speed, resolution, precision, and electrical specifications

Item	Min.	Typ.	Max.	Unit
Speed			10,000	min^{-1}
Resolution		1/3,600,000		Revolution
Precision		±3		Second
Repetition precision		±1		Second
Power supply voltage	4.5	5	5.25	V
Current consumption		150		mA
Water and dust proof class		IP67		

Dimensions

αiCZ sensor 768 IS
A860-2163-T511

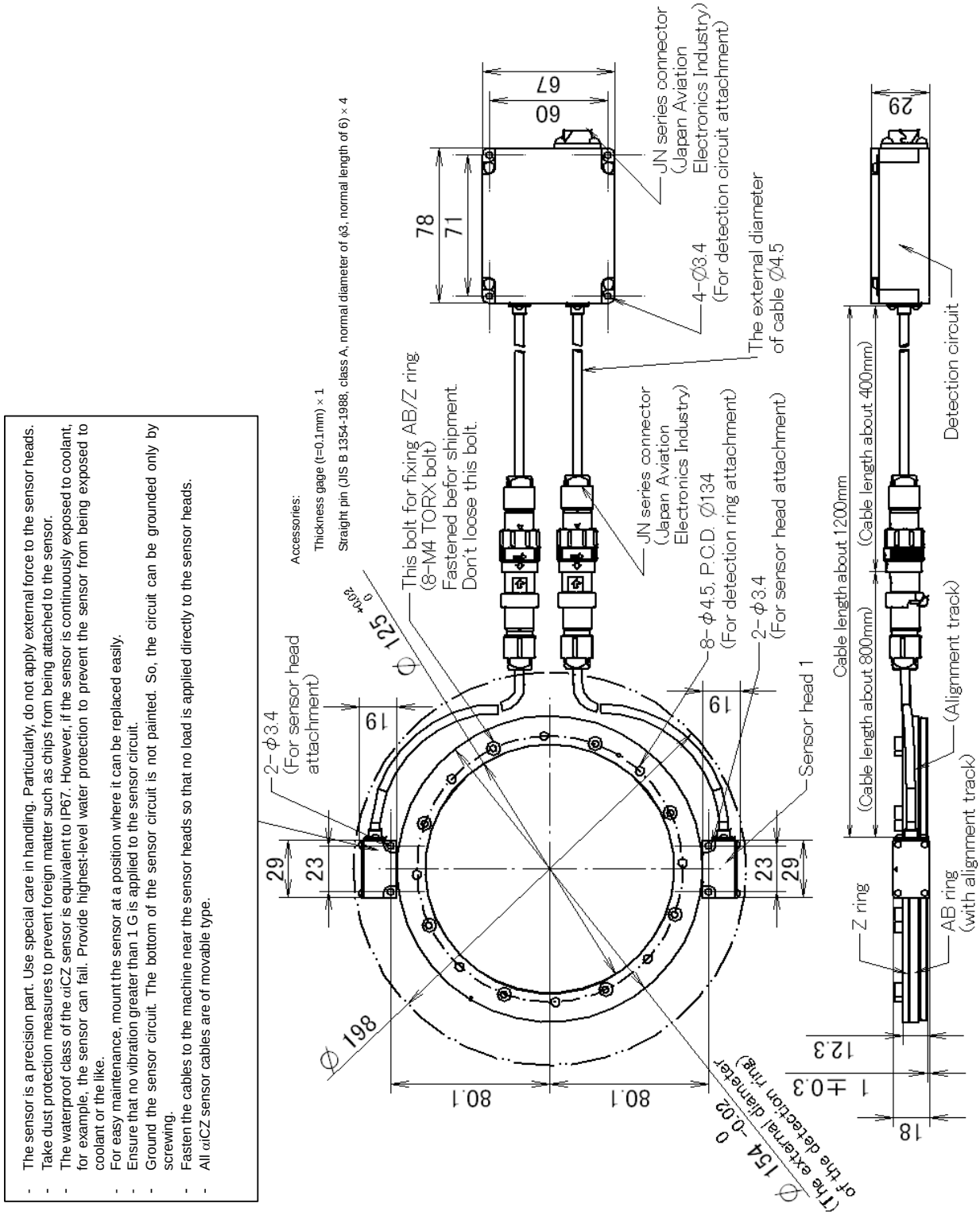

- The sensor is a precision part. Use special care in handling. Particularly, do not apply external force to the sensor heads.
- Take dust protection measures to prevent foreign matter such as chips from being attached to the sensor.
- The waterproof class of the αiCZ sensor is equivalent to IP67. However, if the sensor is continuously exposed to coolant, for example, the sensor can fail. Provide highest-level water protection to prevent the sensor from being exposed to coolant or the like.
- For easy maintenance, mount the sensor at a position where it can be replaced easily.
- Ensure that no vibration greater than 1 G is applied to the sensor circuit.
- Ground the sensor circuit. The bottom of the sensor circuit is not painted. So, the circuit can be grounded only by screwing.
- Fasten the cables to the machine near the sensor heads so that no load is applied directly to the sensor heads.
- All αiCZ sensor cables are of movable type.

αiCZ sensor 1024 IS
Speed, resolution, precision, and electrical specifications

Item	Min.	Typ.	Max.	Unit
Speed			8,000	min^{-1}
Resolution		1/3,600,000		Revolution
Precision		±2		Second
Repetition precision		±1		Second
Power supply voltage	4.5	5	5.25	V
Current consumption		150		mA
Water and dust proof class		IP67		

Dimensions

αiCZ sensor 1024 IS
A860-2163-T611

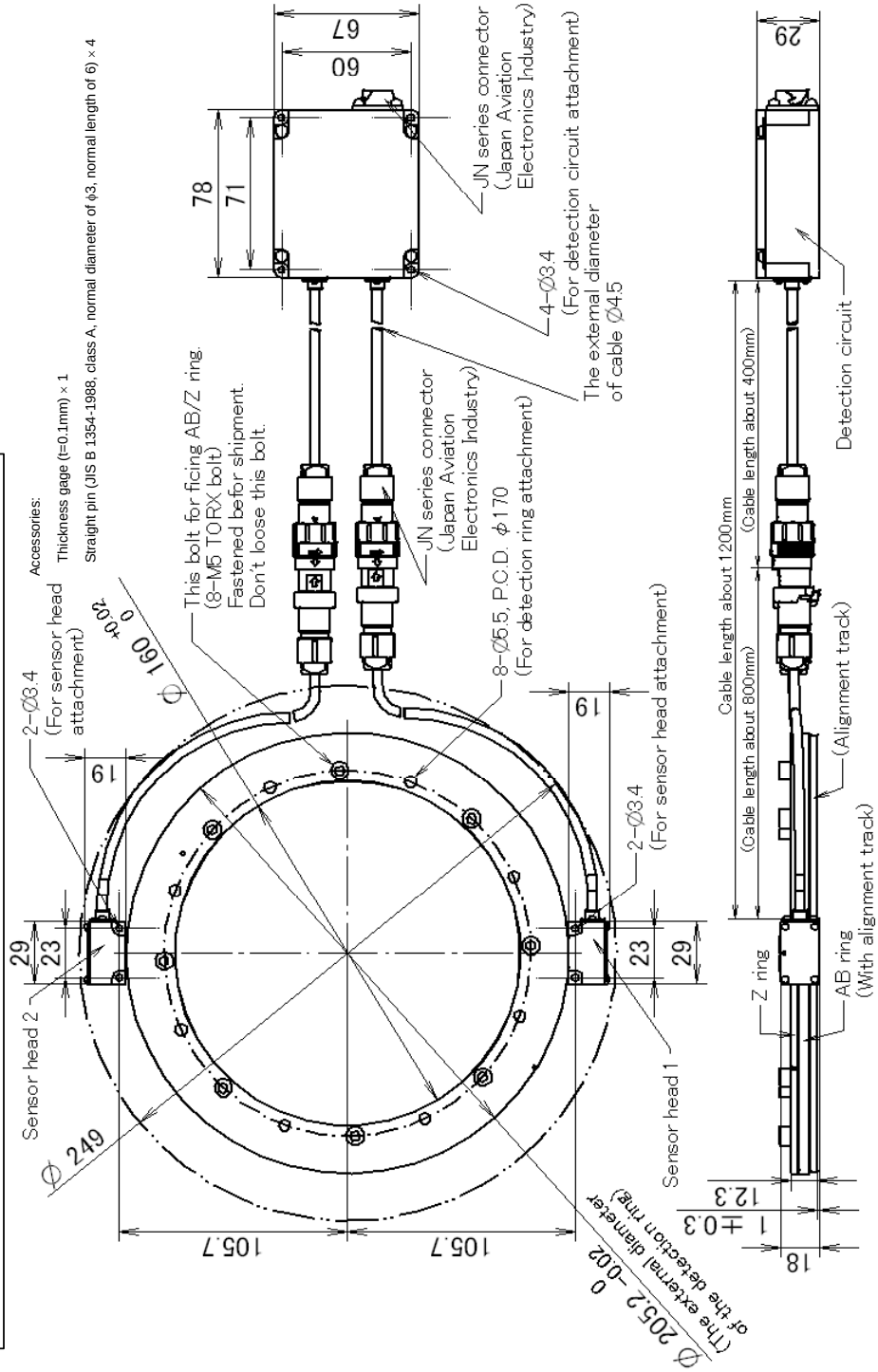

- The sensor is a precision part. Use special care in handling. Particularly, do not apply external force to the sensor heads.
- Take dust protection measures to prevent foreign matter such as chips from being attached to the sensor.
- The waterproof class of the αiCZ sensor is equivalent to IP67. However, if the sensor is continuously exposed to coolant, for example, the sensor can fail. Provide highest-level water protection to prevent the sensor from being exposed to coolant or the like.
- For easy maintenance, mount the sensor at a position where it can be replaced easily.
- Ensure that no vibration greater than 1 G is applied to the sensor circuit.
- Ground the sensor circuit. The bottom of the sensor circuit is not painted. So, the circuit can be grounded only by screwing.
- Fasten the cables to the machine near the sensor heads so that no load is applied directly to the sensor heads.
- All αiCZ sensor cables are of movable type.

11.2.3.4 System configuration and connection block diagram

[αiCZ sensor (for built-in spindle motor) A860-2161-T***]

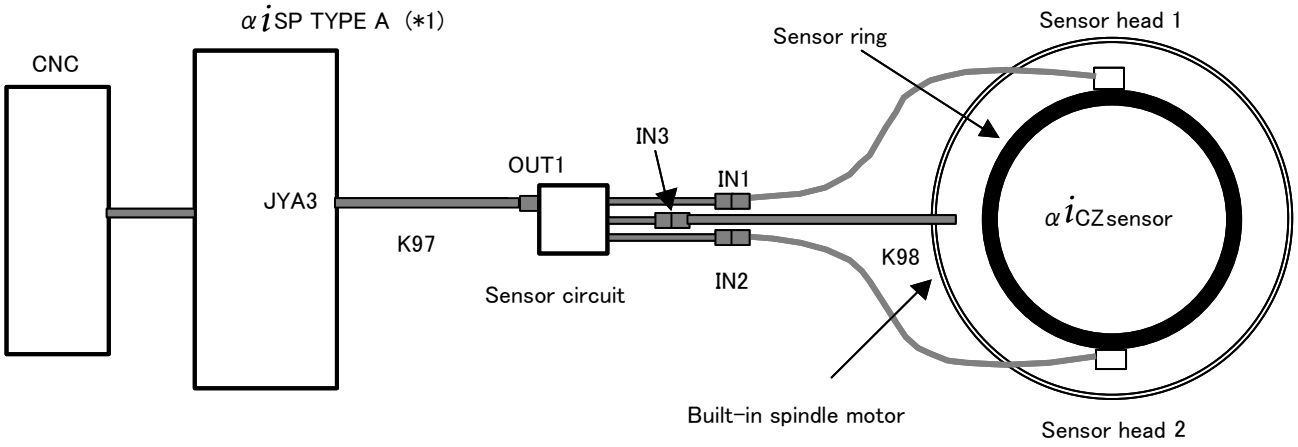

[αiCZ sensor (for spindle) A860-2163-T***]

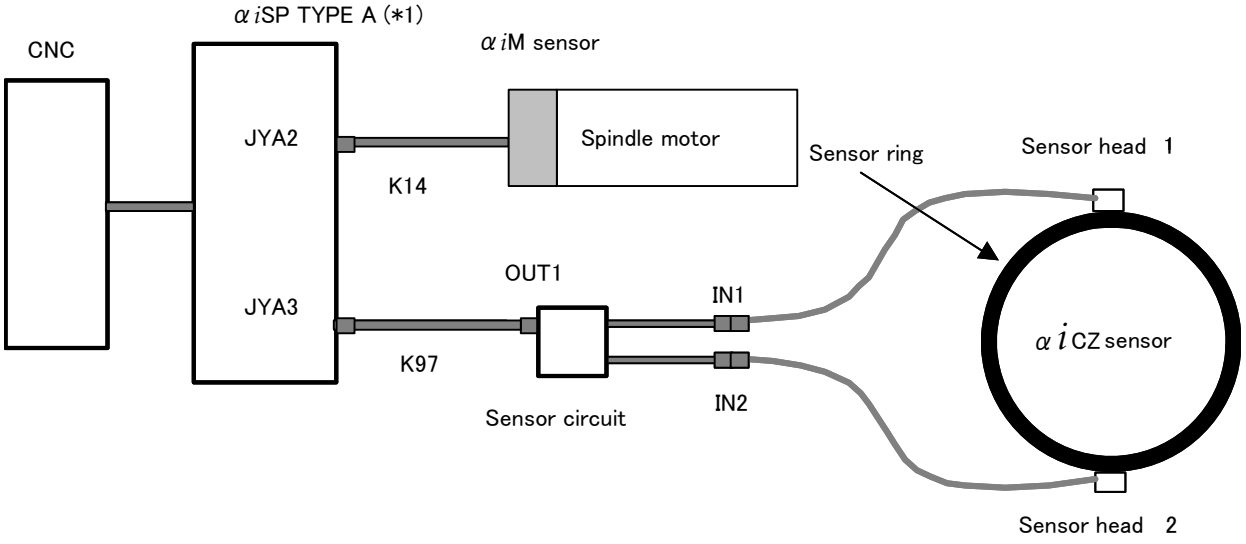

*1) Supported unit drawing numbers and versions

Drawing number	Supported unit version
200V system A06B-6141-H002, -H006, -H011, -H015, -H030, -H037, -H055#H580 400V system A06B-6151-H006, -H011, -H015, -H045, -H075, -H100#H580	Version B or later
200V system A06B-6141-H022, -H026, -H045#H580 400V system A06B-6151-H030#H580	Version C or later

11.2.3.5 Connection specifications

Cable K97

See Subsection 9.3.3 for details of this cable.

Cable K98

Processing of the thermistor line of the built-in spindle motor

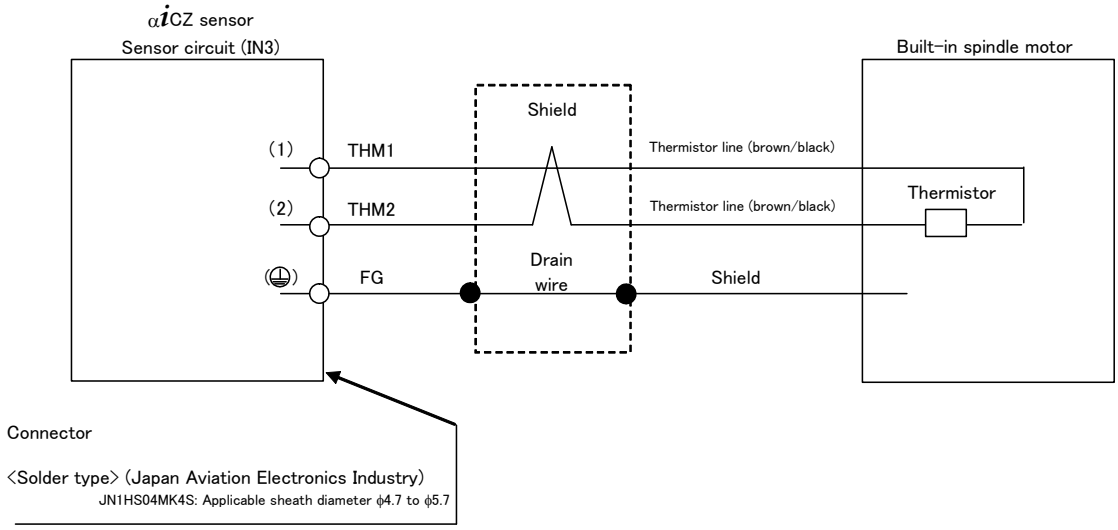

Connector kit
A06B-6111-K203

Method of extending the sensor cables

The sensor cables from the sensor heads to the sensor circuit can be extended up to 4 m as shown in Fig. 11.2.3.5.
The method of extending the sensor cables is described below.

Connection block diagram

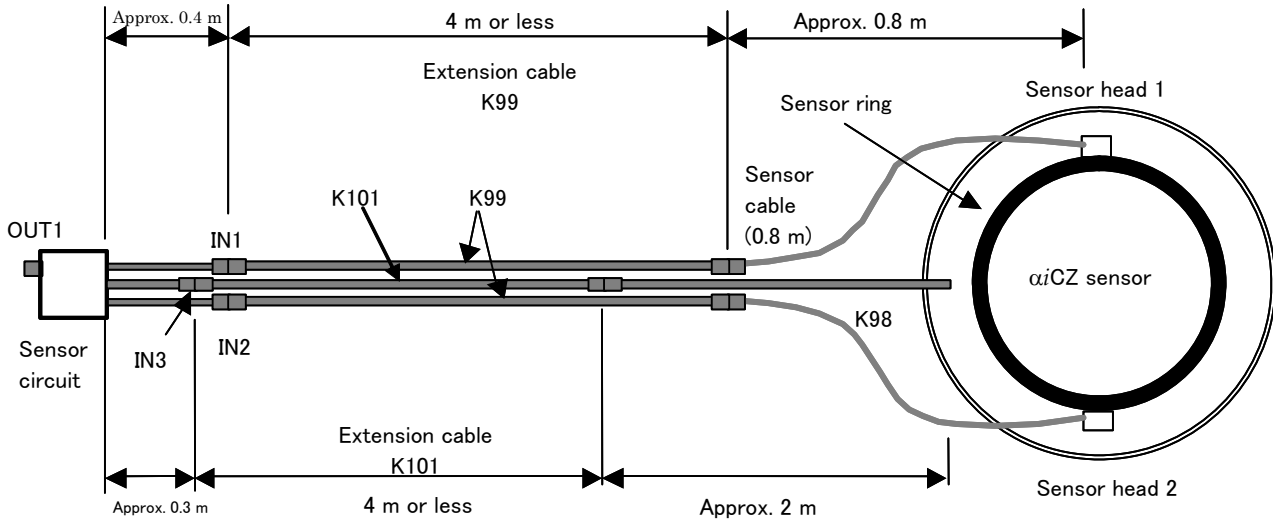

Fig. 11.2.3.5

Cable K99

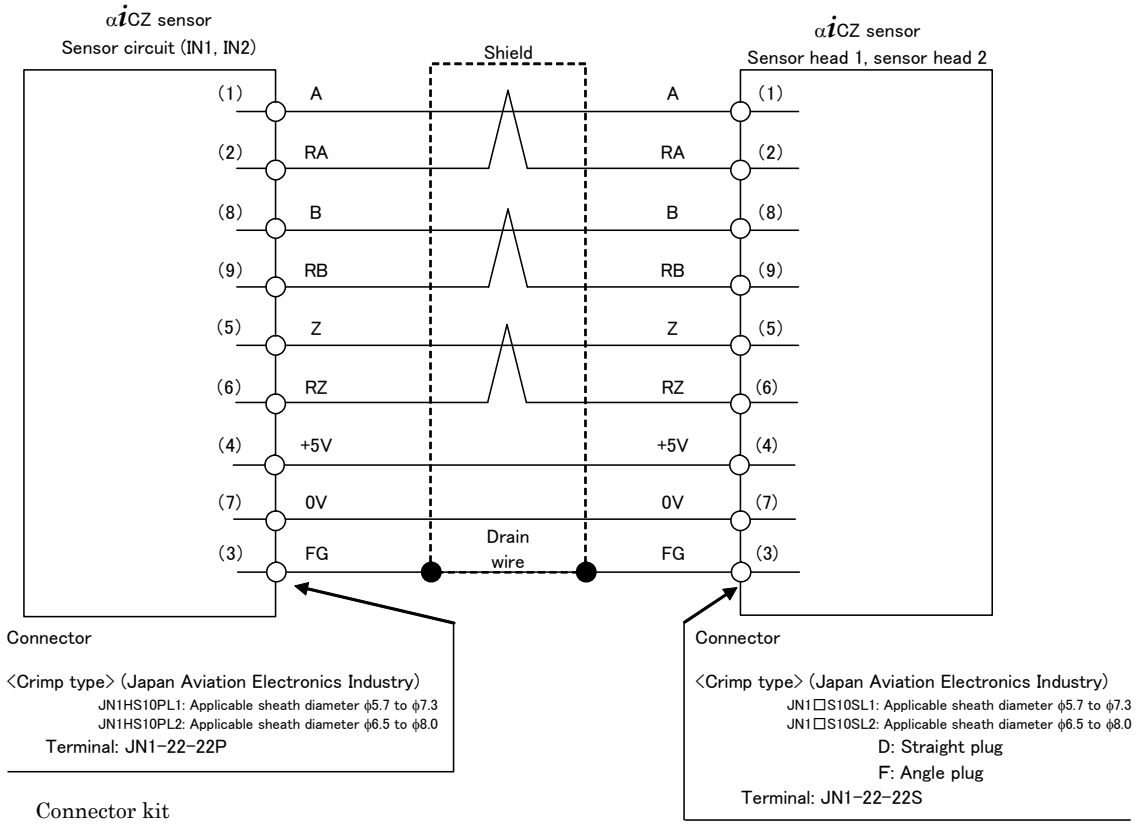

Connector kit
A06B-6114-K206

Connector kit
A06B-6114-K200#S: Straight plug
A06B-6114-K200#E: Angle plug

* Z and RZ are not output from sensor head 2 but may be connected.

Signal name	
5V, 0V	0.5 mm^2 × 2
A, RA, B, RB, Z, RZ	0.2 mm^2 or more Twisted pair
Drain wire	0.15 mm^2 or more

Recommended cable A66L-0001-0482

NOTE
1 When using a cable not recommended, ensure that the sum of the resistance values of 0 V and 5 V does not exceed 2 Ω.
2 Run the power and signal lines so that the lines are not parallel with each other.

Cable K101

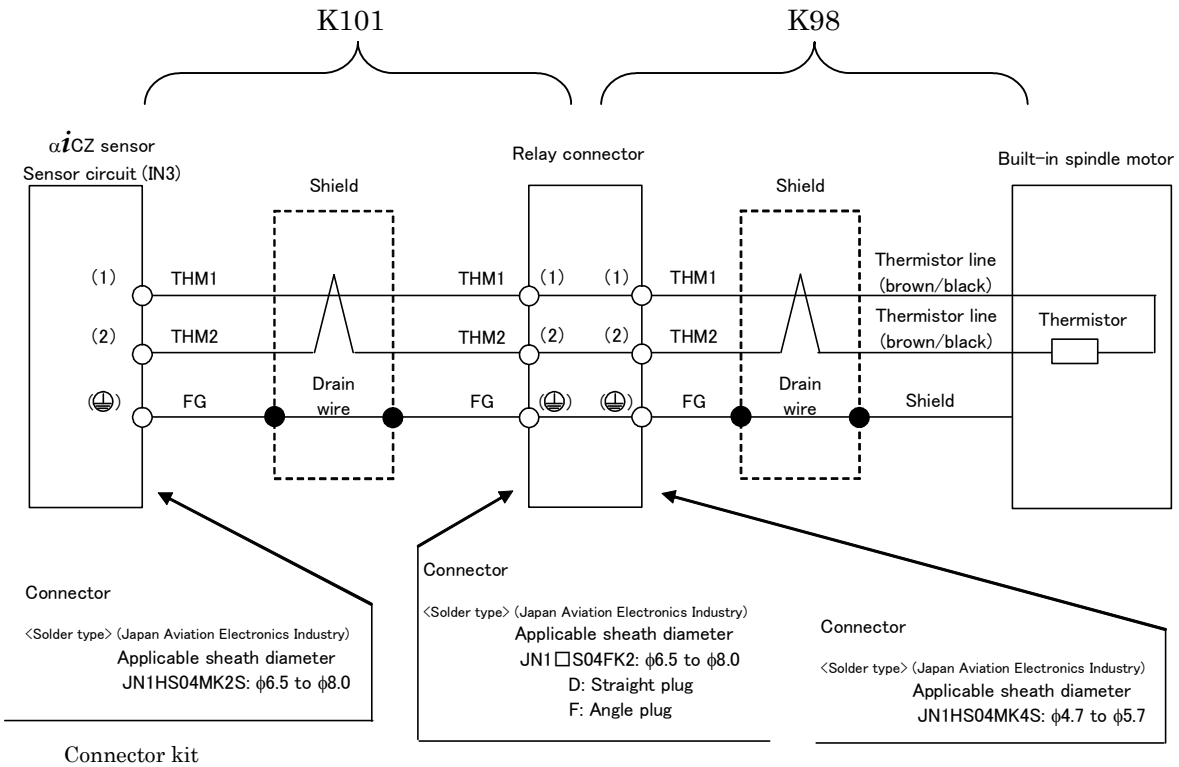

Connector kit
A06B-6111-K203

Connector kit
A06B-6114-K210#S: Straight plug
A06B-6114-K210#E: Angle plug

Connector kit
A06B-6111-K203

Recommended wire THM1, THM2, OH1, OH2 0.2 mm^2
Recommended cable A66L-0001-0482

11.2.3.6 Rotation direction of the αiCZ sensor

* The description below is applicable to both of A860-2161-T*** and A860-2163-T***.

When the sensor is viewed from the top as shown in the following figure, clockwise rotation of the sensor ring is referred to as forward rotation:

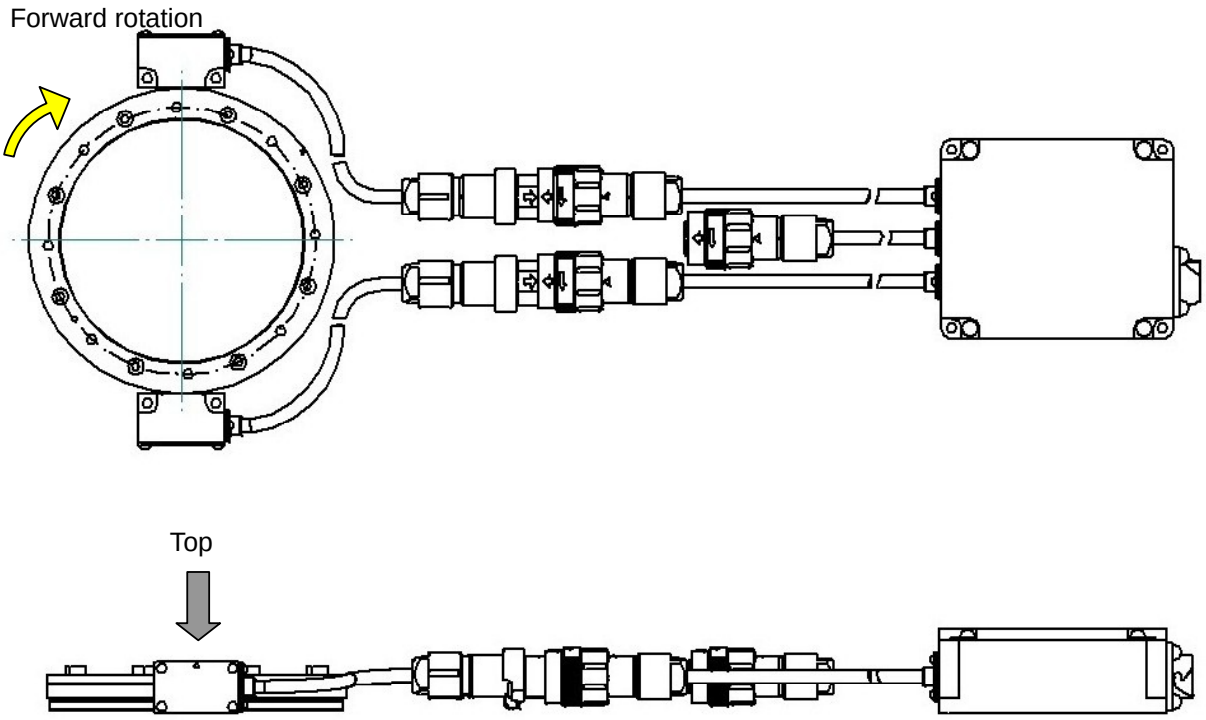

11.2.3.7 Machine start-up procedure (outline)

* The description below is applicable to both of A860-2161-T*** and A860-2163-T***.

This subsection indicates the procedure for incorporating the αiCZ sensor into the machine.

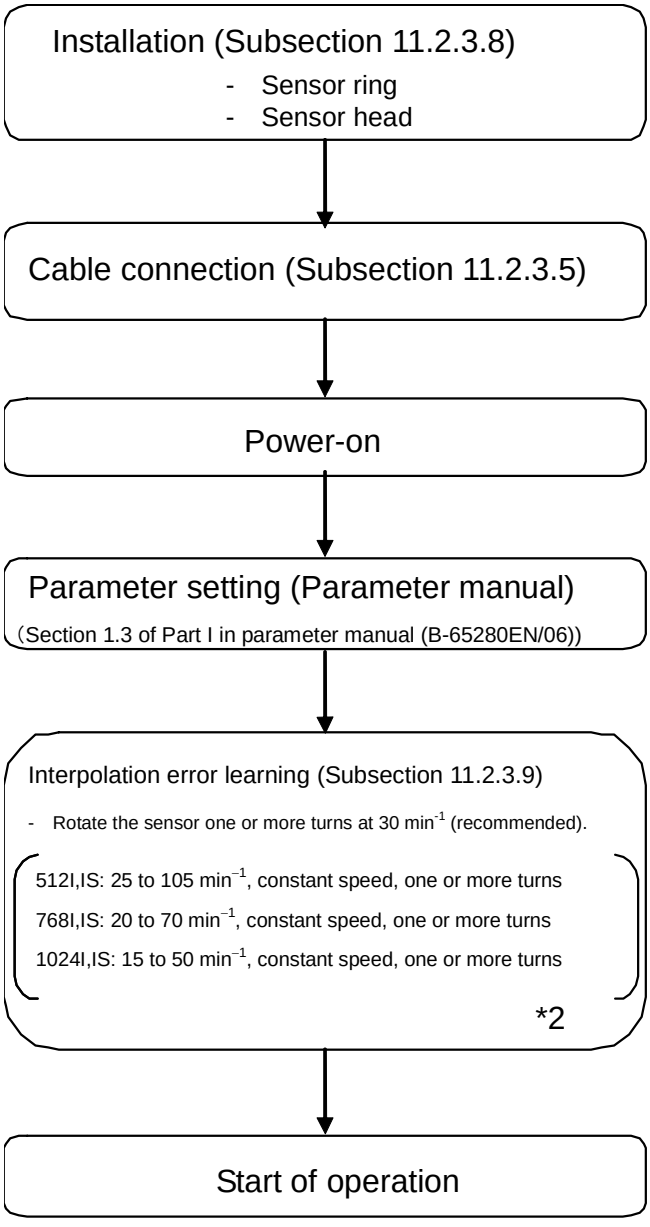

(*1) The method of checking output signals is described in Subsection 11.2.3.12.

(*2) Interpolation error learning needs to be performed not only at machine start-up time but also at the time of each power-on operation and at the time of each recovery operation from an alarm indicated in Subsection 11.2.3.13. (If interpolation error learning is not performed, degraded precision may result.)

11.2.3.8 Installation

* The description below is applicable to both of A860-2161-T*** and A860-2163-T***.

Overview

Install the αiCZ sensor according to the procedure below.

<1> Machine the sensor mounting surface as necessary then insert the straight pins.
<2> Mount the sensor ring onto the shaft (or sleeve) of the machine, center the sensor ring, then fasten the ring with screws.
<3> Adjust the gap between the sensor heads and sensor ring then mount the sensor heads onto the machine.

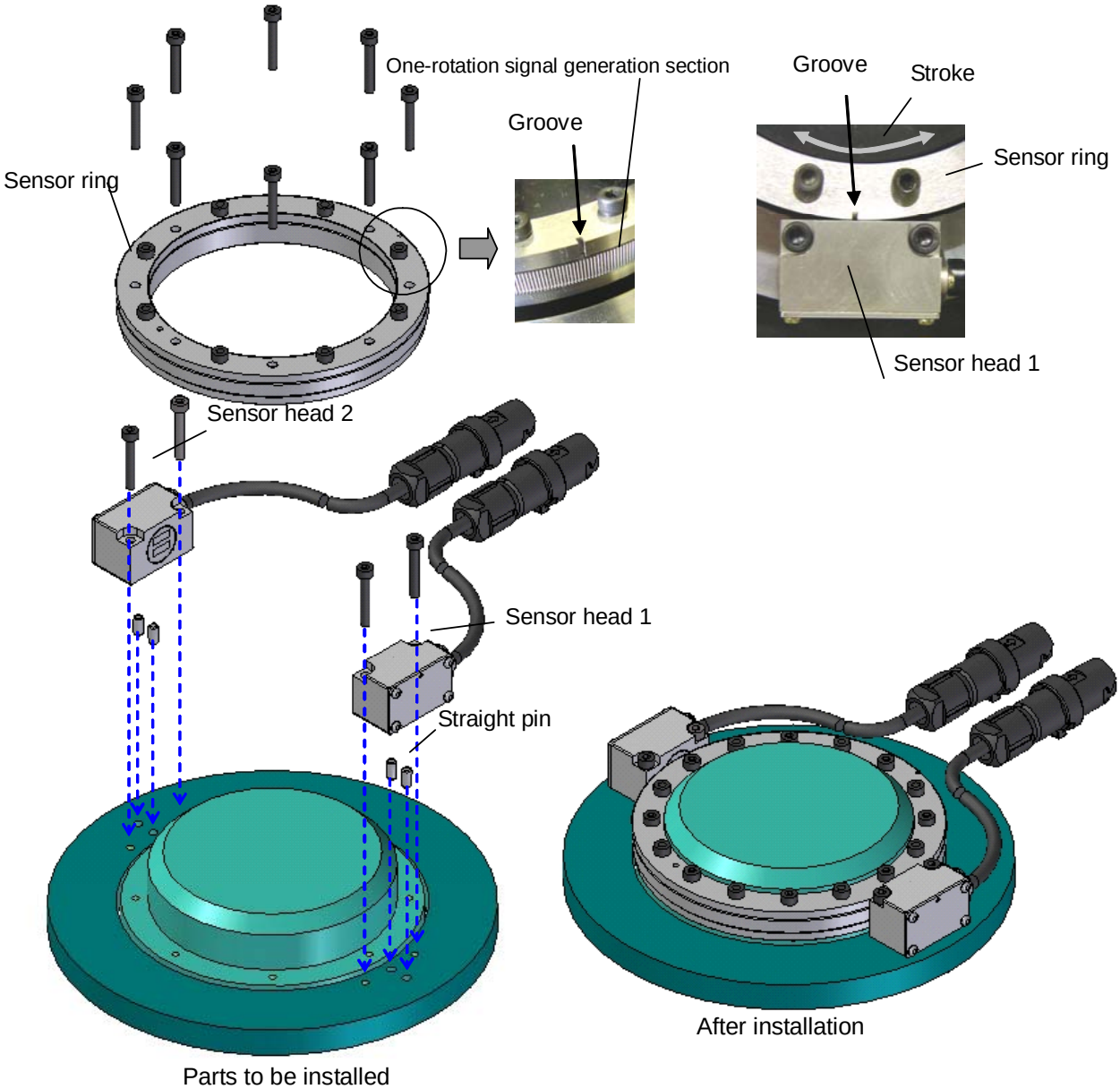

* Ensure that the groove of the one-rotation signal generation section of the sensor ring passes sensor head 1 within the stroke.

Dimensions of the sensor head mounting plane

The dimensions of the sensor head mounting plane are indicated below. Insert straight pins (JIS B 1354-1988, class A, normal diameter of ϕ3, normal length of 6) into the 2-ϕ3H6 holes. The straight pins are used as the guide for gap adjustment described later.

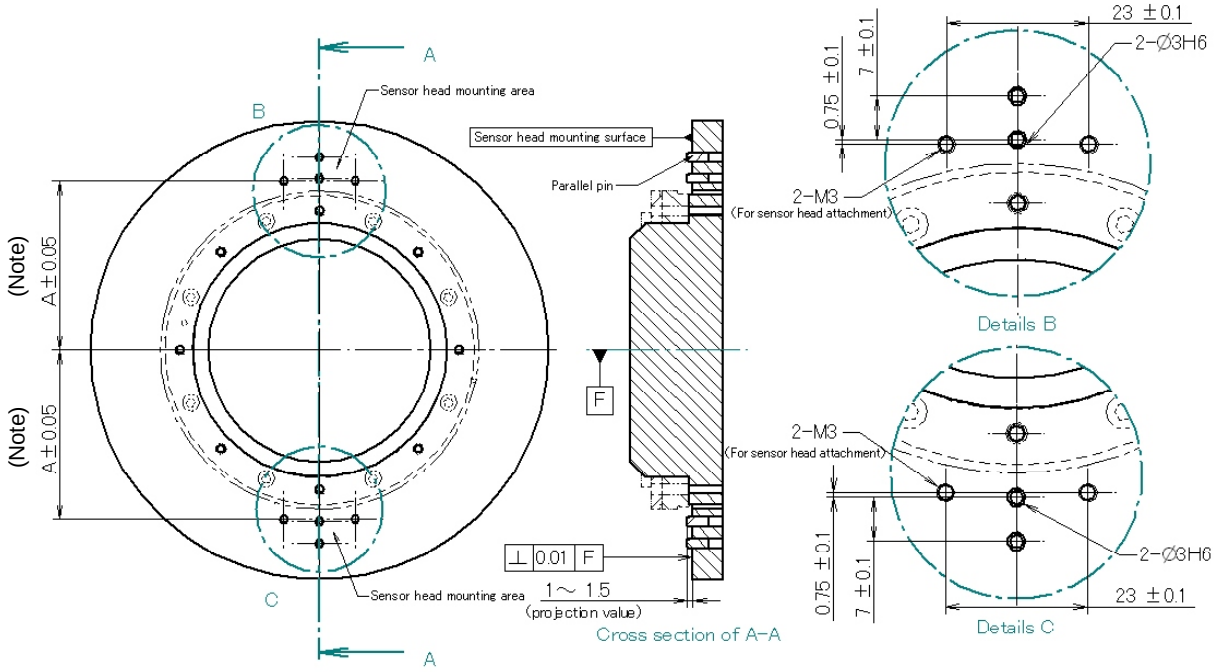

Dimension A

= (Sensor ring outer diameter)/2+3.1

(NOTE) In designing, make sure that the positions of the taps for fastening the sensor heads after machine assembly, in stead of the part having the sensor head mounting plane, satisfy these dimensions.

Installing the sensor ring

Center the sensor ring by using the centering track so that the runout to the rotation center is 0.01 mm or less. Moreover, in designing, ensure that in the direction along the shaft, the sensor ring mounting plane is 1 ±0.3 mm off the sensor head mounting plane. Ensure also that the perpendicularity of the sensor ring mounting plane is 0.01 mm or less from the rotation center. Apply a thread locker or the like to the screws to prevent the screws from becoming loose.

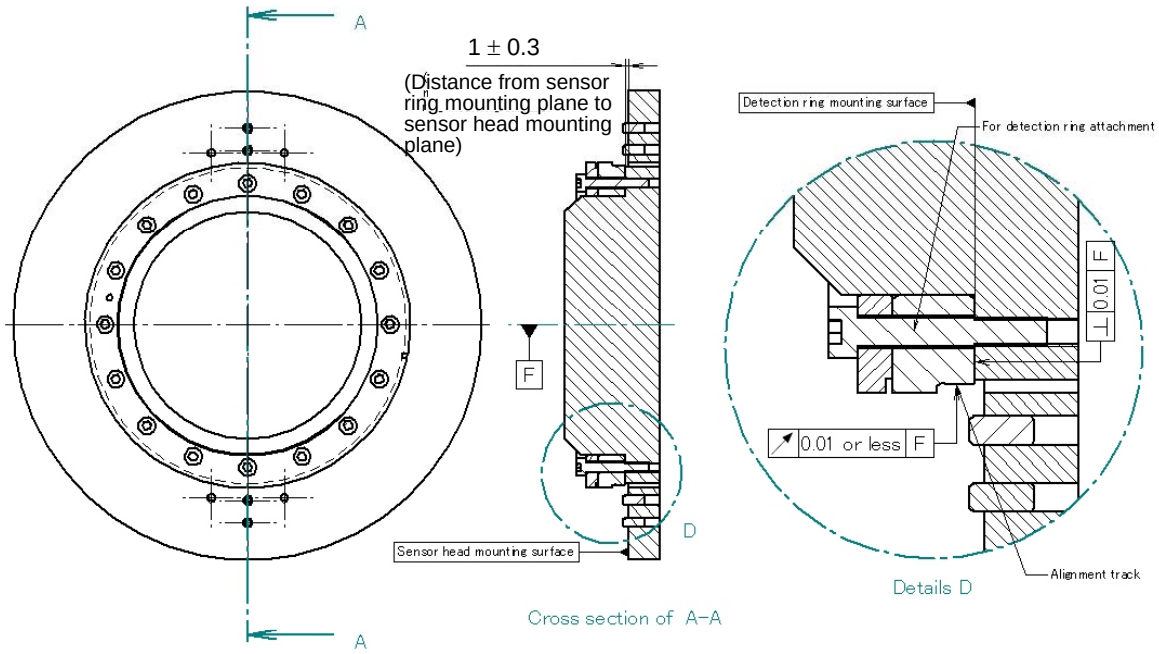

Specification	Outer diameter of centering track (mm)	Positions of sensor ring mounting holes	Mounting screw	Recommended tightening torque (Nm)
A860-2161-T411 A860-2163-T411	ϕ101	8-ϕ3.4 through, equally spaced on ϕ90 circumference	M3	1.5±5%
A860-2161-T511 A860-2163-T511	ϕ152.2	8-ϕ4.5 through, equally spaced on ϕ134 circumference	M4	3.0±5%
A860-2161-T611 A860-2163-T611	ϕ203.4	8-ϕ5.5 through, equally spaced on ϕ170 circumference	M5	6.0±5%

NOTE

- For centering, the outer diameter of the shaft (or sleeve) must be designed so that there is a gap of about 0.1 mm on one side between the outer surface of the shaft (or sleeve) and the inner surface of the sensor ring.
- Secure the sensor ring on an end face with screws (avoid shrink fitting to mount the sensor ring).
- The sensor ring consists of a phase Z ring and phase A/B ring, which are fastened together by using screws in advance. Never detach these screws. Spot facing is not provided. So, at the time of machine design, be careful not to cause interference with the screw heads.
- Centering must be performed with the centering track (the outer surface of the phase Z ring and the teeth pitch circle are not coaxial). When performing centering, use a tool such as a plastic hammer not to damage the gear teeth.
- Magnetic matter attached to gear teeth can lead to a detection error. After centering is completed, remove such foreign matter by air blowing. (See Section 12.1.)
- If the sensor ring is tightened with excessive torque, elastic deformation can occur in the sensor ring, resulting in deterioration in detection precision. Use the recommended tightening torque when mounting the sensor ring.

Installing the sensor head

Install the sensor heads according to the procedure below. (The same procedure is applicable to sensor head 1 and sensor head 2.)

1. Place the sensor head on the sensor mounting surface so that the straight pins are positioned in the slot of the sensor head, and fasten the sensor head temporarily. The magnet in the sensor head and the sensor ring attract each other. When installing the sensor head, be careful not to hit the sensor head against the sensor ring with the thickness gage not placed between them (impact can damage elements in the sensor head).

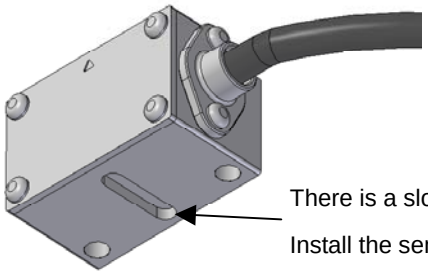

2. Insert the thickness gage (supplied as an accessory, t = 0.1 mm) between the sensor ring and the sensor head, and while lightly pressing the sensor head against the thickness gage, tighten the screws (recommended tightening torque: 1.3 Nm ±10%). Apply a thread locker or the like to the screws to prevent them from becoming loose.

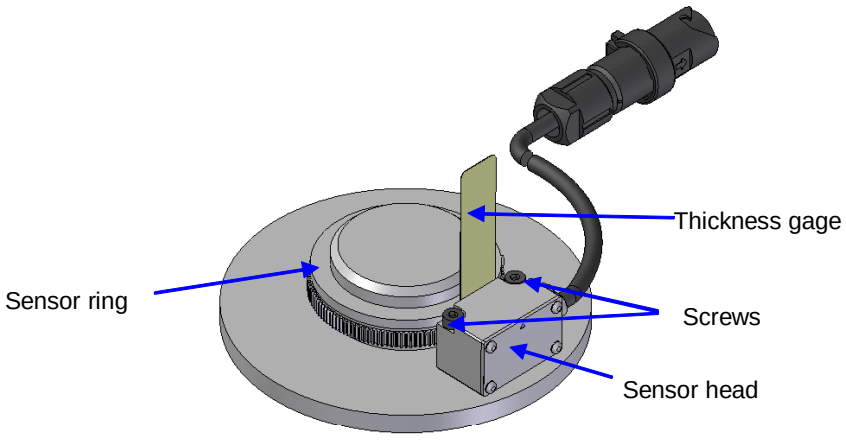

3. Pull out the thickness gage, and slowly turn the sensor ring to ensure that the sensor ring and the sensor head do not touch each other.

11.2.3.9 Interpolation error learning

* The description below is applicable to both of A860-2161-T*** and A860-2163-T***.

- The α*i*CZ sensor includes an automatic interpolation correction circuit that automatically learns interpolation errors and corrects them. When learning conditions are satisfied, learning is performed automatically. When the sensor rotates one or more turns, learning is completed. The learning conditions vary depending on the model. For any model, however, learning at 30 min^{-1} is recommended.
- For interpolation error learning, be sure to rotate the sensor under the following conditions after the power is turned on:

(Learning conditions)

α*i*CZ sensor 512I, 512IS : 25 to 105 min^{-1}, constant speed, one or more turns

α*i*CZ sensor 768I, 768IS : 20 to 70 min^{-1}, constant speed, one or more turns

α*i*CZ sensor 1024I, 1024IS : 15 to 50 min^{-1}, constant speed, one or more turns

Recommended learning conditions

Common to thee models : 30 min^{-1}, constant speed, one or more turns

- While power is supplied to the αiCZ sensor, interpolation error learning data is maintained in the sensor. When the power is removed, the data is not maintained. Learning data is lost also when a spindle alarm is issued.
- To ensure precision, rotate the sensor under the automatic learning conditions after each power-on operation.
- When learning is not completed, the detection precision of the α*i*CZ sensor may deteriorate.
- If it is difficult to rotate the sensor at least one turn for interpolation error learning, repeat forward and reverse rotations under the above rotation conditions until the sum of angular displacements in one direction becomes one turn or more.

11.2.3.10 Notes

Magnetic powder attached to the sensor ring

* The description below is applicable to both of A860-2161-T*** and A860-2163-T***.

The αiCZ sensor detects an angular displacement according to a change in magnetic flux density between the sensor heads and sensor ring. So, if magnetic powder is attached to a location of the sensor ring, the magnetic flux density at that location changes locally, deteriorating the precision of detection. This precision deterioration occurs each time the location to which magnetic powder is attached passes sensor head 1 and sensor head 2, that is, at every 180°. This deterioration leads to an increased positioning error, torque command variation, abnormal sound, vibration, and so forth.

After installing the sensor, be sure to blow the sensor ring by air. Moreover, to prevent magnetic powder and chips from being attached to the sensor ring and sensor heads during operation, provide protection against dust and water on the machine side.

If nonmagnetic matter (such as aluminum, austenitic stainless steel, resin, and oil) is attached to the sensor ring and sensor head, such precision deterioration as mentioned above does not occur. However, foreign matter caught between the sensor ring and a sensor head can mechanically damage the sensor head. So, attachment of foreign matter, even if nonmagnetic, is undesirable.

11.2.3.11 Maintenance target parts

As shown below, the α*i*CZ sensor consists of four parts: sensor ring (phase A/B ring and phase Z ring coupled by screws), sensor head 1, sensor head 2, and sensor circuit. Each single part can be maintained separately. So, place an order on each part as needed according to the specification numbers indicated below.

[α*i*CZ sensor (for built-in spindle motor) A860-2161-T***]

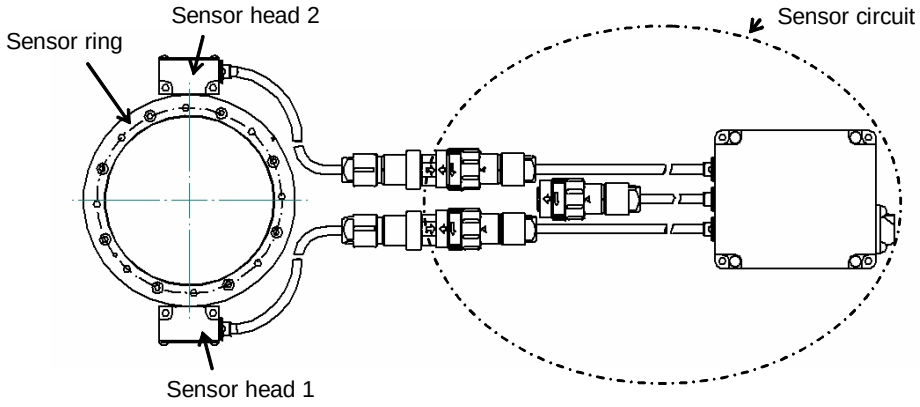

Parent specification / Part specification	α*i*CZ sensor 512I A860-2161-T411	α*i*CZ sensor 768I A860-2161-T511	α*i*CZ sensor 1024I A860-2161-T611
Sensor ring	A860-2160-V901	A860-2160-V902	A860-2160-V903
Sensor head 1	A860-2162-V001 (common to all specifications)		
Sensor head 2	A860-2162-V012 (common to all specifications)		
Sensor circuit	A860-2161-V201 (common to all specifications)		

[α*i*CZ sensor (for spindle) A860-2163-T***]

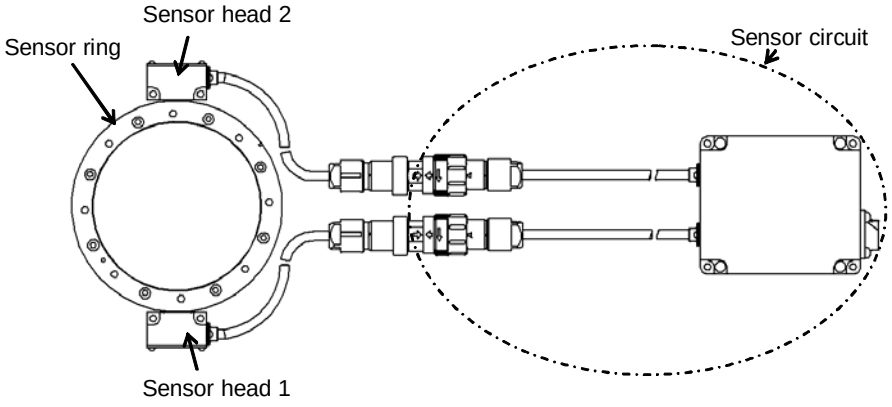

Parent specification / Part specification	α*i*CZ sensor 512IS A860-2163-T411	α*i*CZ sensor 768IS A860-2163-T511	α*i*CZ sensor 1024IS A860-2163-T611
Sensor ring	A860-2160-V901	A860-2160-V902	A860-2160-V903
Sensor head 1	A860-2162-V001 (common to all specifications)		
Sensor head 2	A860-2162-V012 (common to all specifications)		
Sensor circuit	A860-2163-V201 (common to all specifications)		

11.2.3.12 Output signal check method

* The description below is applicable to both of A860-2161-T*** and A860-2163-T***.

When checking the signal waveform directly, see the illustration below.

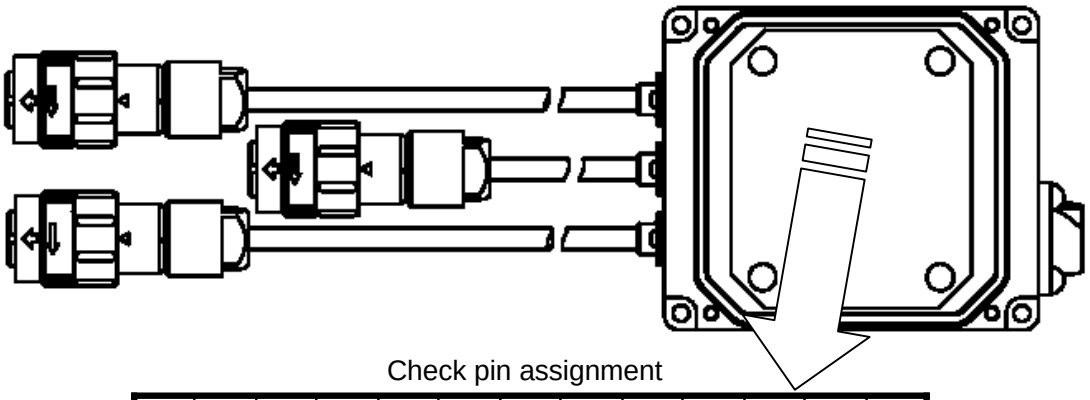

Check pin assignment

0V		A2	B2	T0						0V	5V	

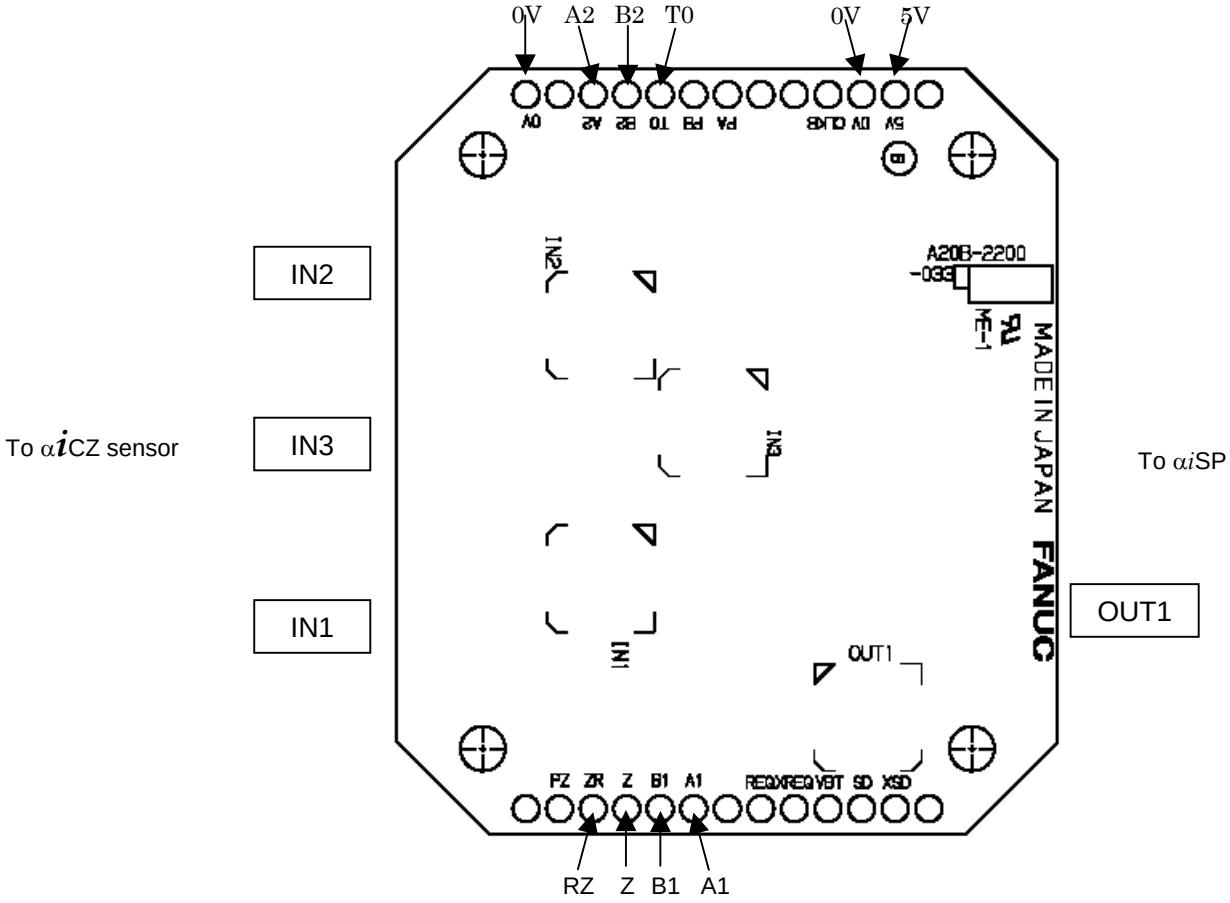

Check pin assignment

		RZ	Z	B1	A1							

- Supply power to the 0 V and 5 V pins.
- The Lissajous figure of the phase A/B output signal is a complete circle.

Phase A/B and phase Z signal waveform (measured on sensor circuit check pins at room temperature and 500 min^{-1})

Signal name	Check pin	Output amplitude	Offset
Sensor head 1 phase A (after amplification) Sensor head 1 phase B (after amplification)	A1 B1	1,300 to 3,000 mVp-p	±180mV
Sensor head 2 phase A (after amplification) Sensor head 2 phase B (after amplification)	A2 B2	1,300 to 3,000 mVp-p	±180mV
Sensor head 1 phase Z	Z	400 to 600 mVp-p	70 to 150 mV Measure the DC components of Z and RZ and use the differential as an offset.
Sensor head 1 RZ	RZ		

(Measure each signal by connecting the ground of the oscilloscope to T0.)

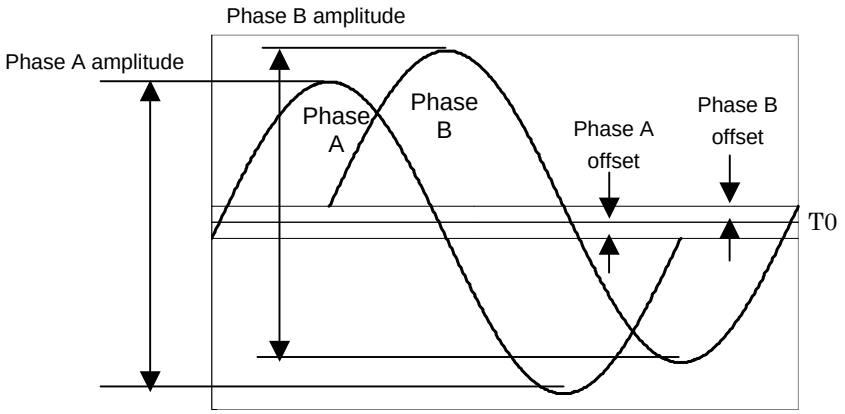

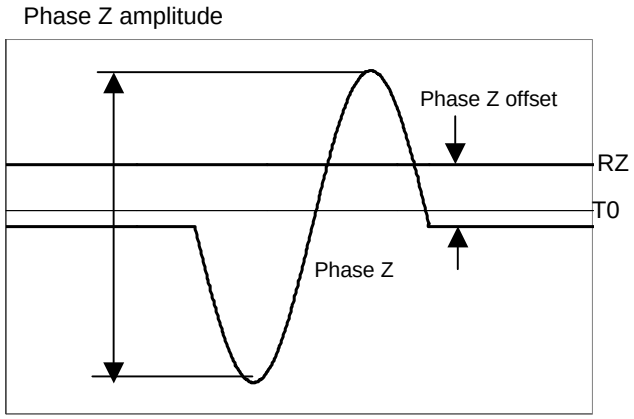

The check pins used with the αiCZ sensor fit in the following housing and crimp terminals:

Housing : HKP-13FS01 (Honda Tsushin Kogyo)

Crimp terminal: HKP-F113 (Honda Tsushin Kogyo), AWG#24 to 28 (ϕ1.0 to 1.5 mm)
HKP-F213 (Honda Tsushin Kogyo), AWG#28 to 32 (ϕ0.5 to 0.8 mm)

Crimping tool : KP309D (Honda Tsushin Kogyo)

11.2.3.13 Spindle alarms

Alarm number			LED indication	Alarm name	Alarm description
15*i*	**16*i***	**30*i***	**SP**		
SP0132	9132	SP9132	d2	Serial data error	Communication between the sensor and spindle amplifier is not performed.
SP0133	9133	SP9133	d3	Data transfer error	Serial data transmission/reception is not performed normally.
SP0134	9134	SP9134	d4	Soft phase alarm	An abnormal acceleration rate was detected.
SP0139	9139	SP9139	d9	Pulse error alarm	An error occurred in the interpolation circuit.
SP0140	9140	SP9140	E0	Count error alarm	The number of pulses between one phase Z and another is shifted by 4λ or more.
SP0141	9141	SP9141	E1	Sensor one-rotation signal undetected	No absolute position is established within 5 turns immediately after communication between the spindle amplifier and sensor is started.

APPENDIX

A FITTING A LIGHTNING SURGE PROTECTION DEVICE

This appendix describes how to install a lightning surge protector and provides notes on installation.

A.1 200-V INPUT SERIES POWER SUPPLY

When a line-to-line and line-to-ground lightning surge protector is used

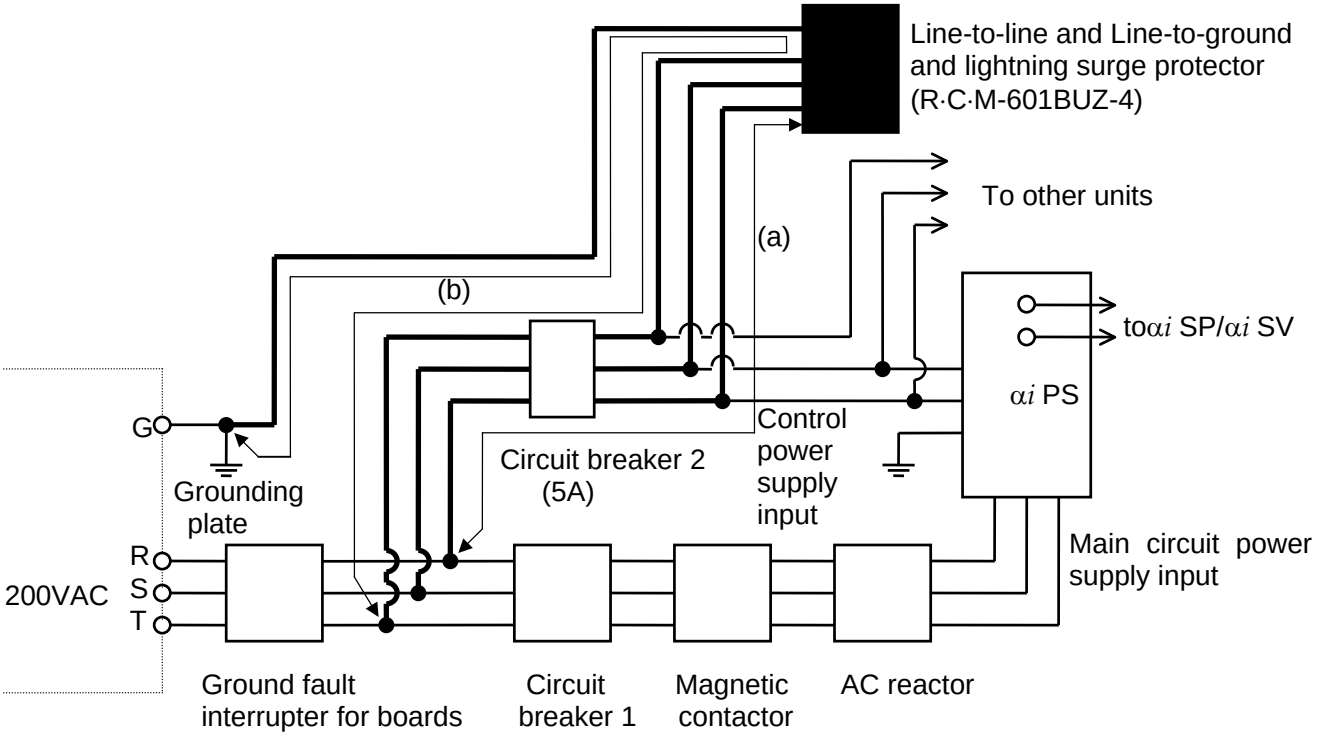

When line-to-line and line-to-ground lightning surge protectors are individually used

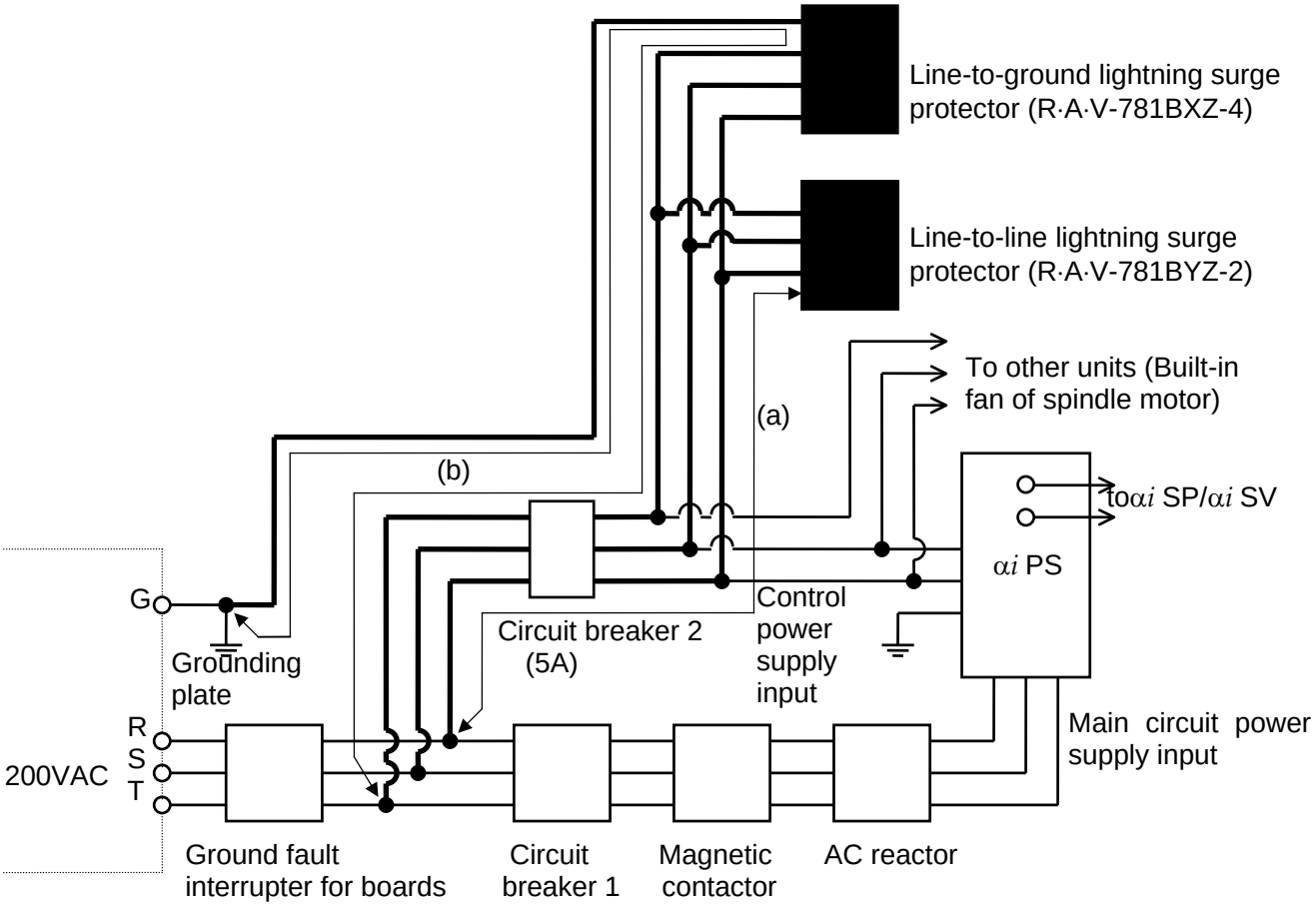

> ⚠ **CAUTION**
> If a voltage of 200 V is supplied from a 400-V power supply (with a neutral point used), a lightning surge protector should be used for 400 V; no lightning surge protector is needed for 200 V.

A.2 400-V INPUT SERIES POWER SUPPLY

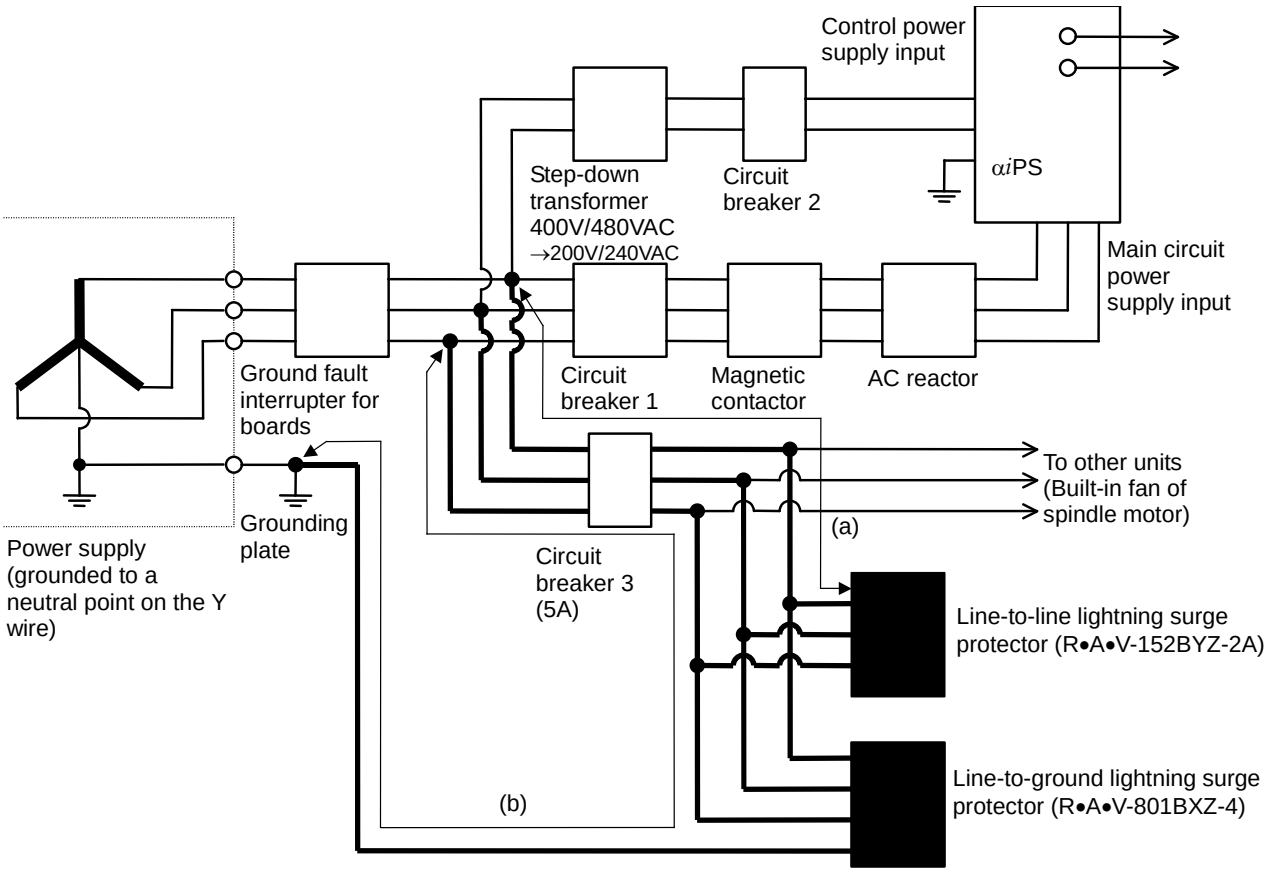

⚠ CAUTION

When the spindle motor αiI 1HV, αiI 1.5HV, αiI 2HV, or αiI 3HV is used, specification of the fan motor for $\alpha i I_T$ 1HV, $\alpha i I_T$ 2HV, and $\alpha i I_T$ 3HV is below :

1ϕ 200/230VAC

2 If a voltage of 200 V is supplied from a 400-V power supply (with a neutral point used), a lightning surge protector should be used for 400 V; no lightning surge protector is needed for 200 V.

A.3 CAUTIONS

(1) To increase the efficiency of lightning surge absorption, the wires indicated by bold lines should be as short as possible.
Wire cross-sectional area : 2 mm^2 or more
Wire length :
The total length of the cables used for line-to-line lightning surge protector (a) and that used for line-to-ground lightning surge protector (b) must not exceed 2 m.

(2) When performing a dielectric strength test by applying an overvoltage to the power line, line-to-ground lightning surge protector must be removed to enable the applied voltage to be maintained.

(3) The circuit breaker 2 (5A) or circuit breaker 3 (5A) works for line protection when the lightning surge absorber is short-circuited because of a surge higher than its rating being applied.

(4) Because current does not flow through lightning surge protector in a normal state, the circuit breaker 2 (5A) or circuit breaker 3 (5A) can be used together with the surge absorbers as well as with other equipment.

B CABLES

This appendix describes the cables used for the 20-pin interface connectors.
The cables are basically the same as those used for the FS16/18.
The table below lists the cables we have developed for interface connectors.
Contact the manufacturers as required.

Cable name	Purpose		Configuration	FANUC specification	Manufacturer	Manufacturer specification
10-pair cable	For general use		0.09mm^2 10 pairs	A66L-0001-0284#10P	Hitachi Electric Cable Co., Ltd.	UL20276-SB(0) 10P×28AWG(7/0.127)
					Oki Electric Cable Co., Ltd.	7/0.127 10P VX10-SV
Composite 7-core cable	For Pulsecoder	28m or less Flexible	0.3mm^2 5 cables 0.20mm^2 1 pairs	A66L-0001-0460	Hitachi Electric Cable Co., Ltd.	UL20276-SB(FLEX) 5×23AWG+1P×25AWG
		50m or less Flexible	0.5mm^2 5 cables 0.20mm^2 1 pairs	A66L-0001-0462	Hitachi Electric Cable Co., Ltd.	UL20276-SB(FLEX) 5×20AWG+1P×25AWG
		28m or less Fixed	0.3mm^2 5 cables 0.18mm^2 1 pairs	A66L-0001-0481	Hitachi Electric Cable Co., Ltd.	UL20276-SB(0) 5×23AWG+1P×25AWG
		50m or less Fixed	0.5mm^2 5 cables 0.18mm^2 1 pairs	A66L-0001-0491	Hitachi Electric Cable Co., Ltd.	UL20276-SB(0) 5×20AWG+1P×25AWG
Composite 10-core cable	For αiM sensor (for αiI 0.5) For αiMZ sensor (for αiI 0.5) For αiBZ sensor (small type)		0.3mm^2 2 cables 0.2mm^2 4 pairs	A66L-0001-0482	Hitachi Electric Cable Co., Ltd.	UL20276-SB(FLEX) 2×23AWG+4P×25AWG
Composite 12-core cable	For αi position coder For αi position coder S		0.5mm^2 6 cables 0.18mm^2 3 pairs	A66L-0001-0286	Hitachi Electric Cable Co., Ltd.	F-CO-VV(0)-SB 6×0.5SQ+3P×0.18SQ
					Oki Electric Cable Co., Ltd.	MIX12C(7/0.18, 20/0.18)HRS-SV
10-pair cable	For αi CZ sensor For αiBZ sensor (conventional type)		0.18mm^2 10 pairs	A66L-0001-0367	Shinko Electric Industries Co., Ltd.	FNC-019
Composite 16-core cable	For αi M sensor For αi MZ sensor For αi BZ sensor		0.5mm^2 6 cables 0.18mm^2 5 pairs	A66L-0001-0368	Shinko Electric Industries Co., Ltd.	FNC-021

B.1 10-PAIR CABLE

Specifications

Item		Unit	Specifications
Product No.		–	A66L-0001-0284#10P
Manufacturer		–	Hitachi Cable,Ltd. Oki Electric Cable, Co.,Ltd.
Rating		–	60°C, 30V:UL2789 80°C, 30V:UL80276
Material	Conductor	–	Stranded wire of tinned annealed copper (ASTM B-286)
	Insulator	–	Cross-linked vinyl
	Shield braid	–	Tinned annealed copper wire
	Sheath	–	Heat-resistant oilproof vinyl
Number of pairs		Pairs	10
Conductor	Size	AWG	28
	Structure	Conductors/ mm	7/0.127
	Outside diameter	mm	0.38
Insulator	Thickness	mm	0.1 (Thinnest portion : 0.08(3. 1mils))
	Outside diameter (approx.)	mm	0.58
	Core style (rating)	mm	UL15157(80°C, 30V)
Twisted pair	Outside diameter (approx.)	mm	1.16
	Pitch	mm	20 or less
Lay		–	Collect the required number of twisted pairs into a cable, then wrap binding tape around the cable. To make the cable round, apply a cable separator as required.
Lay diameter (approx.)		mm	3.5
Drain wire		Conductors/ mm	Hitachi Cable : Not available Oki Electric Cable : Available,10/0.12
Shield braid	Element wire diameter	mm	0.12
	Braid density	%	85 or more
Sheath	Color	–	Black
	Thickness	mm	1.0
	Outside diameter (approx.)	mm	6.2
Standard length		mm	200
Packing method		mm	Bundle
Electrical performance	Resistance of conductor (20°C)	Ω/km	233 or less
	Insulation resistance (20°C)	MΩ-km	10 or less
	Dielectric strength (AC)	V/min	300
Flame resistance		–	Shall pass flame resistance test VW-1SC of UL standards.

Cable structure

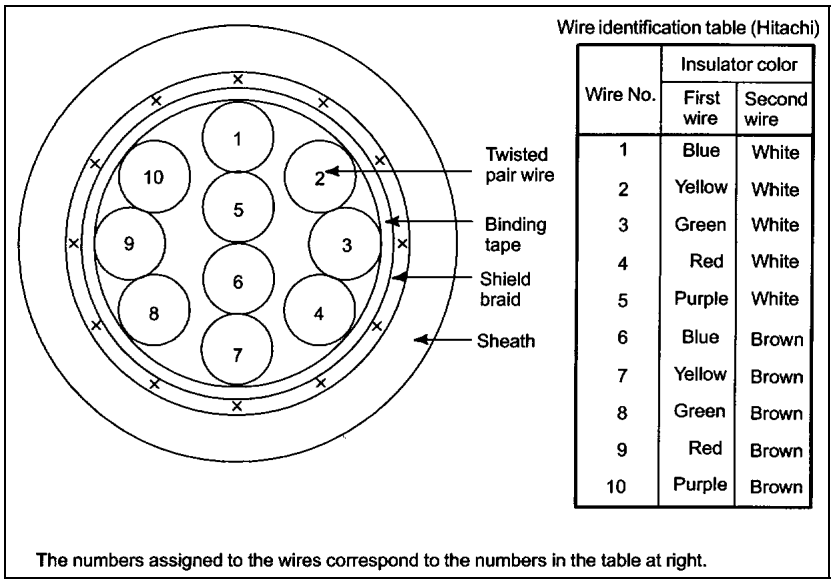

Wire identification table (Hitachi)

Wire No.	Insulator color	
	First wire	Second wire
1	Blue	White
2	Yellow	White
3	Green	White
4	Red	White
5	Purple	White
6	Blue	Brown
7	Yellow	Brown
8	Green	Brown
9	Red	Brown
10	Purple	Brown

The numbers assigned to the wires correspond to the numbers in the table at right.

Fig.B.1(a) Cable made by Hitachi Electric Cable

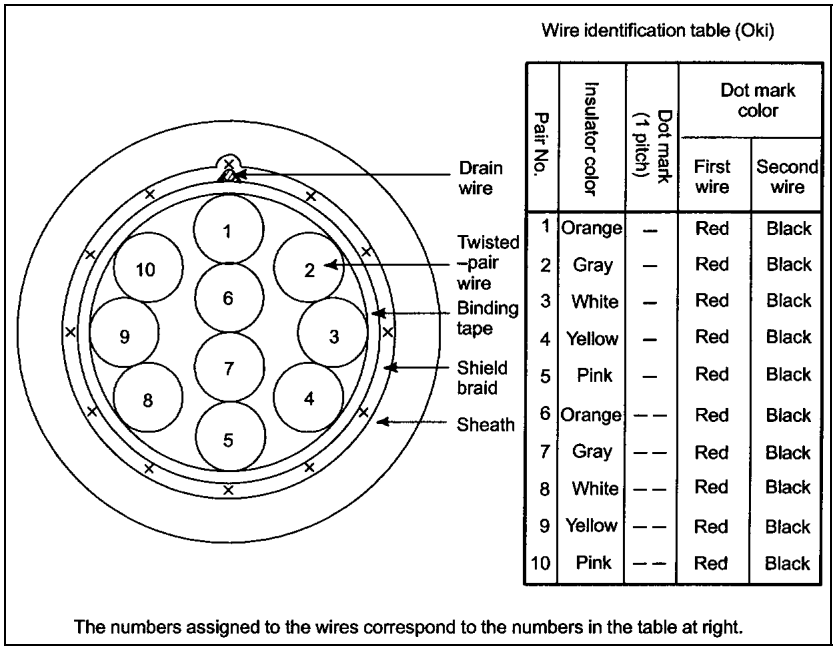

Wire identification table (Oki)

Pair No.	Insulator color	Dot mark (1 pitch)	Dot mark color	
			First wire	Second wire
1	Orange	—	Red	Black
2	Gray	—	Red	Black
3	White	—	Red	Black
4	Yellow	—	Red	Black
5	Pink	—	Red	Black
6	Orange	— —	Red	Black
7	Gray	— —	Red	Black
8	White	— —	Red	Black
9	Yellow	— —	Red	Black
10	Pink	— —	Red	Black

The numbers assigned to the wires correspond to the numbers in the table at right.

Fig.B.2(b) Cable made by Oki Electric Cable

B.2 COMPOSITE 7-CORE CABLE

A66L-0001-0460

- Specifications

Item		Unit	Specifications	
Product No.		–	A66L-0001-0460	
Manufacturer		–	Hitachi Electric Cable Co., Ltd.	
Rating		–	80°C, 30V	
Material	Conductor,braid-shielded wire,drain wire	–	Strand wire of tinned annealed copper (JIS C3152)	
	Insulator	–	Fluorine plastics (ETFE)	
	Sheath	–	Oilproof, heat-resistant vinyl	
Number of wires (wire nos.)		Cores	5 (1 to 5)	2 (one pair) (6 to 7)
Conductor	Size	mm^2	0.3	0.20
	Structure	Conductors /mm	60/0.08	40/0.08
	Conductors	mm	0.72	0.58
Insulator	Standard thickness	mm	0.15	0.15
	Outside diameter	mm	1.02	0.88
Twisted pair	Outside diameter	mm	–	1.76
	Pitch (approx.)	mm	–	13
Lay diameter (approx.)		mm	3.4	
Drain wire	Size	mm^2	0.15	
	Structure	Wires/mm	30/0.08	
	Outside diameter	mm	0.51	
Shield braid	Element wire diameter	mm	0.12	
	Thickness	mm	0.3	
	Braid density	%	85 or more	
	Outside diameter (approx.)	mm	4.2	
Sheath Sheath	Color	–	Black	
	Standard thickness	mm	1.0	
	Standard outside diameter (approx.)	mm	6.2	
	Outside diameter allowance	mm	5.7 to 7.3 (Note)	
Standard length		m	200	
Packing method		–	Bundle	
Electrical performance	Resistance of conductor (at 20°C) (wire nos.)	Ω/km	69.5 or less (1 to 5)	109 or less (6 to 7)
	Insulation resistance (20°C)	MΩ-km	100 or more	
	Dielectric strength (AC)	–	500VAC for 5 minutes	
Flame resistance		–	Shall pass flame resistance test VW-1 of UL standards.	

NOTE
The maximum outside diameter applies to portions other than the drain wire.

- Cable structure

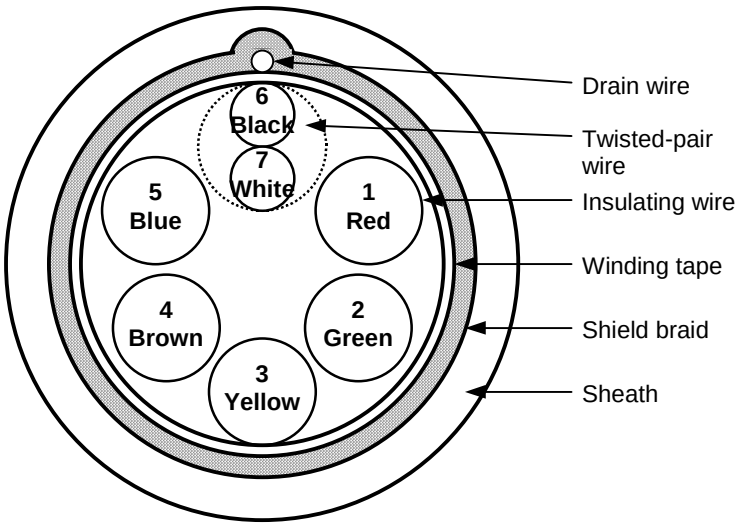

The colors in the figure indicate the colors of insulators.

A66L-0001-0462

- Specifications

Item		Unit	Specifications	
Product No.		–	A66L-0001-0462	
Manufacturer		–	Hitachi Electric Cable Co., Ltd.	
Rating		–	80°C, 30V	
Material	Conductor,braid-shielded wire,drain wire	–	Strand wire of tinned annealed copper (JIS C3152)	
	Insulator	–	Fluorine plastics (ETFE)	
	Sheath	–	Oilproof, heat-resistant vinyl	
Number of wires (wire nos.)		Cores	5 (1 to 5)	2 (one pair) (6 to 7)
Conductor	Size	mm^2	0.5	0.20
	Structure	Conductors /mm	104/0.08	40/0.08
	Conductors	mm	0.94	0.58
Insulator	Standard thickness	mm	0.2	0.15
	Outside diameter	mm	1.34	0.88
Twisted pair	Outside diameter	mm	–	1.76
	Pitch (approx.)	mm	–	13
Lay diameter (approx.)		mm	4.2	
Drain wire	Size	mm^2	0.15	
	Structure	Wires/mm	30/0.08	
	Outside diameter	mm	0.51	
Shield braid	Element wire diameter	mm	0.12	
	Thickness	mm	0.3	
	Braid density	%	85 or more	
	Outside diameter (approx.)	mm	5.0	
Sheath	Color	–	Black	
	Standard thickness	mm	1.0	
	Standard outside diameter (approx.)	mm	7.0	
	Outside diameter allowance	mm	6.5 to 8.0 (Note)	
Standard length		m	200	
Packing method		–	Bundle	
Electrical performance	Resistance of conductor (at 20°C) (wire nos.)	Ω/km	40.1 or less (1 to 5)	109 or less (6 to 7)
	Insulation resistance (20°C)	MΩ-km	100 or more	
	Dielectric strength (AC)	–	500VAC for 5 minutes	
Flame resistance		–	Shall pass flame resistance test VW-1 of UL standards.	

NOTE
The maximum outside diameter applies to portions other than the drain wire.

- Cable structure

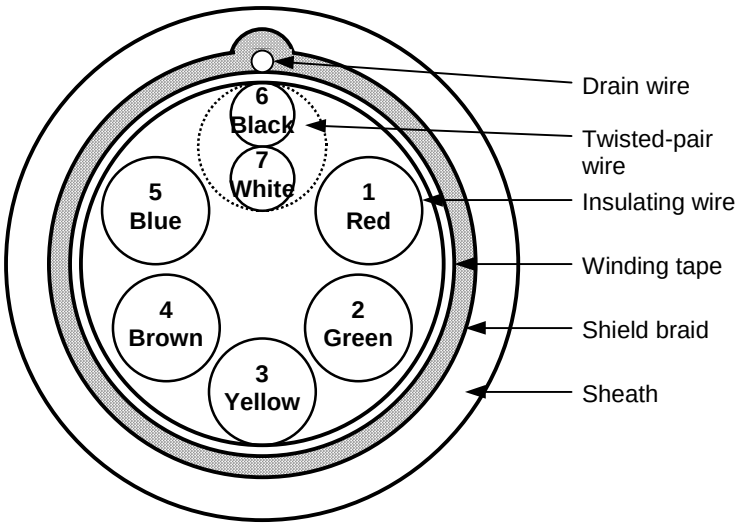

The colors in the figure indicate the colors of insulators.

A66L-0001-0481

- Specifications

Item		Unit	Specifications	
Product No.		–	A66L-0001-0481	
Manufacturer		–	Hitachi Electric Cable Co., Ltd.	
Rating		–	80°C, 30V	
Material	Conductor,braid-shielded wire,drain wire	–	Strand wire of tinned annealed copper (JIS C3152)	
	Insulator	–	Heat-resistant vinyl	
	Sheath	–	Oilproof, heat-resistant vinyl	
Number of wires (wire nos.)		Cores	5 (1 to 5)	2 (one pair) (6 to 7)
Conductor	Size	mm^2	0.3	0.18
	Structure	Conductors /mm	12/0.18	7/0.18
	Conductors	mm	0.72	0.54
Insulator	Standard thickness	mm	0.25	0.25
	Outside diameter	mm	1.22	0.94
Twisted pair	Outside diameter	mm	–	1.88
	Pitch (approx.)	mm	–	20
Lay diameter (approx.)		mm	3.9	
Drain wire	Size	mm^2	0.18	
	Structure	Wires/mm	7/0.18	
	Outside diameter	mm	0.54	
Shield braid	Element wire diameter	mm	0.12	
	Thickness	mm	0.3	
	Braid density	%	85 or more	
	Outside diameter (approx.)	mm	4.6	
Sheath	Color	–	Black	
	Standard thickness	mm	0.8	
	Standard outside diameter (approx.)	mm	6.2	
	Outside diameter allowance	mm	5.7 to 7.3 (Note)	
Standard length		m	200	
Packing method		–	Bundle	
Electrical performance	Resistance of conductor (at 20°C) (wire nos.)	Ω/km	65.7 or less (1 to 5)	113 or less (6 to 7)
	Insulation resistance (20°C)	MΩ-km	15 or more	
	Dielectric strength (AC)	–	500VAC for 5 minutes	
Flame resistance		–	Shall pass flame resistance test VW-1 of UL standards.	

NOTE
The maximum outside diameter applies to portions other than the drain wire.

- Cable structure

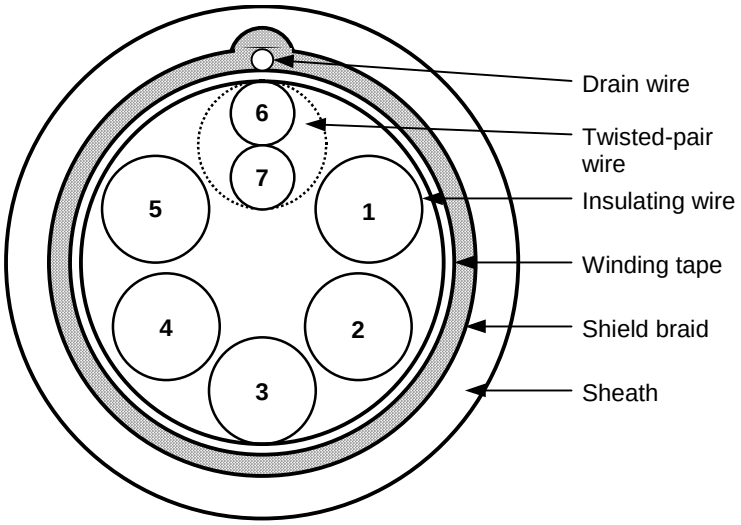

The numbers assigned to the wires correspond to the numbers in the table below.

Wire No.	Insulator color	Dot mark color
1	Yellow	--
2	Yellow	Black
3	Yellow	Red
4	Bright green	Black
5	Bright green	Red
6	Light brown	Black
7	Light brown	Red

A66L-0001-0491

- Specifications

Item		Unit	Specifications	
Product No.		–	A66L-0001-0491	
Manufacturer		–	Hitachi Electric Cable Co., Ltd.	
Rating		–	80°C, 30V	
Material	Conductor,braid-shielded wire,drain wire	–	Strand wire of tinned annealed copper (JIS C3152)	
	Insulator	–	Heat-resistant vinyl	
	Sheath	–	Oilproof, heat-resistant vinyl	
Number of wires (wire nos.)		Cores	5 (1 to 5)	2 (one pair) (6 to 7)
Conductor	Size	mm^2	0.5	0.18
	Structure	Conductors /mm	20/0.18	7/0.18
	Conductors	mm	0.93	0.54
Insulator	Standard thickness	mm	0.25	0.25
	Outside diameter	mm	1.43	0.94
Twisted pair	Outside diameter	mm	–	1.88
	Pitch (approx.)	mm	–	23
Lay diameter (approx.)		mm	4.4	
Drain wire	Size	mm^2	0.18	
	Structure	Wires/mm	7/0.18	
	Outside diameter	mm	0.54	
Shield braid	Element wire diameter	mm	0.12	
	Thickness	mm	0.3	
	Braid density	%	85 or more	
	Outside diameter (approx.)	mm	5.1	
Sheath	Color	–	Black	
	Standard thickness	mm	0.55	
	Standard outside diameter (approx.)	mm	6.2	
	Outside diameter allowance	mm	5.7 to 7.3 (Note)	
Standard length		m	200	
Packing method		–	Bundle	
Electrical performance	Resistance of conductor (at 20°C) (wire nos.)	Ω/km	39.4 or less (1 to 5)	113 or less (6 to 7)
	Insulation resistance (20°C)	MΩ-km	15 or more	
	Dielectric strength (AC)	–	500VAC for 5 minutes	
Flame resistance		–	Shall pass flame resistance test VW-1 of UL standards.	

NOTE
The maximum outside diameter applies to portions other than the drain wire.

- Cable structure

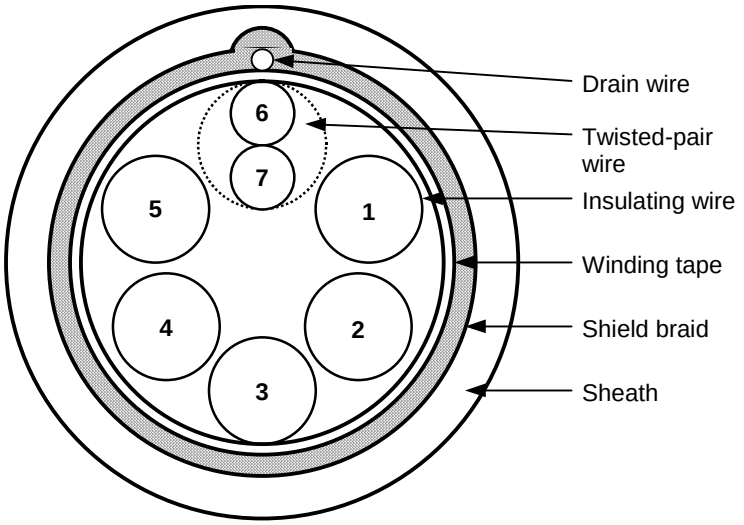

The numbers assigned to the wires correspond to the numbers in the table below.

Wire No.	Insulator color	Dot mark color
1	Light brown	--
2	Yellow	--
3	Yellow	Black
4	Yellow	Red
5	Bright green	--
6	Light brown	Black
7	Light brown	Red

B.3 COMPOSITE 10-CORE CABLE

Specifications

Item		Unit	Specifications	
Product No.		–	A66L-0001-0482	
Manufacturer		–	Hitachi Electric Cable Co., Ltd.	
Rating		–	80°C, 30V	
Material	Conductor, braid-shielded wire, drain wire	–	Strand wire of tinned annealed copper (JIS C3152)	
	Insulator	–	Heat-resistant vinyl	
	Sheath	–	Oilproof, heat-resistant vinyl	
Number of wires (wire nos.)		Cores	2	8 (four pairs)
Conductor	Size	mm^2	0.3	0.2
	Structure	Conductors /mm	60/0.08	40/0.08
	Conductors	mm	0.72	0.58
Insulator	Standard thickness	mm	0.25	0.2
	Outside diameter	mm	1.22	0.98
Twisted pair	Outside diameter	mm	–	1.96
	Pitch (approx.)	mm	–	
Lay diameter		mm	5.0	
Drain wire	Size	mm^2	0.15	
	Structure	Wires/mm	30/0.08	
	Outside diameter	mm	0.51	
Shield braid	Element wire diameter	mm	0.12	
	Thickness	mm	0.3	
	Braid density	%	85 or more	
	Outside diameter (approx.)	mm	5.7	
Sheath	Color	–	Black	
	Standard thickness	mm	0.65	
	Standard outside diameter (approx.)	mm	7.0	
	Outside diameter allowance	mm	6.5 to 8.0 (Note)	
Standard length		m	200	
Packing method		–	Bundle	
Electrical performance	Resistance of conductor (at 20°C) (wire nos.)	Ω/km	69.5 or less	109 or less
	Insulation resistance (20°C)	MΩ-km	15 or more	
	Dielectric strength (AC)	–	500VAC for 5 minutes	
Flame resistance		–	Shall pass flame resistance test VW-1 of UL standards.	

NOTE
The maximum outside diameter applies to portions other than the drain wire.

Cable structure

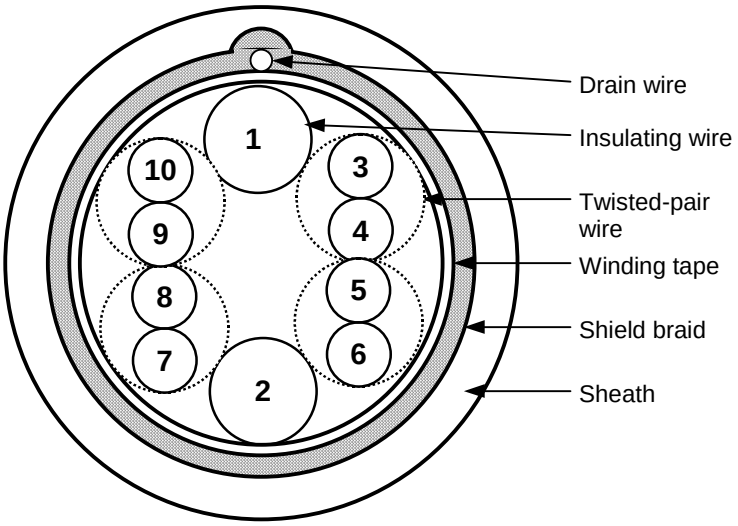

The numbers assigned to the wires correspond to the numbers in the table below.

Wire No.	Insulator color	Dot mark color
1	Light brown	--
2	Yellow	--
3	Light brown	Black
4	Light brown	Red
5	Yellow	Black
6	Yellow	Red
7	Bright green	Black
8	Bright green	Red
9	Gray	Black
10	Gray	Red

B.4 COMPOSITE 12-CORE CABLE

Specifications

Item		Unit	Specifications	
Product No.		–	A66L-0001-0286	
Manufacturer		–	Hitachi Electric Cable Co., Ltd. Oki Cable, Ltd.	
Rating		–	80°C, 30V	
Material	Conductor, braid-shielded wire, drain wire	–	Strand wire of tinned annealed copper (JIS C3152)	
	Insulator	–	Heat-resistant flame-retardant vinyl	
	Sheath	–	Oilproof, heat-resistant, flame-retardant vinyl	
Number of wires (wire nos.)		Cores	6 (1 to 6)	6 (three pairs) (7 to 9)
Conductor	Size	mm^2	0.5	0.18
	Structure	Conductors /mm	20/0.18	7/0.18
	Conductors	mm	0.94	0.54
Insulator	Standard thickness (The minimum thickness is at least 80% of the standard thickness.)	mm	0.25	0.2
	Outside diameter	mm	1.50	0.94
Twisted pair	Outside diameter	mm		1.88
	Direction of lay	–		Left
	Pitch	mm		20 or less
Lay		–	Twist the wires at an appropriate pitch so the outermost layer is right-twisted, and wrap tape around the outermost layer. Apply a cable separator as required.	
Lay diameter		mm	5.7	
Drain wire	Size	mm^2	0.3	
	Structure	Wires/mm	12/0.18	
	Outside diameter	mm	0.72	
Shield braid	Element wire diameter	mm	0.12	
	Thickness	mm	0.3	
	Braid density	%	70	
	Outside diameter	mm	6.3	
Sheath	Color	–	Black	
	Standard thickness (The minimum thickness is at least 85% of the standard thickness.)	mm	1.1	
	Outside diameter	mm	8.5Max.9.0(1)	
Standard length		m	100	
Packing method		–	Bundle	
Electrical performance	Resistance of conductor (at 20°C) (wire nos.)	Ω/km	39.4 (1 to 6)	113 (7 to 9)
	Insulation resistance (20°C)	MΩ-km	15	
	Dielectric strength (AC)	V/min	500	
Flame resistance		–	Shall pass flame resistance test VW-1SC of UL standards.	

NOTE
The maximum outside diameter applies to portions other than the drain wire.

Markings on cable

(i) Name or symbol of the manufacturer
(ii) Manufacturing year

Cable structure

The cable structure is shown below.

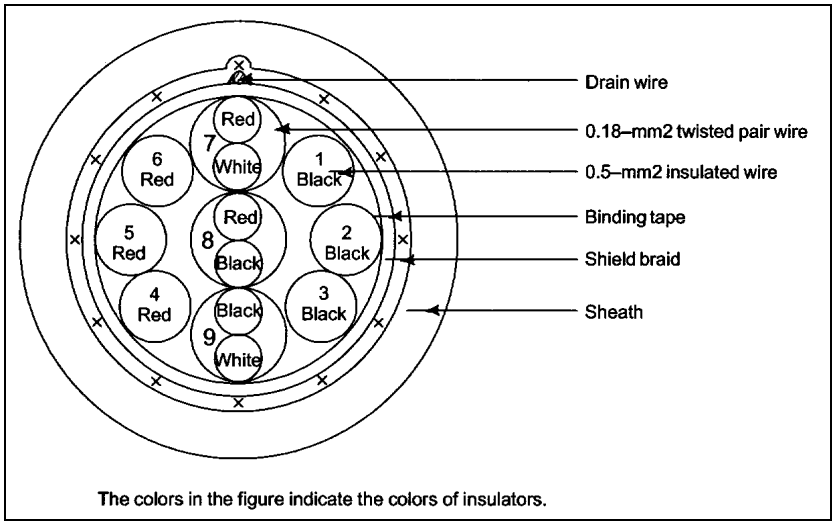

B.5 COMPOSITE 16-CORE CABLE

Specifications

Item			Unit	Specifications	
Product No.				A66L-0001-0368(FNC-021)	
Manufacturer				Shinko Electric Industries Co., Ltd.	
Rating				80°C, 60V	
Material	Conductor			Stranded wire of tinned annealed copper (JIS C 3152)	
	Insulator			Heat-resistant polivinyl chioride	
	Shield braid			Tinned annealed copper wire	
	Sheath			Heat-resistant, oil-resistance, flame-retardent polivinyl chioride (S-3)	
Number of pairs			Pairs	6	10 (5-pair)
Conductor	Nominal cross-sectional area		mm^2	0.5	0.18
	Structure		Conductors /mm	20/0.18	7/0.18
	Outside diameter (approx.)		mm	0.9	0.54
Insulator	Thickness		mm	0.25 (Average thickness : 90% or more)	0.2 (Average thickness : 90% or more)
	Outside diameter (approx.)		mm	1.5	0.94
Twisted pair	Outside diameter (approx.)		mm	–	1.88 (pitch : 20 mm or less)
Lay	Diameter (approx.)		mm	6.5	
Tape-wound wire	Diameter (approx.)		mm	6.6	
Drain wire	Structure		Conductors /mm	12/0.18	
Shield	Element wire diameter		mm	0.12 (Braid density : 70% or more)	
Sheath	Color			Black	
	Thickness		mm	1.0 (Average thickness : 90% or more)	
	Outside diameter		mm	9.2 ± 0.3	
Electrical performance	Electric resistance	$0.18mm^2$	Ω/km	113 or less (20°C JIS C 3005 6)	
		$0.5mm^2$		39.4 or less (20°C JIS C 3005 6)	
	Dielectricstrength		V/min	AC500(JIS C 3005 8 (2))	
	Insulation resistance		MΩ-km	15 or more (20°C JIS C 3005 9.1)	

Cable structure

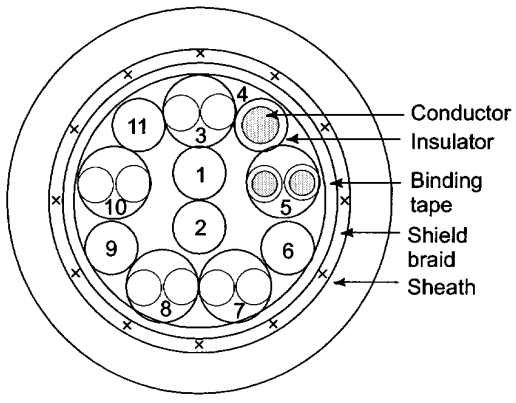

Pair No.	Dot mark color	Size mm^2
1	Red	0.5
2	Red	0.5
3	White/Yellow	0.18
4	Black	0.5
5	White/Green	0.18
6	Black	0.5
7	White/Gray	0.18
8	Black/Orange	0.18
9	Black	0.5
10	Black/Brown	0.18
11	Red	0.5

B.6 10-PAIR CABLE

Specifications

Item		Unit	Specifications
Product No.			A66L-0001-0367(FNC-019)
Manufacturer			Shinko Electric Industries Co., Ltd.
Rating			80°C, 60V
Material	Conductor		Stranded wire of tinned annealed copper (JIS C 3152)
	Insulator		Heat-resistant polivinyl chioride
	Shield braid		Tinned annealed copper wire
	Sheath		Heat-resistant, oil-resistance, flame-retardent polivinyl chioride (S-3)
Number of pairs		Pairs	20 (10-pair)
Conductor	Nominal cross-sectional area	mm^2	0.18
	Structure	Conductors /mm	7/0.18
	Outside diameter (approx.)	mm	0.54
Insulator	Thickness	mm	0.25 (Average thickness : 90% or more)
	Outside diameter (approx.)	mm	1.04
Twisted pair	Outside diameter (approx.)	mm	2.08 (pitch : 25 mm or less)
Lay	Diameter (approx.)	mm	6.5
Tape-wound wire	Diameter (approx.)	mm	6.6
Shield	Element wire diameter	mm	0.12 (Braid density : 70% or more)
Sheath	Color		Black
	Thickness	mm	1.0 (Average thickness : 90% or more)
	Outside diameter	mm	9.2 ± 0.3
Electrical performance	Electric resistance	Ω/km	110 or less (20°C JIS C 3005 6)
	Dielectricstrength	V/min	AC500(JIS C 3005 8 (2))
	Insulation resistance	MΩ-km	15 or more (20°C JIS C 3005 9.1)

Cable structure

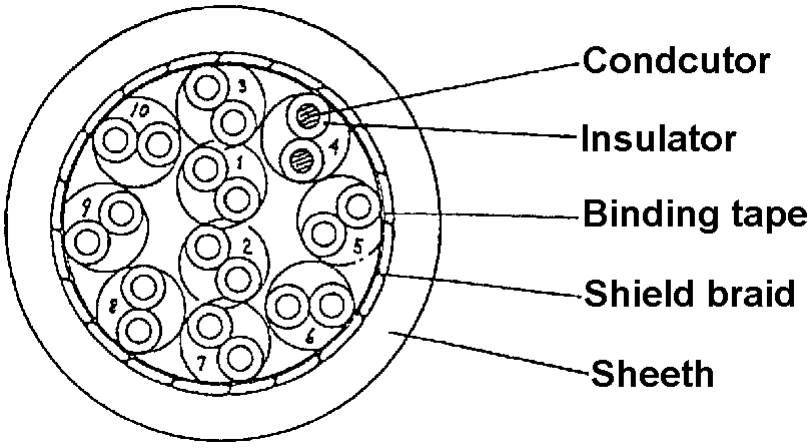

Pair number	Dot mark color
1	Black/Orange
2	Black/Gray
3	White/Yellow
4	White/Green
5	White/Brown
6	White/Orange
7	White/Gray
8	Black/Yellow
9	Black/Green
10	Black/Brown

C EXTERNAL DIMENSIONS OF EACH CONNECTOR

Manufacture: Tyco Electronics AMP
Type : 1-178128-3

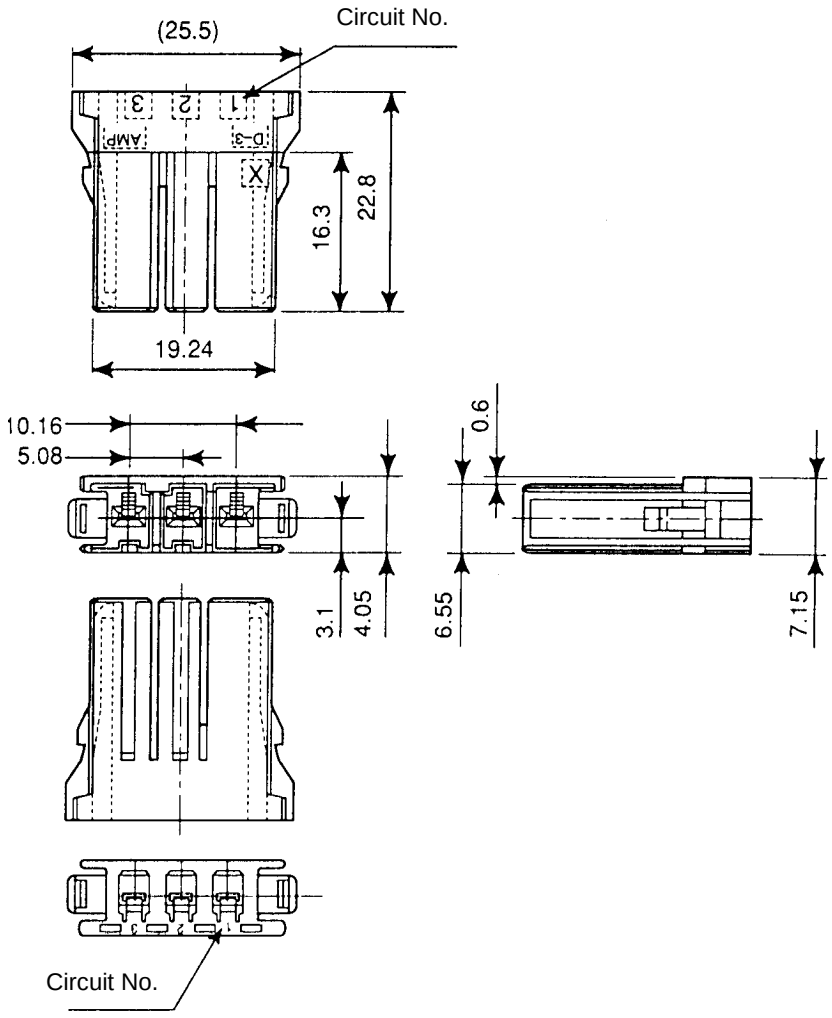

Fig.C(a) Tyco Electronics AMP connector (1)

Manufacture: Tyco Electronics AMP
Type : 2-178128-3

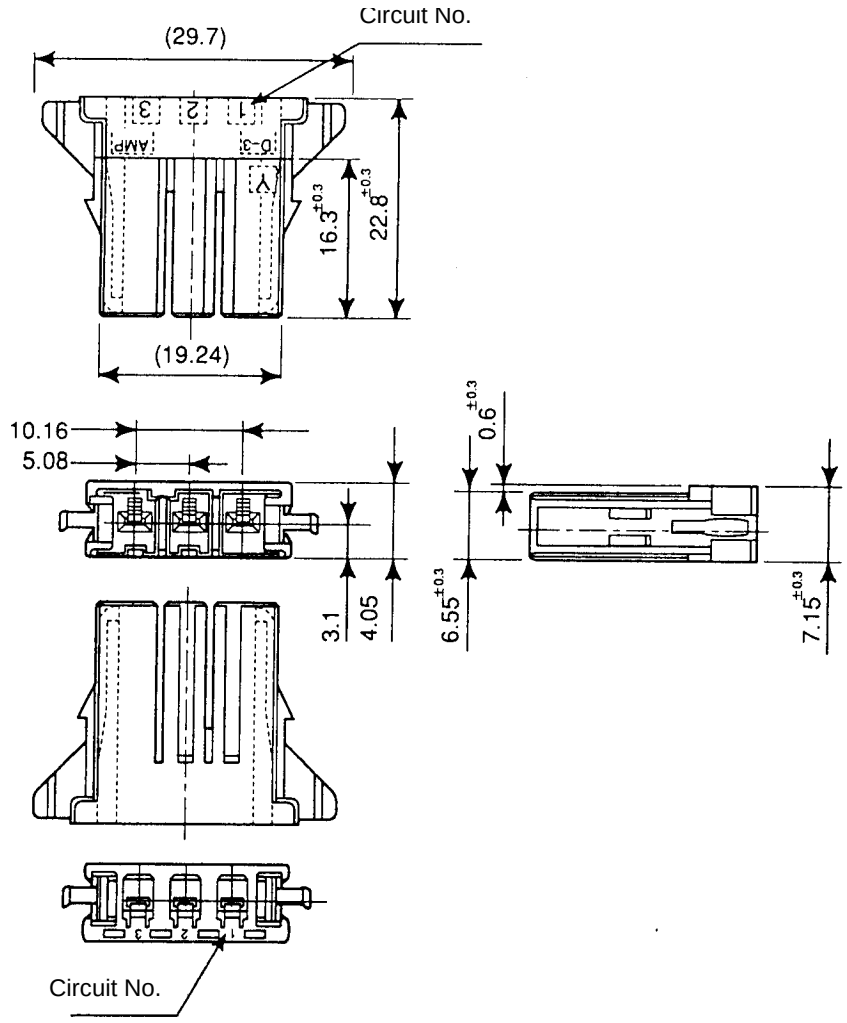

Fig.C(b) Tyco Electronics AMP connector (2)

Manufacture: Tyco Electronics AMP
Type : 1-175218-2
Cable : AWG16, 18, 20

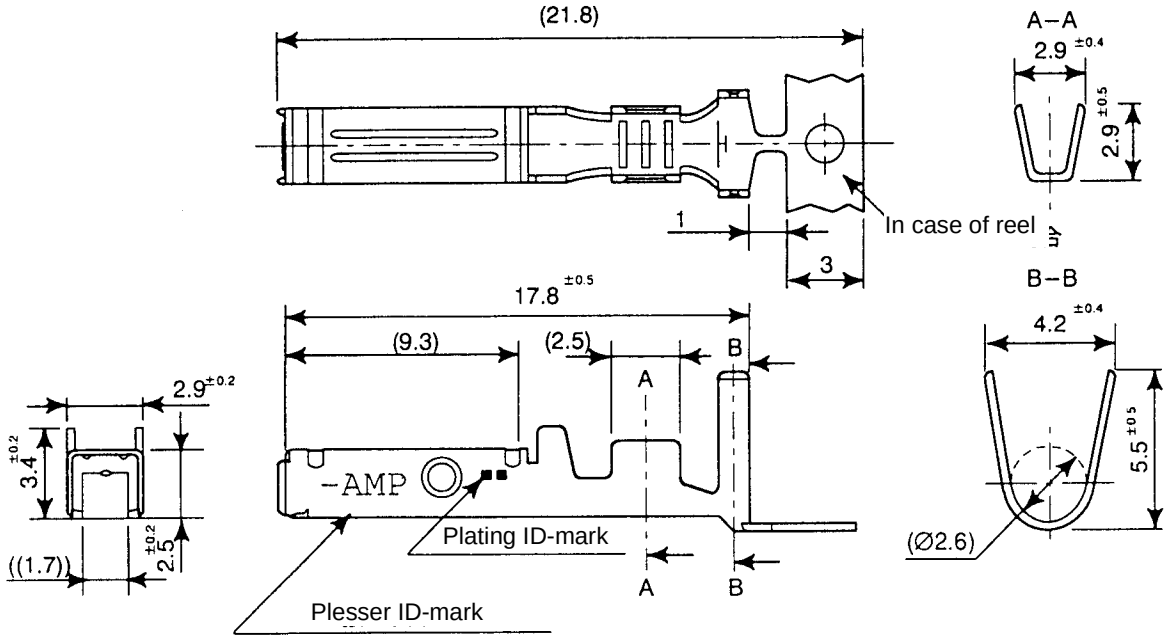

Fig.C(c) Contact for Tyco Electronics AMP connector

Manufacture: Tyco Electronics AMP
Type : 1-1318119-4

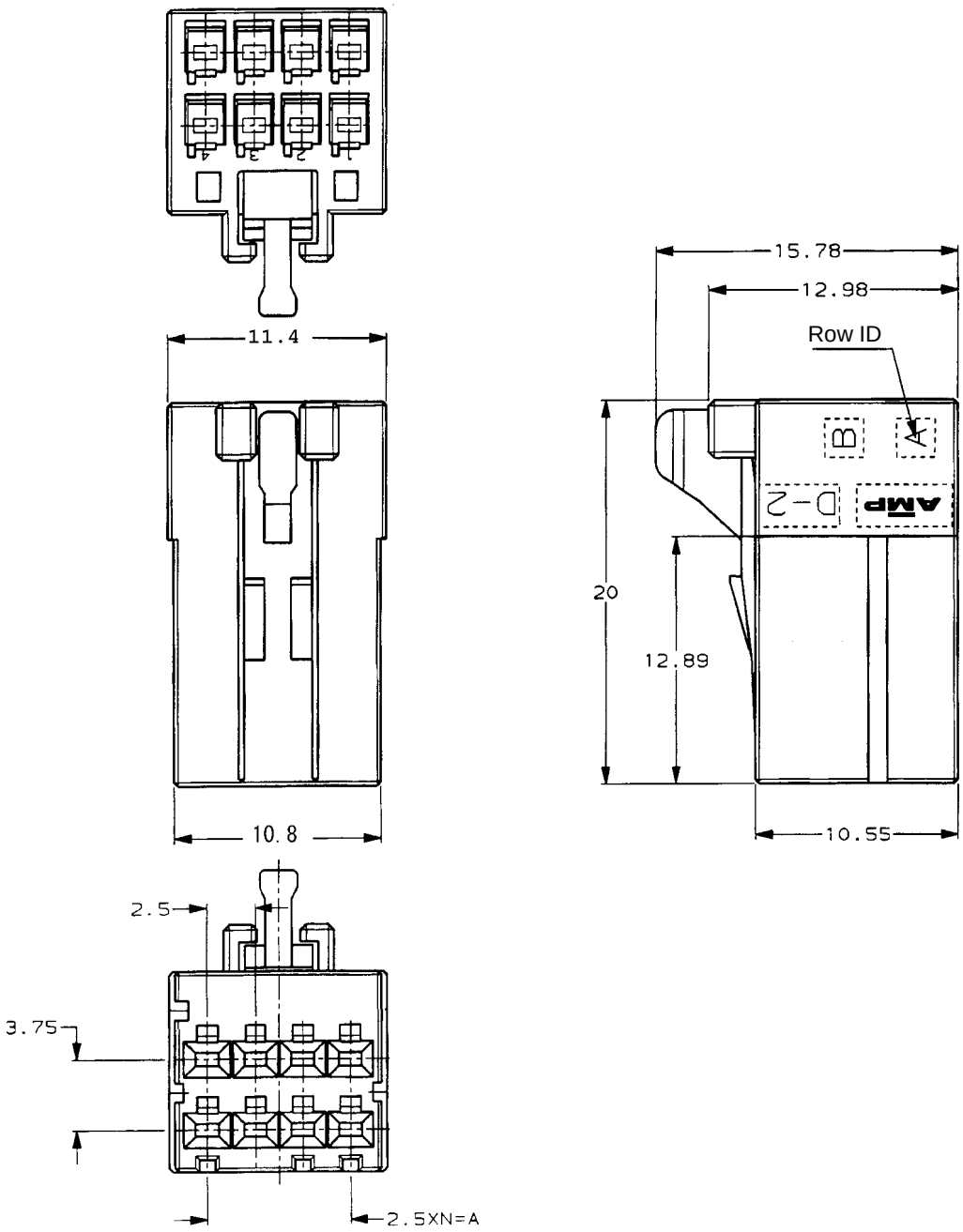

Fig.C(d) Contact for Tyco Electronics AMP connector

Manufacture: HIROSE ELECTRIC CO., LTD.
Type : FI30-20S (crimp type)
Housing : FI-20-CVS2 (plastic)

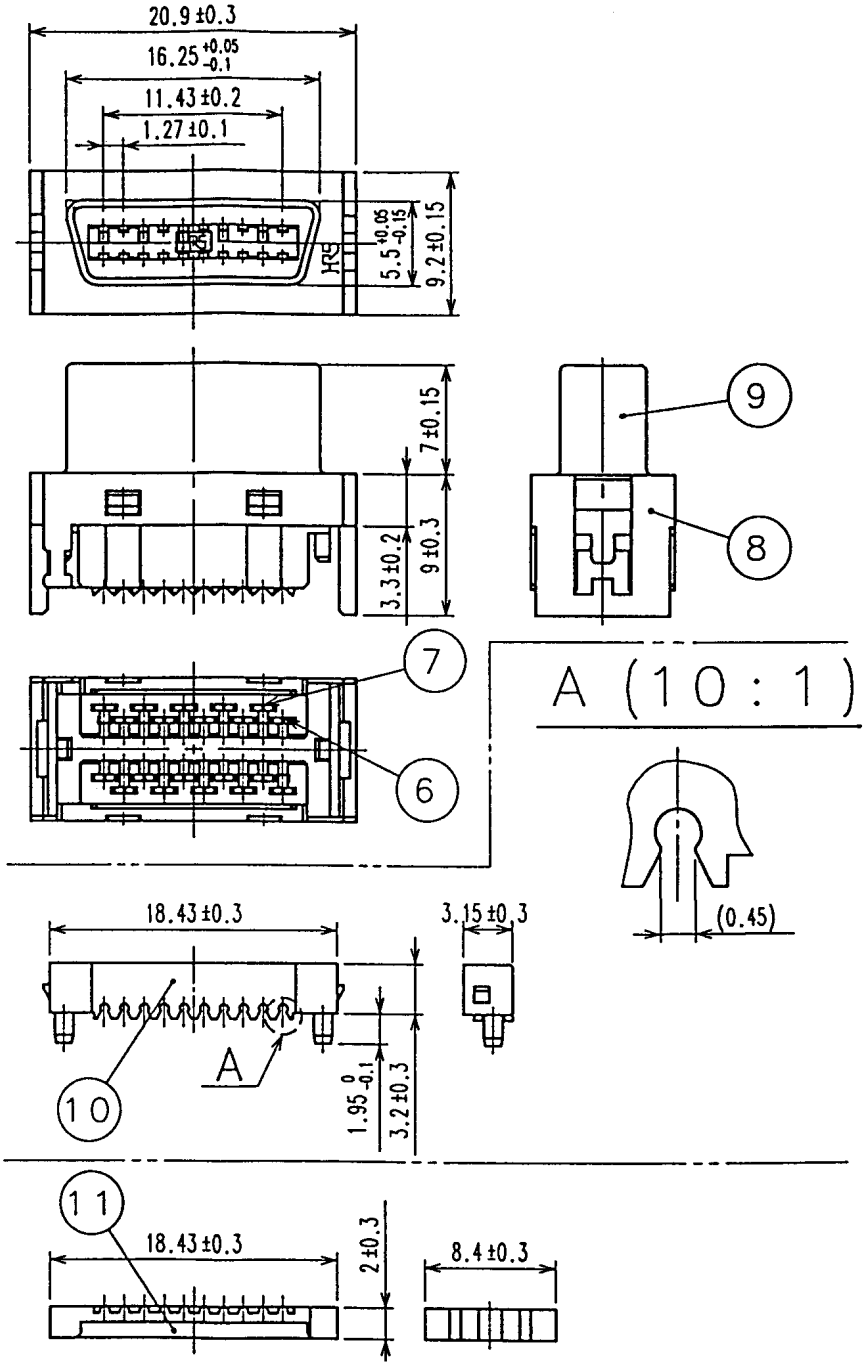

Fig.C(e) Connector for interface (Crimp type)

Manufacture: HIROSE ELECTRIC CO., LTD.
Type : FI40-20S (solder type)
Housing : FI-20-CVS5 (plastic)

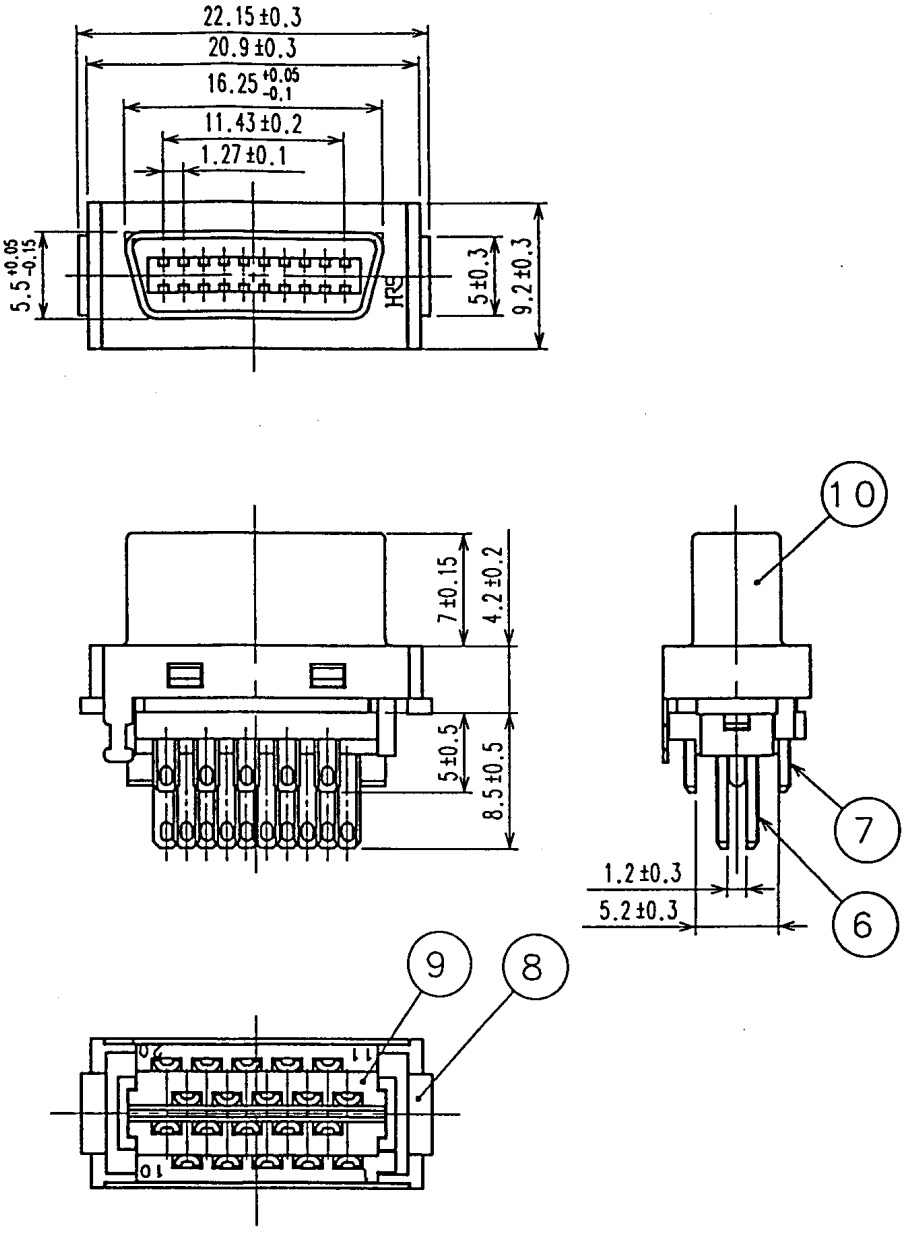

Fig.C(f) Connector for interface (Solder type)

Manufacture: HIROSE ELECTRIC CO., LTD.
Type : FI40B-2015S (solder type)
Housing : FI-2015-CVS (plastic)

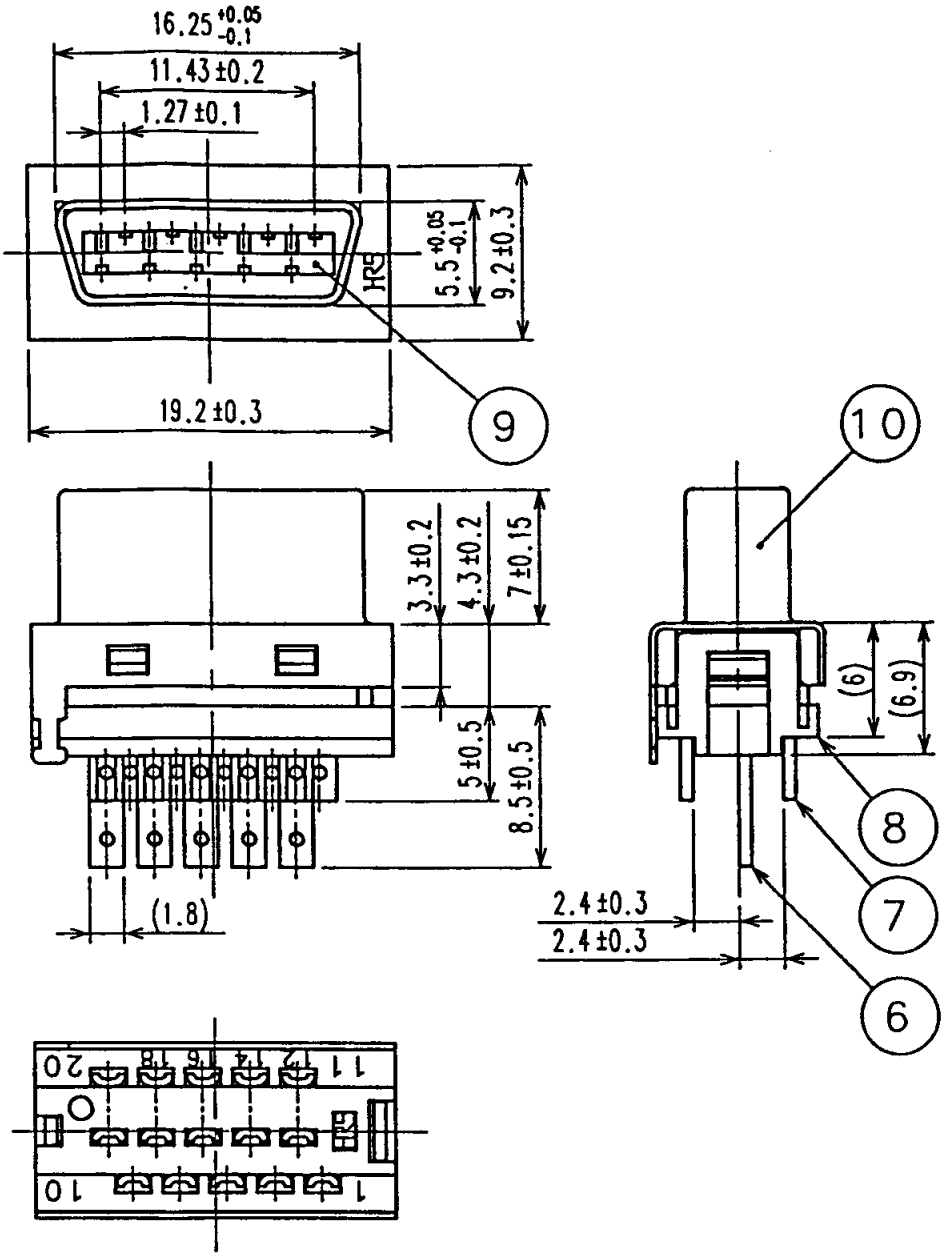

Fig.C(g) Connector for interface (Solder type)

NOTE
This connector does not contact locations 11, 13, 15, 17, and 19.

Manufacture: HIROSE ELECTRIC CO., LTD.
Type : FI-20-CVS2
Connector : FI30-20S

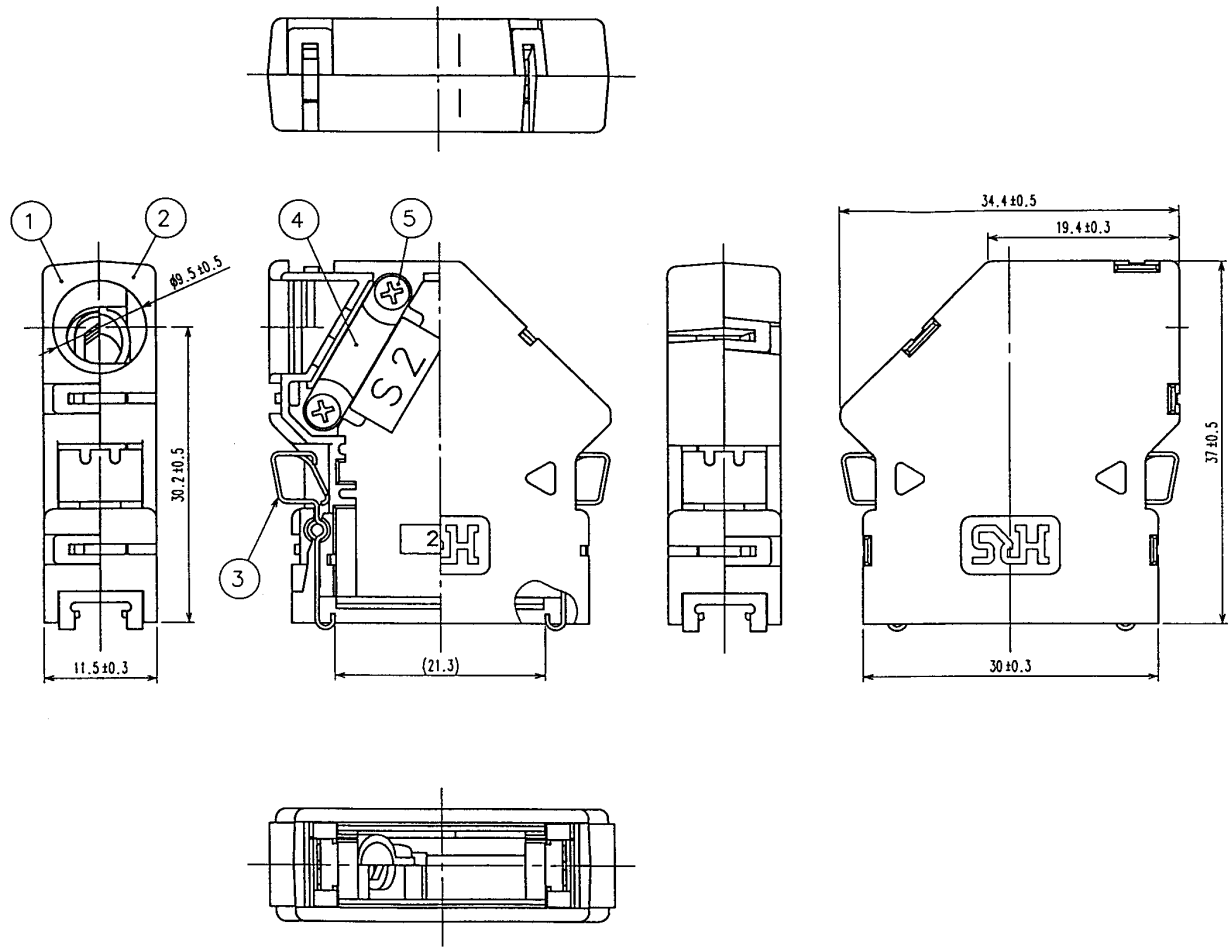

Fig.C(h) Connector housing (Side cable type)

Manufacture: HIROSE ELECTRIC CO., LTD.
Type : FI-20-CVS5
Connector : FI40B-20S

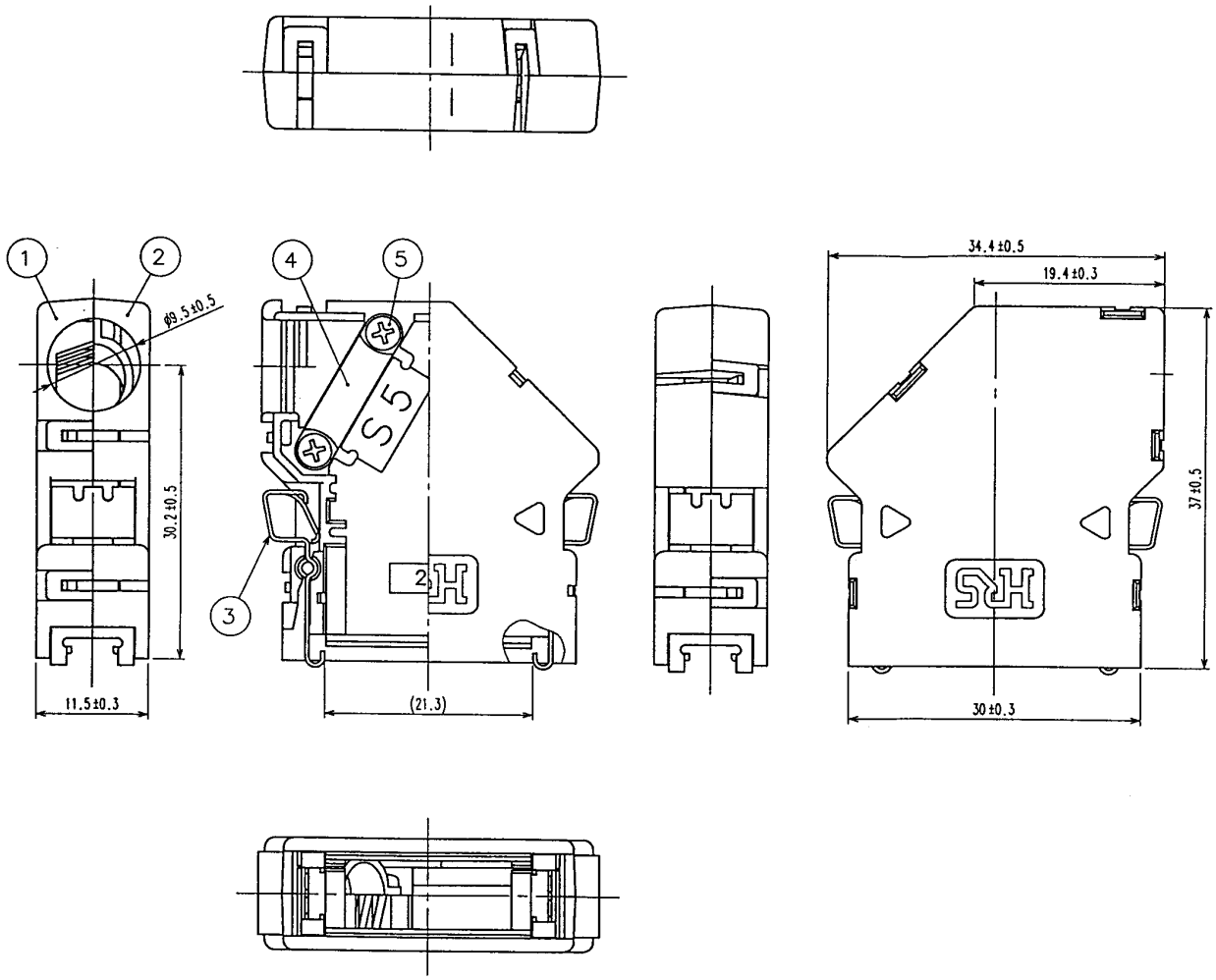

Fig.C(i) Connector housing (Side cable type)

Manufacture: HIROSE ELECTRIC CO., LTD.
Type : FI-2015-CVS
Connector : FI40B-2015S

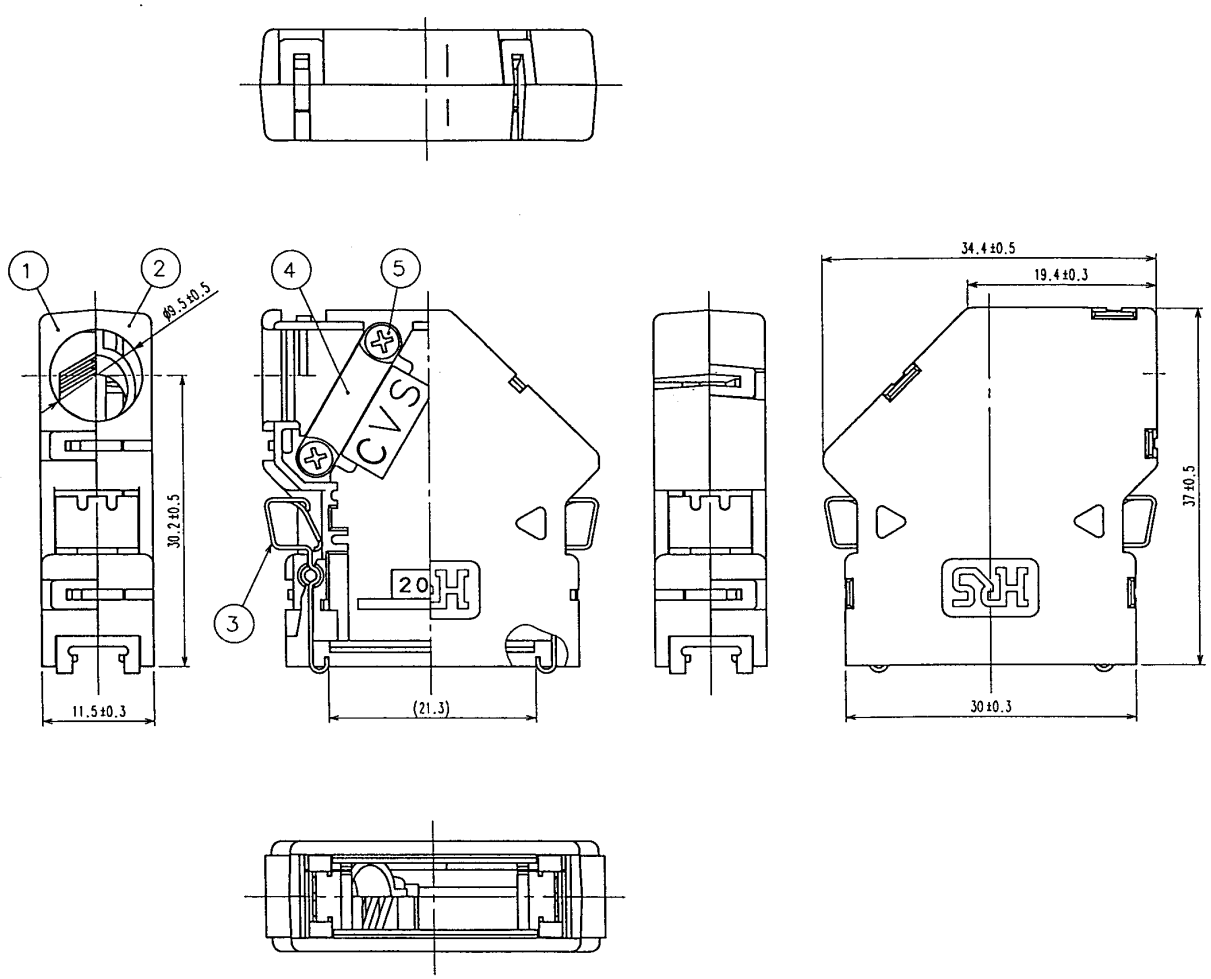

Fig.C(j) Connector housing (Side cable type)

D FEEDBACK CABLE LENGTH

Appendix D, "FEEDBACK CABLE LENGTH", consists of the following sections:

D.1 SPINDLE CABLE LENGTH (WHEN RECOMMENDED CABLES ARE USED).....432
D.2 SERVO CABLE LENGTH (WHEN RECOMMENDED CABLES ARE USED).....433

D.1 SPINDLE CABLE LENGTH (WHEN RECOMMENDED CABLES ARE USED)

Detector	Recommended cable	Cable structure	Maximum cable length
αiM sensor	A66L-0001-0368	0.5mm^2, 6 conductors (for power supply) 0.18mm^2, 5 pairs (for signals)	72m When one power line is used
αiMZ sensor, αiBZ sensor	A66L-0001-0368	0.5mm^2, 6 conductors (for power supply) 0.18mm^2, 5 pairs (for signals)	50m When one power line is used
αiM sensor (for α0.5i)	A66L-0001-0482	0.3mm^2, 2 conductors (for power supply) 0.2mm^2, 3 pairs (for signals)	41m
αiMZ sensor (for α0.5i)	A66L-0001-0482	0.3mm^2, 2 conductors (for power supply) 0.2mm^2, 4 pairs (for signals)	28m
αiCZ sensor	A66L-0001-0367	0.18mm^2, 10 pairs (for signals and power supply)	18m When three power lines is used
αiBZ sensor (conventional type)	A66L-0001-0367	0.18 mm^2, 4 conductors (for power supply) 0.18mm^2, 5 pairs (for signals)	36m When two power lines is used
αi positioncoder	A66L-0001-0286	0.5mm^2, 6 conductors (for power supply) 0.18mm^2, 3 pairs (for signals)	7m When one power line is used
αi positioncoder S	A66L-0001-0286	0.5mm^2, 6 conductors (for power supply) 0.18mm^2, 3 pairs (for signals)	7m When one power line is used

When a cable other than one of the recommended cables above is used, the voltage drop in the cable must be within 0.2 V for a +5 V power supply.

(Tip)

Maximum cable length L can be found from the following formula:

$L[m] \leq 0.2[V] \times n[line] \div 2 \div I[A] \div R[\Omega/m]$

n : Number of power lines (number of +5V or +15V lines)

I : Current consumption of the detector

R : Resistance of a wire used for a power line

Detector	Current consumption
αiM sensor (pulse generator)	0.035A
αiMZ sensor, αiBZ sensor (built-in sensor)	0.05A
αiCZ sensor	0.15A
αi Positioncoder	0.35A
αi Positioncoder S	0.35A

D.2 SERVO CABLE LENGTH (WHEN RECOMMENDED CABLES ARE USED)

Recommended cable	Cable structure	Maximum cable length
A66L-0001-0460	0.3mm^2, 5 conductors (for power supply) 0.20mm^2, 1 pair (for signals)	28m
A66L-0001-0462	0.5mm^2, 5 conductors (for power supply) 0.20mm^2, 1 pair (for signals)	50m
A66L-0001-0481	0.3mm^2, 5 conductors (for power supply) 0.18mm^2, 1 pair (for signals)	28m
A66L-0001-0491	0.5mm^2, 5 conductors (for power supply) 0.18mm^2, 1 pair (for signals)	50m

When a cable other than recommended cable is used, ensure that the sum of the resistances of 0 V and 5 V is 2 ohms or less.

E POWER LINE FOR SERVO MOTOR AND AMPLIFIER

Appendix E, "POWER LINE FOR SERVO MOTOR AND AMPLIFIER", consists of the following sections:

E.1 SELECTING A POWER CABLE 435

E.1 SELECTING A POWER CABLE

Select the cable specification by considering the following conditions for use:

<1> Motor current rating or current needed in use on a real machine
<2> Cable type (heat resistance temperature, etc.)
<3> Environment in which the cable is installed (operating ambient temperature, etc.)
<4> Need of water proofing (pay attention to the diameter of the applicable cable clamp)
<5> Certification for CE marking (compliance with various safety standards and EMC standard)
<6> Insulation distance between the cable and terminal is secured at the time of wiring.

Examples of selecting a heavy-duty power cable are shown below. Fully check the cable specifications based on the actual use conditions and use an example below.
The cable diameters are determined based on JCS No. 168 D (1980), "Allowable Currents for Power Cables (1)."

Selection example of power line (reference)

[Selection example 1]

- Heavy-duty power cable specification :
  Maximum allowable conductor temperature 60°C

Cable diameter [mm^2]	Environment temperature 30°C Allowable current value [Arms]	Receptacle contact specification
0.75	Up to 11	SS size 1318986-6
1.25	Up to 15	S size 316040-6
2	Up to 19	S size 316040-6
3.5	Up to 27	M size 316041-6
5.5	Up to 35	M size 316041-6
8	Up to 43	L size 1318697-6
14	Up to 56	Crimp terminal only

[Selection example 2]

- Heavy-duty power cable specification :
  Maximum allowable conductor temperature 80°C

Cable diameter [mm^2]	Environment temperature 55°C Allowable current value [Arms]	Receptacle contact specification
0.75	Up to 9.2	SS size 1318986-6
1.25	Up to 12.7	S size 316040-6
2	Up to 16.3	S size 316040-6
3.5	Up to 23.4	M size 316041-6
5.5	Up to 31.2	M size 316041-6
8	Up to 38.3	L size 1318697-6

[Selection example 3]

- Fire-retardant polyflex wire or equivalent to LMFC manufactured by The Furukawa Electric Co., Ltd.:
  3 wire bundles
  Maximum allowable conductor temperature 105°C

Cable diameter [mm^2]	Environment temperature 30°C Allowable current value [Arms]	Environment temperature 55°C Allowable current value [Arms]
0.75	Up to 12	Up to 10
1.25	Up to 16	Up to 13
2	Up to 21	Up to 17
3.5	Up to 32	Up to 26
5.5	Up to 43	Up to 35
8	Up to 55	Up to 44
14	Up to 79	Up to 64
22	Up to 113	Up to 92
30	Up to 137	Up to 112
38	Up to 160	Up to 131
50	Up to 190	Up to 155
60	Up to 220	Up to 180
80	Up to 269	Up to 219

Wire diameter versus AWG number table (reference)

Cable diameter [mm^2]	AWG number
0.8226	AWG18
1.307	AWG16
2.082	AWG14
3.309	AWG12
5.262	AWG10
8.368	AWG8
13.30	AWG6
21.15	AWG4
33.62	AWG2
42.41	AWG1
53.49	AWG1/0
67.42	AWG2/0
85.03	AWG3/0
107.2	AWG4/0

Selection example of servo motor power line (reference)

Example 1)

A heavy-duty power cable is used for the αi F22/3000 when the ambient temperature is 55°C.

- Check the continuous current rating of the servo motor with the applicable servo motor specification.
  (See descriptions about the stall current of the servo motor.)
  In this example, it is 18.4 Arms.
- Select a cable wire diameter from [Selection example 2] in this section.
  In this example, it is 3.5 mm^2.

Selection example of spindle motor power line (reference)

Example 1)

A polyflex wire is used for the αi I 8/8000 when the ambient temperature is 55°C.

- Check the continuous current rating of the spindle motor with the applicable spindle motor specification.
  (See descriptions about the stall current of the servo motor.)
  In this example, it is 43 Arms.
- Select a cable wire diameter from [Selection example 3] in this section.
  In this example, it is 8 mm^2.

F MEASURES AGAINST NOISE FROM SERVO AMPLIFIERS

This appendix describes what causes noise when servo amplifiers are used to drive servo or spindle motors. It also explains measures that can be taken to protect equipment from noise.
When installing machines, the user is kindly requested to previously arrange measures against noise that may occur in the machines.

Appendix F, “MEASURES AGAINST NOISE FROM SERVO AMPLIFIERS,” consists of:

F.1 NOISE OCCURRENCE IN SERVO AMPLIFIERS.....439
F.2 NOISE TYPES.....440
F.3 ANTI-NOISE MEASURES.....442
F.4 MISCELLANEOUS 450

F.1 NOISE OCCURRENCE IN SERVO AMPLIFIERS

Shown below is an outlined configuration of a servo amplifier.

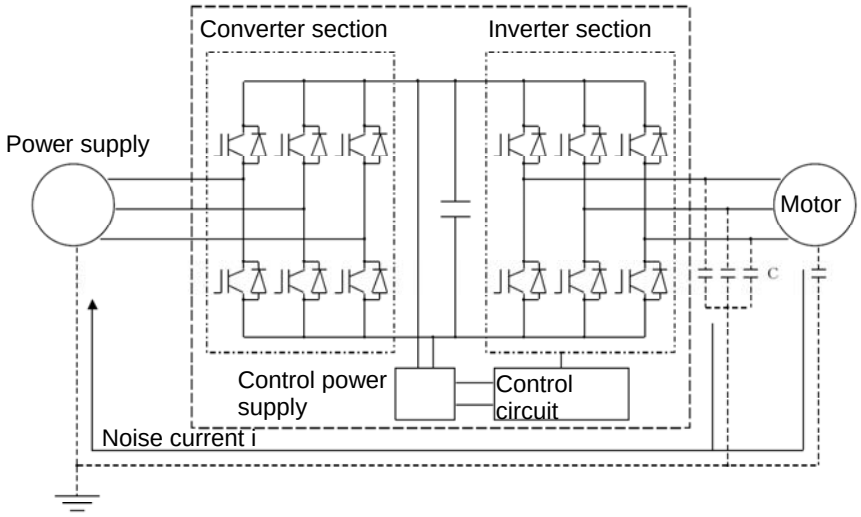

Fig. F-1 Outlined servo amplifier configuration

The servo amplifier shown above converts AC to DC with its converter section and controls the rotation speed of the motor under PWM control by turning ON/OFF the 6 transistors in the inverter section.

Turning the 6 transistors ON/OFF at high speed results in switching noise occurring. This high-speed ON/OFF switching releases noise current (i) to the ground through the stray capacitance (C) between the cable and motor on every switching cycle. The magnitude of the noise current (i) is represented by:

$i = C \times dV/dt$

As the expression tells, the noise current is proportional to the stray capacitance (C) and the transistor switching speed (dV/dt). Because the frequency band of this noise is below about 30 to 40 MHz, it affects equipment (such as AM radio) that uses a low-frequency band. But it hardly affects equipment (such as FM radio and TV) that uses higher frequency bands.

Described so far is how noise occurs in switching transistors to drive motors.

Meanwhile, if a servo amplifier regenerates power (recirculates motor rotation energy to the power supply during deceleration) when a motor driven by it decelerates, the operation of devices that share the power supply may be affected by voltage fluctuations resulting from current phase commutation for power regeneration.

F.2 NOISE TYPES

Noise that occurs in servo amplifiers can be roughly grouped into any of the following three types.

(1) Conduction noise

Conduction noise occurs in a servo amplifier, passes through a conductor, such as wire, and enters a device connected to the same power line as the servo amplifier, thus affecting the device.

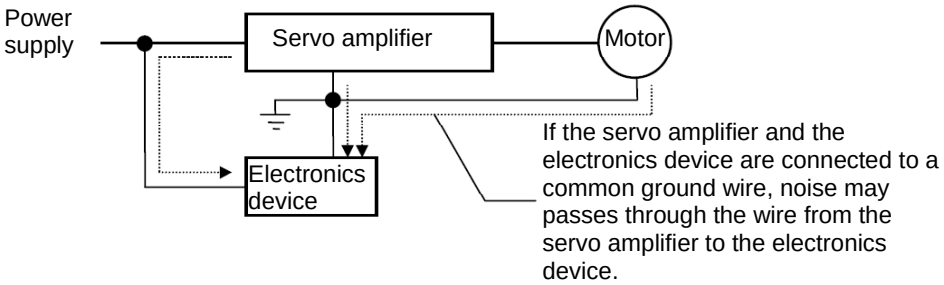

Fig. F2(1) Conduction noise

(2) Induction noise

Induction noise is caused on the power line or signal line of a peripheral device through induction by putting the line close to an electric line through which noise current is flowing.

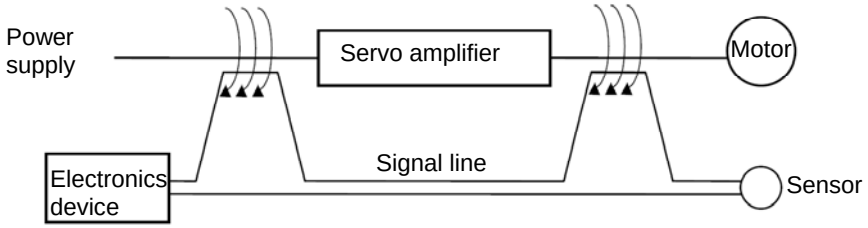

Fig. F2(2) Electromagnetically induced noise

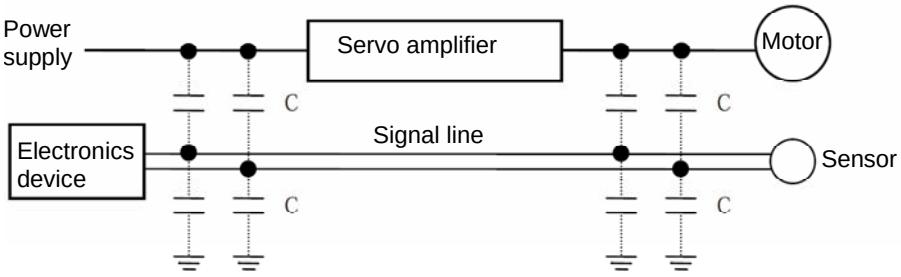

Fig. F2(3) Electrostatically induced noise

(3) Radiation noise

Radiation noise occurs in a servo amplifier and is radiated into the air from that power supply line or power line connected to the servo amplifier which acts as an antenna.

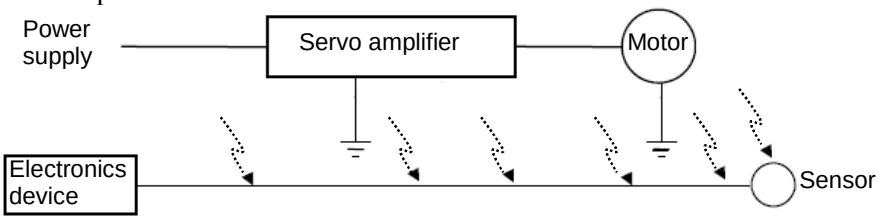

Fig F2(4) Radiation noise

Noise can propagate in diverse ways. In addition, its effect varies depending on how the system is configured.

F.3 ANTI-NOISE MEASURES

It is difficult for the present technology level to prevent noise occurrence completely. So, it is necessary to arrange economic anti-noise measures according to the level of the noise of interest and the situations of equipment installation.

F.3.1 Pre-Installation Arrangement

If a noise problem occurs after equipment has been installed, it may cost a lot of money to solve the problem. So, it is necessary to take the following measures previously.

<1> Separate signal lines from power supply and motor power lines.
<2> Put power supply and motor power lines in metal conduits.
<3> Carry out adequate grounding work, and lay down proper grounding wires (for preventing leakage-caused hazard shocks as well).
<4> Use as thick and short grounding wires as possible.

The “Electrical Equipment Technical Standards” stipulates grounding methods as listed below.

Grounding type	Applicable equipment	Grounding resistance
Class-3 grounding	300 VAC or lower	100 Ω or lower
Special class-3 grounding	300 VAC to 600 VAC	10 Ω or lower

F.3.2 Anti-Noise Measures

Suppressing noise from equipment effectively requires applying system-wide anti-noise measures by cooperating with devices that may be affected by the noise.

(1) Anti-measures that can be taken in noise-affected devices
<1> Separate signal lines for noise-affected devices from power supply and motor power lines to reduce effect by noise.
<2> Separate power supplies between noise-generating and noise-affected devices to block off noise paths.
<3> Increase the impedance of signal lines to noise, for example, by passing the signal lines through ferrite core beads.
<4> Use line filters or shielded wires for signal lines to prevent noise from entering the signal lines.

(2) Anti-measures that can be taken in noise-generating devices
<1> Lower noise levels by installing anti-noise devices such as noise filters.
<2> Isolate noise, using metal conduits or shielded wires.
<3> Block off noise paths, using isolation transformers.

(3) Noise type-specific anti-noise measures
Noise types are described in F.2. Which anti-noise measure is effective varies depending on the noise type of interest. In addition, which anti-noise measure is effective and how effective it is also vary depending on the environment (such as power supply and radio wave strength) in which the machine is used, the situations of machine operation, and the noise immunity level of the equipment involved.
Take the most effective measure by referencing Table F.3.2.

Table F.3.2 Noise type-specific anti-noise measures

	Measure	Noise type		
		Conduction noise	Induction noise	Radiation noise
Wiring and grounding	Separate signal lines from power supply and power lines	o	o	
	Use metal conduits		o	o
	Avoid parallel wiring		o	
	Shied power supply and power lines			o
	Ground securely		o	
Anti-noise device (noise source side)	Line filter	o		o
	Isolating transformer	o		o
Anti-noise device (noise receiving side)	Ferrite core used with signal lines		o	o
	Signal line shielding		o	o
Others	Separating power supplies	o		

F.3.3 Concrete Examples of Anti-Noise Measures

(1) AM radio

<<Symptom>>

When a motor at a factory was energized, radios at the factory sounded bzzz, making voice and music inaudible.

<<Probable cause>>

The radios received radiation noise from the power line of the motor, which is connected to a servo amplifier.

<<Measure>>

<1> Installed a noise filter (LC filter) on the power supply side.
<2> Installed a capacitor across each input phase line and ground.

<<Caution>>

- These measures may not be effective in weak-wave areas, such as residential areas and mountain-ringed regions.
- If a noise filter is used, make the wiring between the filter and servo amplifier as short as possible.

(2) AM radio

<<Symptom>>

When a machine at a factory was operated, radios in neighboring houses and cars parked outside the factory received noise.

<<Probable cause>>

The factory and the neighboring houses shared a pole-mounted transformer, and radiation noise from the wiring on the power supply side affected the radios. Alternatively, it was likely that conduction noise from the power supply line might affect the radios.

<<Measure>>

<1> Installed a noise filter (LC filter) on the power supply side.
<2> Supplied the neighboring houses with power from another pole-mounted transformer.

<<Caution>>

- If a noise filter is used, make the wiring between the filter and servo amplifier as short as possible.

(3) Refrigerator

<<Symptom>>

Refrigerator motors in neighboring houses growled when a spindle at a factory decelerated.

<<Probable cause>>

The factory and the neighboring houses shared a pole-mounted transformer, causing voltage distortion resulting from power regeneration at spindle deceleration to make the refrigerator motors growl.

<<Measure>>

<1> Supplied the neighboring houses with power from another pole-mounted transformer.
<2> Readjusted the capacity of power supply equipment.

<<Caution>>

- In many cases, factories in residential areas receive power from pole-mounted transformers for their equipment and share power with residential buildings, leading to an insufficient power capacity for the factory equipment. In these cases, power distortion become large, being likely to affect home electrical power.

(4) Telephone

<<Symptom>>

When a machine at a factory was operated, the telephone in a house across the road received noise.

<<Probable cause>>

When high-frequency current from a servo amplifier or motor returned through the grounding of a pole-mounted transformer, it shunted to the shielded ground of the telephone line, inducing noise electrostatically.

<<Measure>>

<1> Supplied the house with power from another pole-mounted transformer.

<2> Inserted a capacitor between the servo amplifier power supply and its grounding.

<<Caution>>

- Noise filters (LC filters) may not be effective to suppress noise having audio frequency components.
- Inserting a capacitor between the servo amplifier power supply and its grounding may cause a ground-fault circuit interrupter to trip because of an increasing leakage current.

(5) FAX

<<Symptom>>

When a machine at a factory was operated, a fax machine in a neighboring firm failed in transmission and also noise entered the telephone at the factory. The telephone uses a 100 V power source. Disconnecting the 100 V power source from the telephone resumed normal communication.

<<Probable cause>>

A pole-mounted transformer was shared, and conduction noise from the power line caused the malfunction.

In addition, it was likely that induction noise might also occur on wiring as in (4).

<<Measure>>

<1> Supplied the residential building with power from another pole-mounted transformer.

<2> Inserted an insulating transformer (noise-cut transformer) in the power supply circuitry.

<<Caution>>

- LC filters may not be effective for low-frequency noise as in (4).

F.3.4 Anti-Noise Measures for Power Supply Equipment and Grounding

If a noise problem still occurs in a machine already having general anti-noise measures, it may be solved by enhancing the grounding of the machine or installing a noise filter in it as stated below.

(1) Separating grounds

To prevent noise-related trouble from a machine, it is recommended to isolate the ground of the machine from other equipment when the machine is installed.

- What to do
  Isolate the ground of the machine's power transformer from the ground of the power supply transformer for equipment that may malfunction because of noise from the machine.
- Effect
  Isolating the grounds prevents noise from going from the machine to other equipment via a "common ground" so that the equipment will not be affected.

See Material 1 for a practical example.

(2) Enhancing machine grounding

If the impedance of an existing power supply grounding line for a machine (a large multi-axis machine in particular) is high and generates a noise voltage across the machine housing and the ground of the factory, it is recommended to enhance grounding.

- What to do
  Enhance grounding by adding a grounding wire or a ground.
- Effect
  If the impedance of the power supply grounding line is high and it is impossible for the existing power supply grounding wires to provide a good electrical ground, lower the grounding impedance of the machine by adding grounding wires.

See Material 2 for a practical example.

(3) Installing noise filters

If noise from a machine affects other devices through power supply lines adversely, it is recommended to install a noise filter.

- What to do
  Install a noise filter in the input power supply of the machine.
- Effect
  The noise filter prevents noise going from the machine to other devices through power supply lines to affect them adversely.

See Subsection 3.1.3.12 for the noise filters we recommend.

Material 1: Example of Separating Grounds

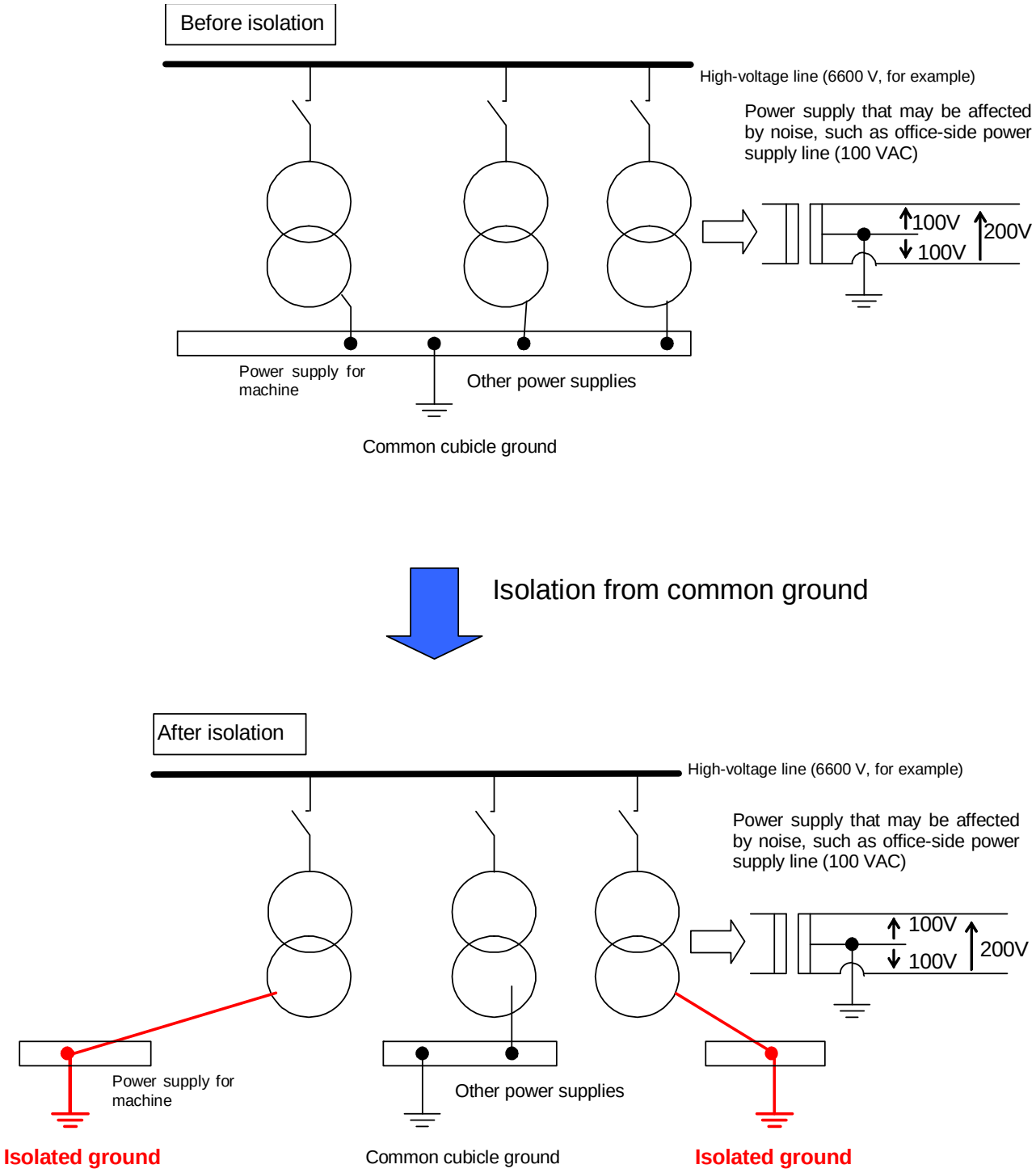

Material 2: Example of Enhancing Grounding

If the impedance of a power supply grounding line is high and it is impossible for the grounding of the power supply to provide a good electrical ground, enhance grounding by adding a grounding line or a ground so that the grounding impedance of the machine is lowered to suppress a noise voltage.

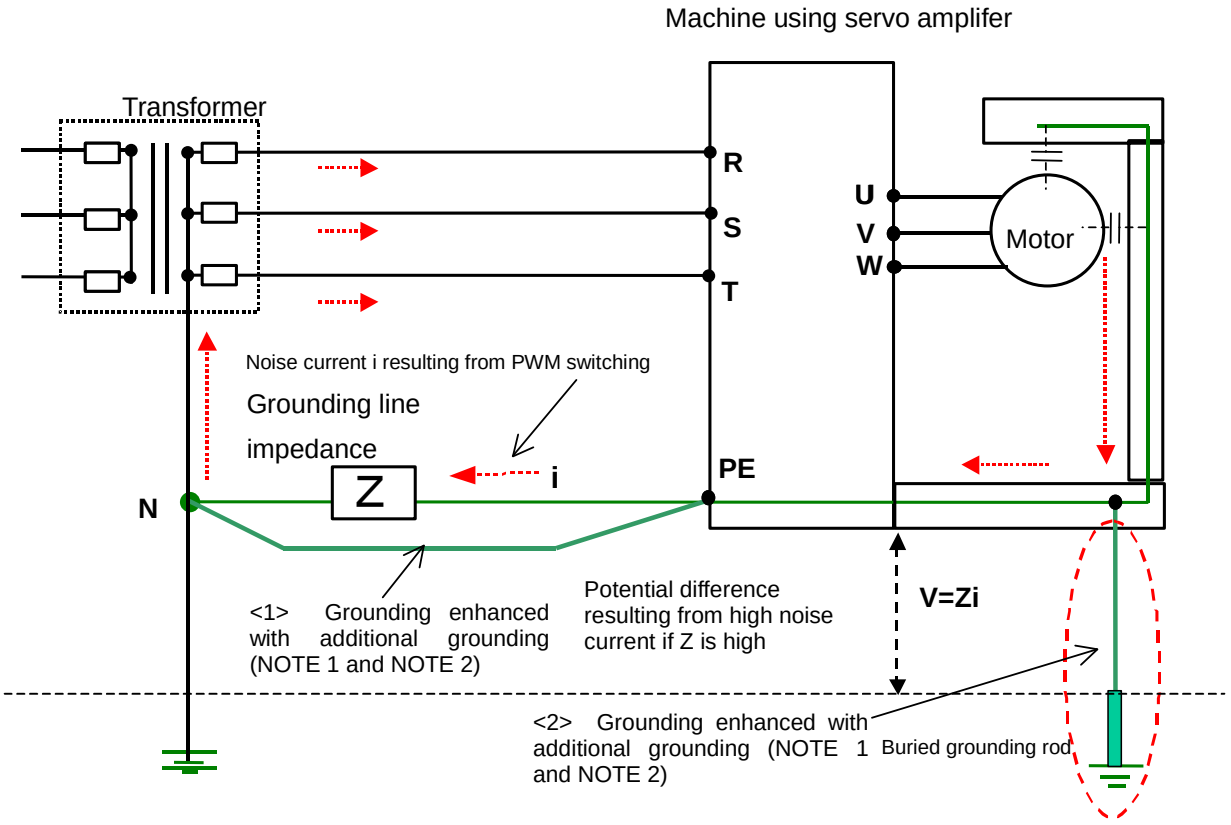

NOTE
1 It is recommended to use mesh cables having a satisfactory high-frequency property for the additional grounding of a machine.
2 For TN connections, use additional grounding <1> shown above.
For TT connections, use additional grounding <2> by, for example, burying a grounding rod near the machine.

F.3.5 Anti-Noise Devices

As described earlier, what anti-noise measure to take and what anti-noise device to use vary depending on the type of the noise of interest, where the noise occurs, and how large the effect of the noise is. This subsection briefly describes some anti-noise devices. They should be used to take an appropriate measure according to the situations.

(1) Noise filter

A noise filter can be inserted between a power supply and a servo amplifier to reduce high-frequency noise (noise voltage across terminals) superimposed on a supply voltage. Noise filters are effective on the AM radio frequency band.

Example products:

3SUP-H/3SUP-D Series from Okaya Electric Industries Co., Ltd.
NF3000/HF3000 Series from Soshin Electric Co., Ltd.
ZRCT/ZRGT Series from TDK
LH-3/LH-4 Series from Tokin

(2) Capacitor

A capacitor can be connected directly to a servo amplifier to reduce radiation noise from electrical power lines. Capacitors have a low attenuation property, compared with noise filters. However, they may be effective depending on the situation of radio waves. Select a ground-fault circuit interrupter by giving consideration to leakage current.

Example products:

3XYB-105･104 from Okaya Electric Industries Co., Ltd.
LW3/LY3 Series from Soshin Electric Co., Ltd.

(3) Zero-phase reactor

A zero-phase reactor can be inserted between a power supply and servo amplifier to reduce radiation noise from electrical power lines.

Example products:

RC Series from Soshin Electric Co., Ltd.

(4) Noise-cut transformer

A noise-cut transformer can be inserted between a power supply and device to reduce conduction noise (low frequency) passing through electrical power lines or grounding lines.

Example products:

FFT Series from Fuji Electric

F.4 MISCELLANEOUS

(1) Harmonics and noise

A harmonic is a sinusoidal wave having a frequency that is an integral multiple of the fundamental frequency (50/60 Hz). Usually, harmonics having a frequency of several tens of kHz or higher are specifically called noise, while those having a frequency of up to several kHz are referred to, using the same term (harmonics).
In many cases, noise occurs in inverter sections, and harmonics, in converter sections. What problem occurs and what measure to take differ between noise and harmonics.
For harmonics, the “Harmonics Suppression Measure Guideline” is available.

(2) References

“Skillful Use of Inverters (Electrical Noise),” The Japan Electrical Manufacturers’ Association

G EXAMPLES OF RECOMMENDED POWER MAGNETICS CABINETS FOR SERVO AMPLIFIER INSTALLATION

Appendix G, "EXAMPLES OF RECOMMENDED POWER MAGNETICS CABINETS FOR SERVO AMPLIFIER INSTALLATION," consists of:

G.1 OVERVIEW 452
G.2 DESCRIPTIONS.....453

G.1 OVERVIEW

In order to prevent the reliability of servo amplifiers from lowering because of their environments, it is important to seal up the power magnetics cabinet for the servo amplifiers and to give consideration to the environment of the inside of the cabinet.
This document presents cautions to be observed when designing power magnetics cabinets. They should be useful to those who are going to design power magnetics cabinets.

Subsection No.	Subsection heading	Summary
G-2-1	Power Magnetics Cabinet Seal-up	Explains how to seal up power magnetics cabinets. Protecting electronics circuits in servo amplifiers requires installing them in a sealed power magnetics cabinet.
G-2-2	Environments for Amplifier Heat Sink Sections	Explains how to reduce extraneous materials, such as cutting fluid, oil mist, and cutting chips, that may get on heat sink sections. Those extraneous materials can lower the cooling efficiency of the servo amplifiers (leading to a lowered amplifier performance) and reduce the operating life of electronics components (power semiconductor devices, fan motors, etc).
G-2-3	Environments for Amplifier Installation	Describes cautions regarding environments in which amplifiers are installed. An environment impeding heat generation can lower the performance of the amplifiers and shorten the operating life of electronics components (power semiconductor devices, fan motors, etc).

G.2 DESCRIPTIONS

G.2.1 Power Magnetics Cabinet Seal-up

This subsection explains how to seal up power magnetics cabinets.
In order to protect servo amplifier electronics circuits, it is necessary to house the servo amplifier in a sealed power magnetics cabinet.

<1> Keep the power magnetics cabinet free of any hole or gap through which external air can enter the cabinet (Fig. 1). Do not make any hole in a cabinet wall panel; fitting air filters in holes cannot necessarily seal up the cabinet.
<2> Do not make any hole in the cabinet wall panel to install a fan motor in the hole (Fig. 1). In order to release heat from the cabinet to the outside, use a device (such as a heat exchanger or cooler) having a structure that will not hamper seal-up of the cabinet.
<3> Keep all joining areas of cabinet wall panels free of gaps. If cabinet wall panels are partly bonded (for example, spot-welded), fill any gaps between bonded areas with sealant, for example, in order to seal up the cabinet.

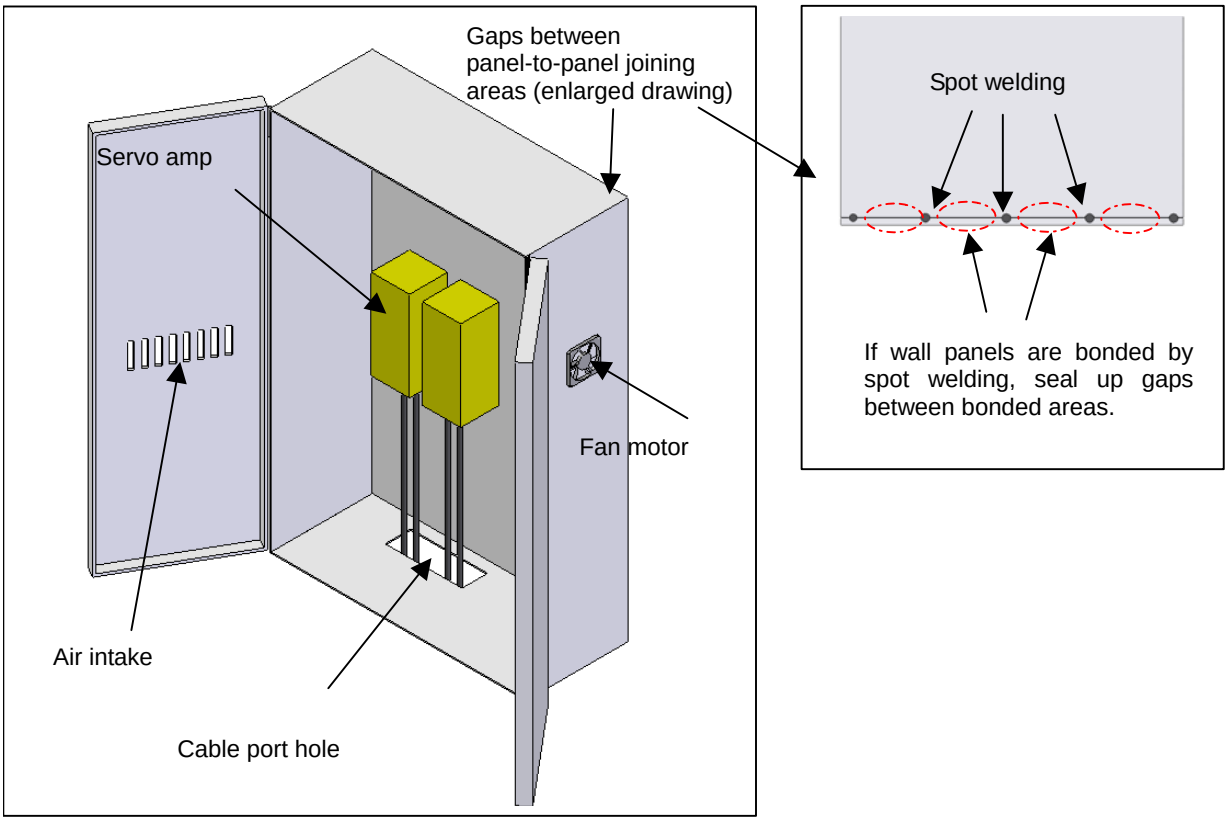

Fig. 1 Example of power magnetics cabinet not sealed well (example of poor

<4> Keep the cable port free of gaps (Fig. 1).
(Concrete method)

1) Fit a conduit in the cable port hole (Fig. 2).
2) If it is impossible to fit a conduit by any means, at least keep the cable port free of gaps. Shown below is an example of sealing by fitting sponge around cables (Fig 3). Do not allow cables to overlap with one on another; otherwise, gaps will occur around the cables. If there are many cables, separate them into several places.
3) If a cable duct is used as a cable port, be sure to seal up the duct. When leading cables into the duct, observe items 1) and 2).



Fig. 2 Fitting a conduit



Fig. 3 Sealing with sponge

<5> In order to prevent external air from entering through screw holes, observe the following:

1) Avoid making holes in cabinet wall panels as far as possible; for example, weld male screws (studs) to cabinet wall panels and use nuts with them (Fig. 4). Using cap nuts and applying sealant around them is also effective (Fig 5). When using cap nuts, give consideration to the length of screws used with the cap nuts.
2) For the top panel in particular, be sure to observe item 1), because extraneous materials, such as cutting fluid, can easily get on the panel.
3) If a screw hole is left unused (open) because of no screw being inserted (for example, a grounding terminal screw hole left unused), be sure to block it up.

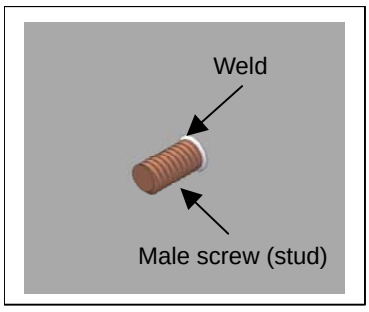

Fig .4 Welding male screw

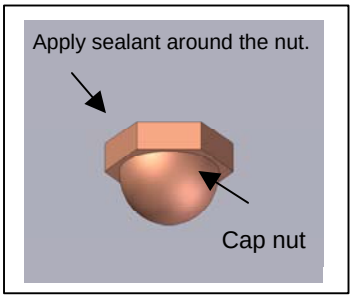

Fig. 5 Using cap nut

<6> Avoid allowing gaps in the portions where the door meets the door frame.

1) Seal the door, for example, by attaching gaskets to the inside edges of the door (Fig. 6).
2) When attaching gaskets, do not leave gaps between the gaskets, especially those at the corner of the door (Fig. 6).
3) If the cabinet has a double-door structure, use a gasket between the doors (Fig. 7).
4) If a hole is made in a door panel to fit a component in it, seal the hole with a gasket to secure seal-up.
5) To seal up the cabinet, be sure to lock the door.

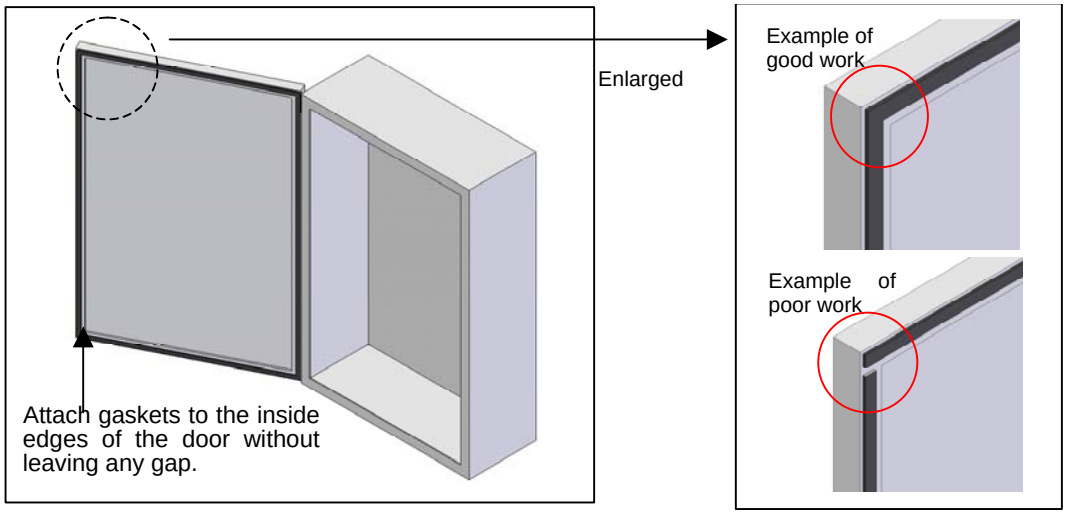

Fig. 6 Sealing doors

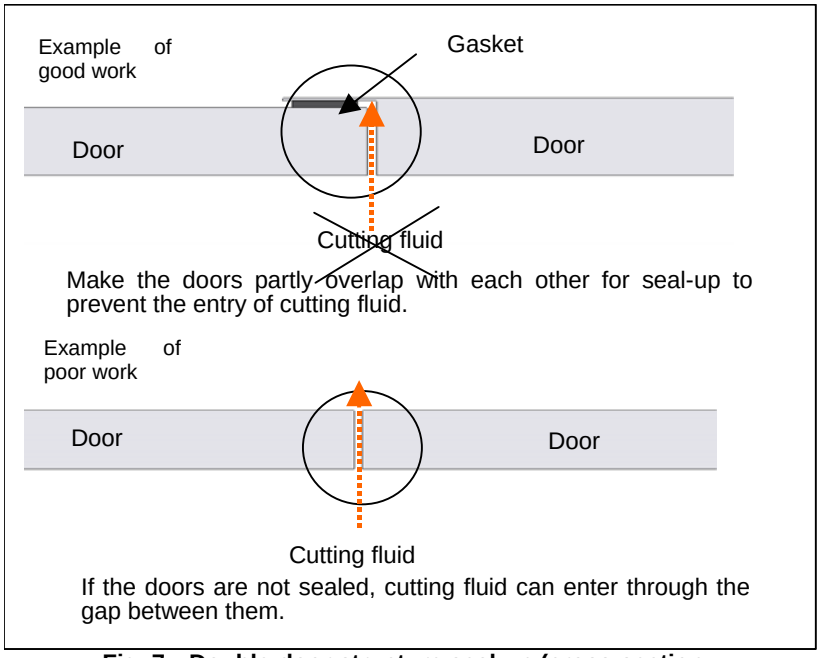

Fig. 7 Double-door structure seal-up (cross-section view of portion where the doors meet)

<7> Provide an underthroating at the portion where the power magnetics cabinet frame meets the door (Fig. 8) to prevent the entry of cutting fluid.

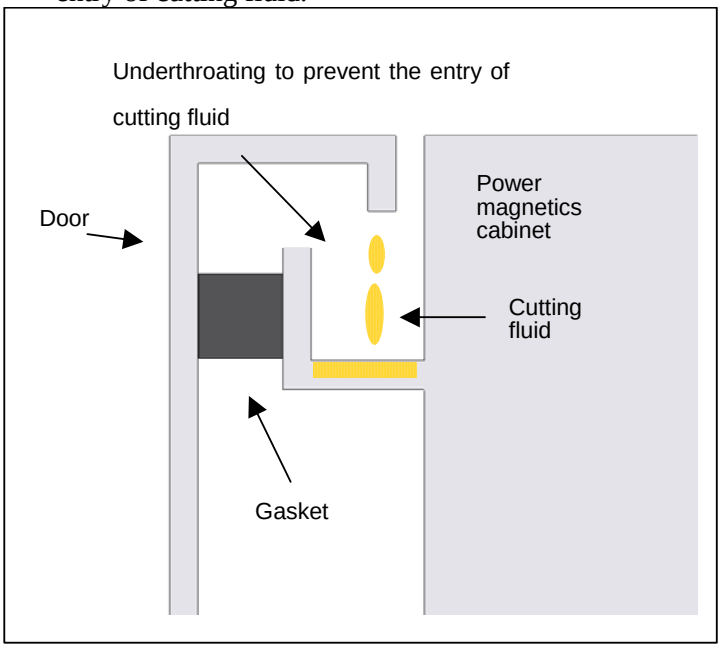

Fig. 8 Explanation of underthroating

<8> Lead cables into the power magnetics cabinet from below the cable port. This is intended to try to prevent cutting fluid entering the cabinet along cables (Fig. 9).

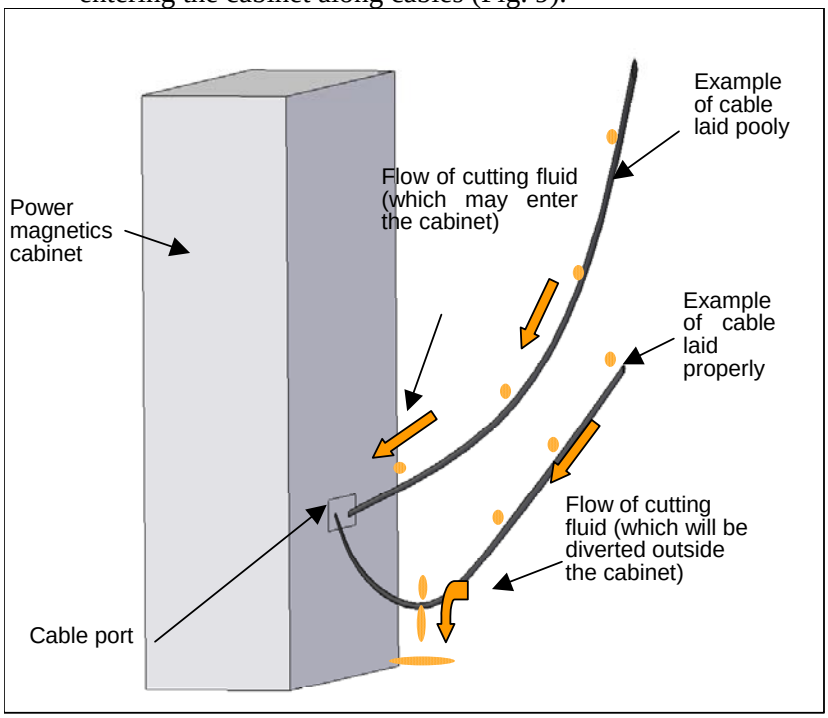

Fig. 9 How to lead in cables

<9> If holes are made in a power magnetics cabinet wall panel to install an amplifier, attach the supplied gaskets to the holes to seal up the cabinet. At each corner of the amplifier, make gaskets overlap with each other. If not (for example, gaskets are cut short), a gap may occur, leading to leakage (Fig. 10).

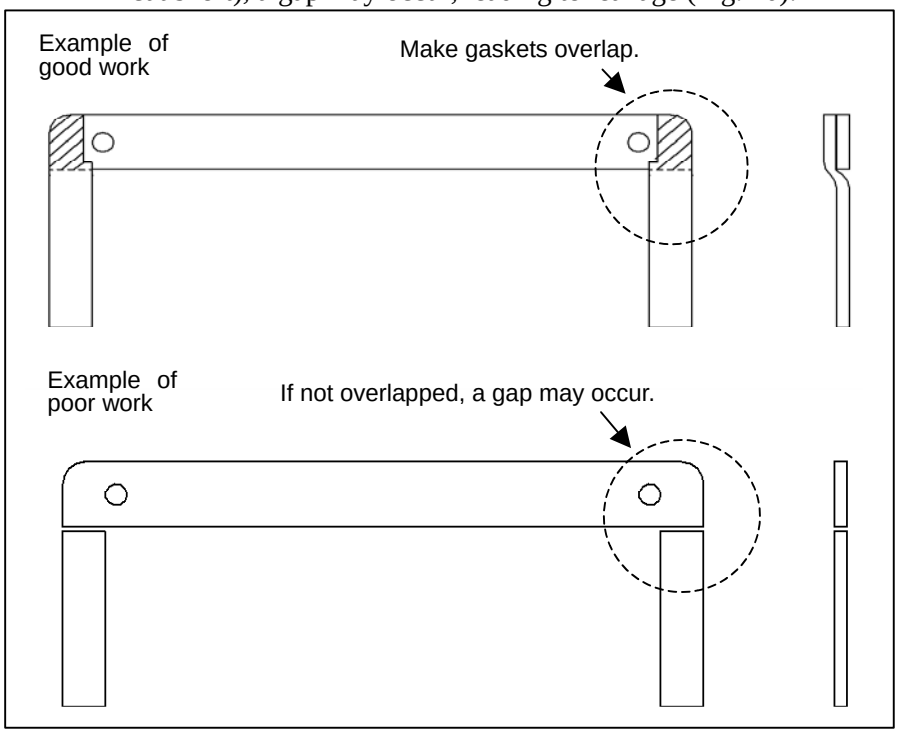

Fig. 10 How to attach gaskets

G.2.2 Environments for Amplifier Heat Sink Sections

This subsection explains how to prevent extraneous materials, such as cutting fluid, oil mist, and cutting chips, from getting on amplifier heat sink sections.
If extraneous materials, such as cutting fluid, oil mist, and cutting chips, get on servo amplifier heat sink sections or fan motors, they can lower the cooling efficiency (performance) of the servo amplifiers and shorten the operating life of electronics components (such as power semiconductor devices and fan motors).

<1> If a structure that takes in fresh air to cool a heat sink section is employed, be sure to enclose the heat sink section in a box having vent holes and cover the vent holes (both intake and discharge holes) with air filters to prevent the entry of cutting fluid mist (Fig. 11).
Select vent holes and air filters designed to release heat properly by giving consideration to the heat release property of the structure. Replace air filters at regular intervals; dirty air filters can lower the cooling efficiency.
Do not provide vent holes in the top panel; cutting fluid would accumulate in the air filter of any vent hole in the top panel and later drop into the box.

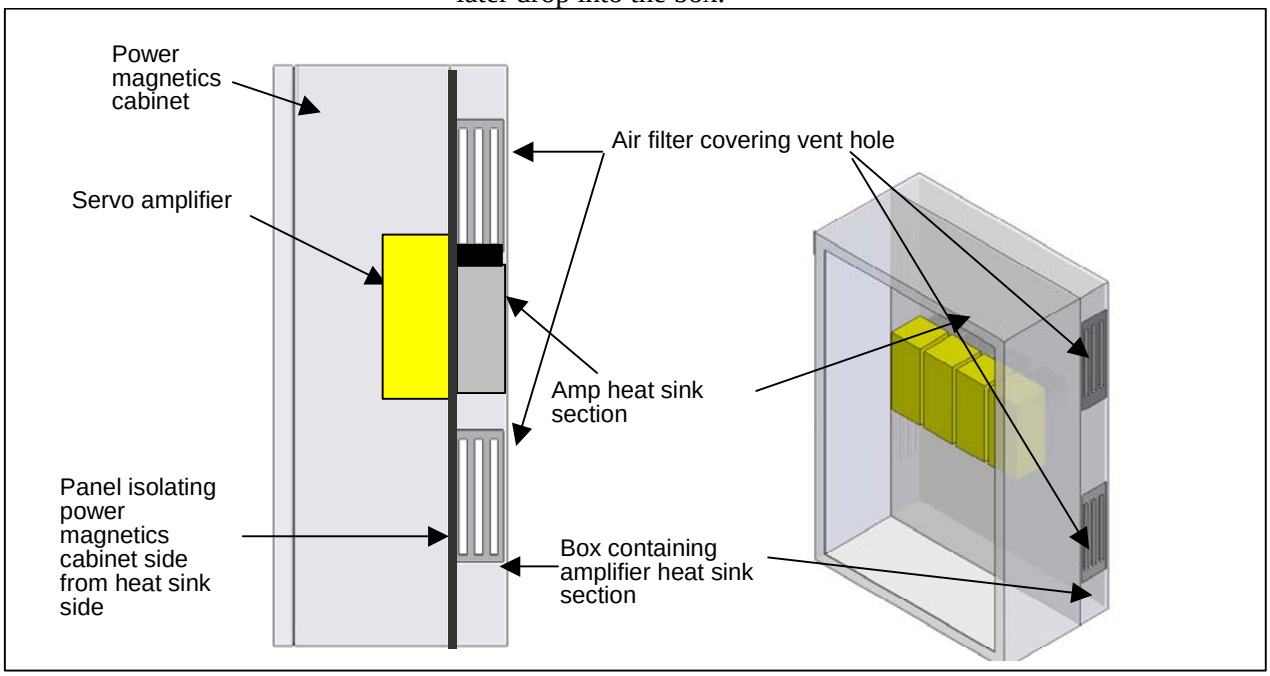

Fig. 11 Air filter locations

<2> Be sure to isolate the machining area from the amplifier heat sink section (Fig. 12); if cutting fluid or cutting chips get in direct contact with an amplifier heat sink section, its heat release property gets lowered (Fig. 13).

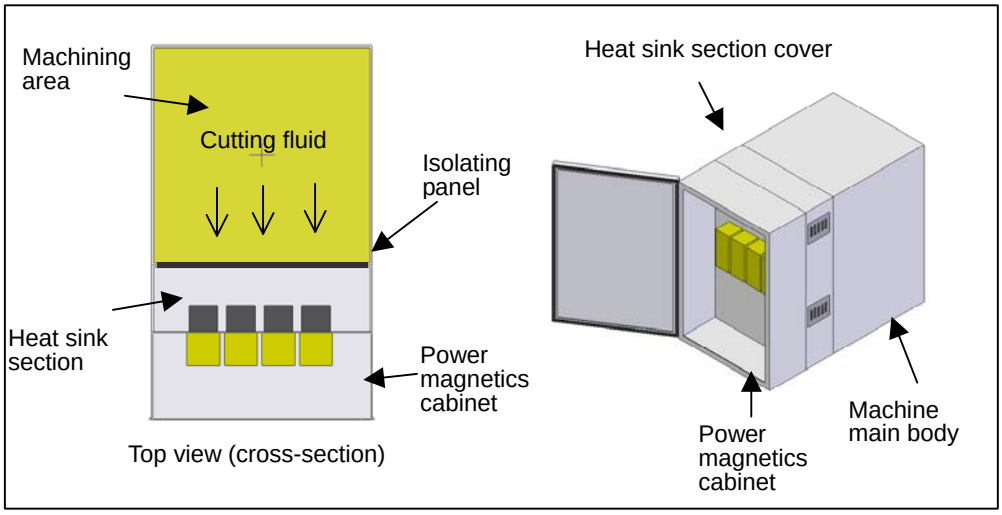

Fig. 12 Machining area isolated from amp heat sink section (example of good work)

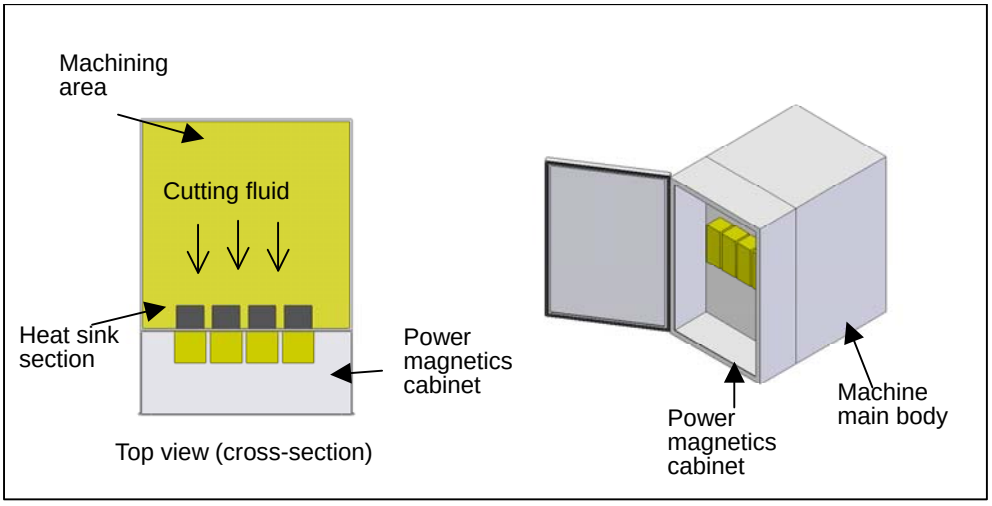

Fig. 13 Machining area and amp heat sink section sharing the same place (example of poor work)

G.2.3 Environments for Amplifier Installation

This subsection describes cautions to be observed with regard to environments for amplifier installation.
If the heat release property of the heat sink section of a servo amplifier gets lowered because of the servo amplifier installation environment being improper, it is likely that the amplifier performance may be lowered and the operating life of electronics components (such as power semiconductor devices and fan motors) may be shortened.

<1> Mounting heat exchangers
If the temperature inside the power magnetics cabinet is at least 10°C higher than the ambient temperature, use heat exchangers to cool the inside of the cabinet.
*1: When attaching a heat exchanger, fit gaskets around it to seal up the cabinet.
*2: Prevent air from heat exchangers from flowing directly onto amplifiers or electronics products; otherwise, it is likely that any dust and dirt in the cabinet may be blown to them.

<2> Installing a cooling fan for agitating air inside
Installing a cooling fan inside the power magnetics cabinet can homogenize the temperature and increase the heat release efficiency of the power magnetics cabinet (Fig. 14).
*1: Do not place any cable that may hamper air agitation near the cooling fan air outlet.
*2: Prevent air blowing from a cooling fan directly onto amplifiers or electronics products; otherwise, it is likely that dust and dirt in the cabinet may be blown to them.

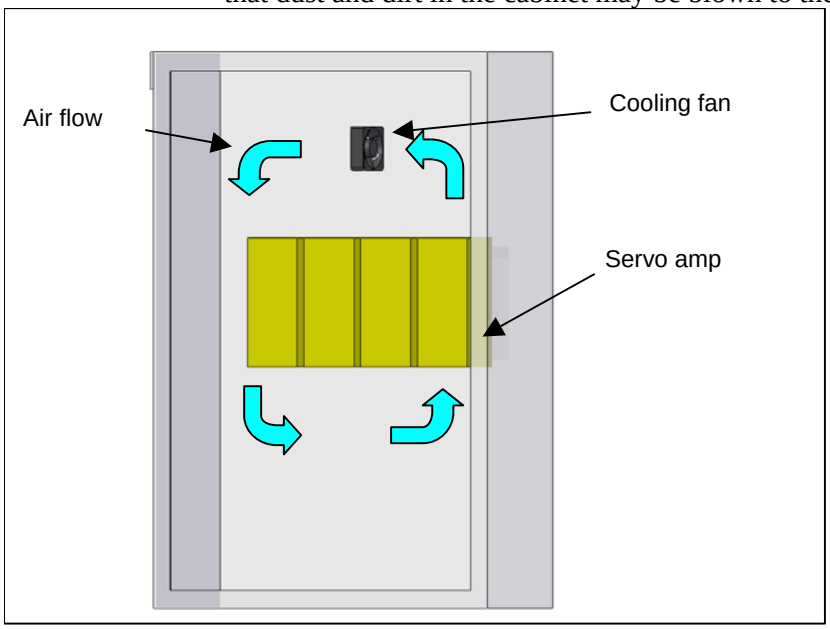

Fig. 14 Example of installing motor-driven fan for agitating air inside

<3> Using dehumidifying agent inside the power magnetics cabinet

Placing dehumidifying agent, such as dehumidifying sheets, in the power magnetics cabinet can prevent the reliability of servo amplifiers from lowering.

<4> How to install servo amplifiers

It is assumed that, when servo amplifiers are installed, they will be arranged in a raw. If you cannot help but arrange them in a column, observe the following (Fig. 15):

*1: Keep cooling air for the lower amplifier from flowing directly onto the upper amplifier; otherwise, the heat release property of the upper amplifier gets lowered, being likely to result in the upper amplifier failing to deliver its rated output.

*2: Keep the upper amplifier from blocking up the cooling air flow for the lower amplifier.

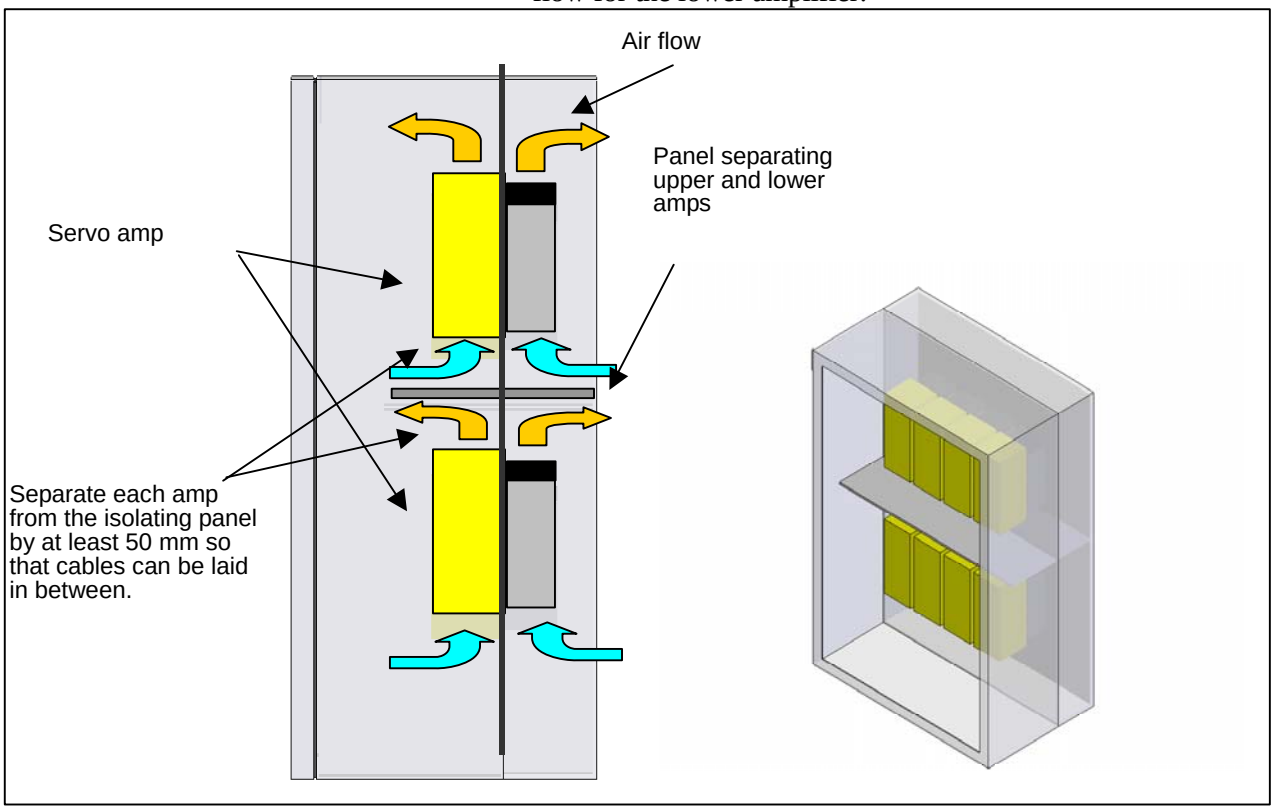

Fig. 15 Example of arranging amps in a column

H DC LINK TERMINAL BOARD SECTION PROTECTIVE COVER

Appendix H, "DC LINK TERMINAL BOARD SECTION PROTECTIVE COVER," consists of:

H.1 OVERVIEW 463
H.2 HOW TO MOUNT 464

H.1 OVERVIEW

Protective covers are available for the DC link terminal board section of the αi series servo amplifier unit. They can be used if necessary.

Ordering information: A06B-6110-K502
Quantity: 1 (4 required)

H.2 HOW TO MOUNT

Mount protective covers to the DC link terminal board as shown below.
Screw each protective cover with a tightening torqure of 3.5 to 4.5 Nm.

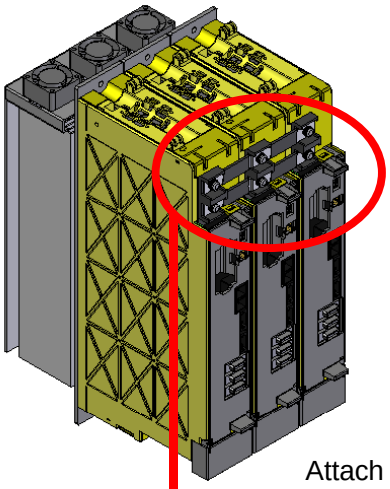

Enlarged

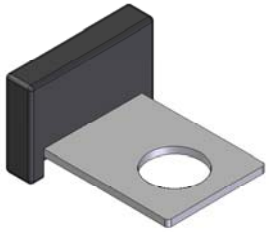

Protective cover
A06B-6110-K502

Attach protective covers (four) to the DC link terminal board of the amp at either end.

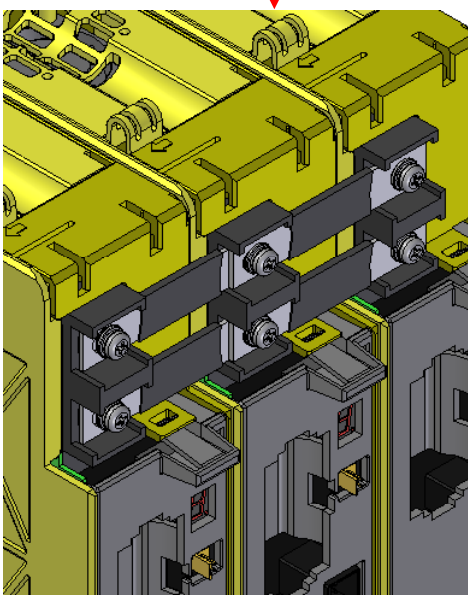

Before mounting

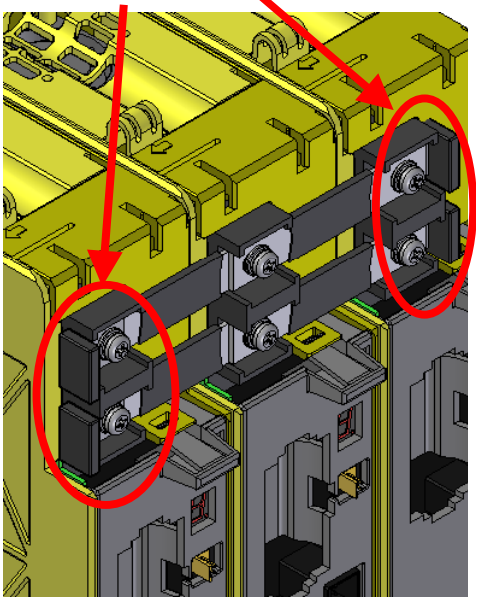

After mounting

POWER FAILURE DETECTION FUNCTION

Appendix I, “POWER FAILURE DETECTION FUNCTION,” consists of:

I.1 OVERVIEW 466
I.2 POWER FAILURE DETECTION SPECIFICATION 467
I.3 APPLICATION TO PREVENTION OF VERTICAL AXES FROM FALLING AT POWER FAILURE 469

I.1 OVERVIEW

The upgraded version incorporates a power failure detection function. This function can prevent a vertical axis from falling by applying the brake to the vertical axis promptly as directed by a power failure detection signal output from the αi PS after a power failure.

I.2 POWER FAILURE DETECTION SPECIFICATION

- The following voltage drops are detected as power failures:
  (1) Drop of a 3-phase voltage (L1, L2, or L3) input to the main circuitry of the αi PS
  (2) DC link voltage drop
  (3) Drop of a voltage (between pins 1 and 2 of connector CX1A) input to the control power supply of the αi PS
- Power failure signals are output through a photo MOS relay (Fig. 1).
- There are two power failure detection output channels, which operate the same way.

Fig. 1 Output circuit

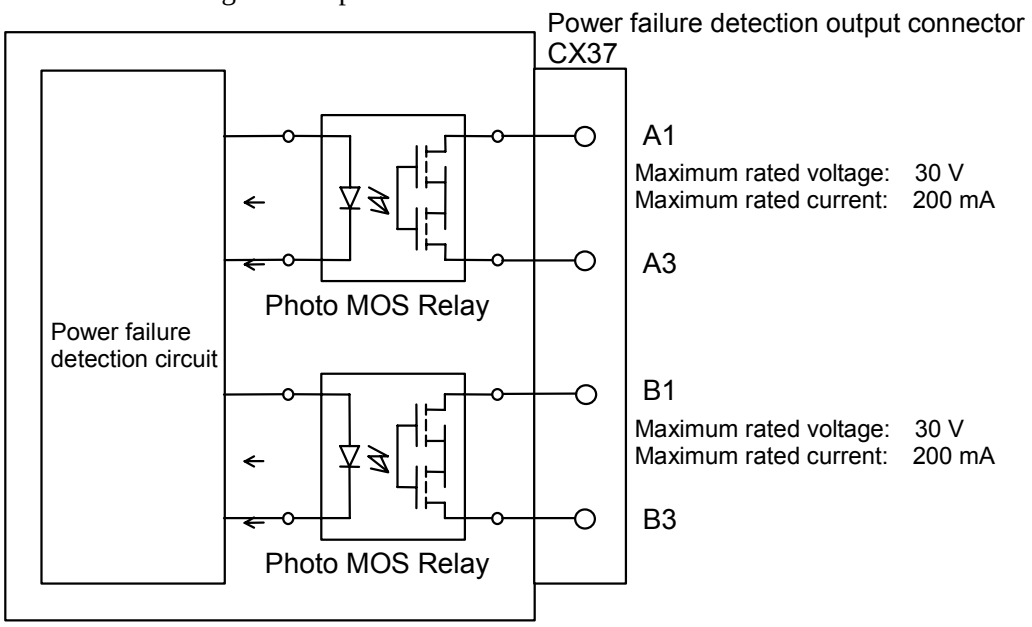

Connector specification:	AMP connector
Housing:	1-1318119-3
Contact :	1318107-1

- The power failure detection output is closed normally and becomes open at power failure (Fig. 2).
- The power failure detection output becomes open 10 msec after a power failure occurs. It becomes closed 15 msec after the power is resumed (Fig. 2).
- If an alarm condition occurs in the αi PS, the power failure detection output becomes open (in the same condition as for the detection of a power failure) (Fig. 2).

Fig. 2 Power failure detection output

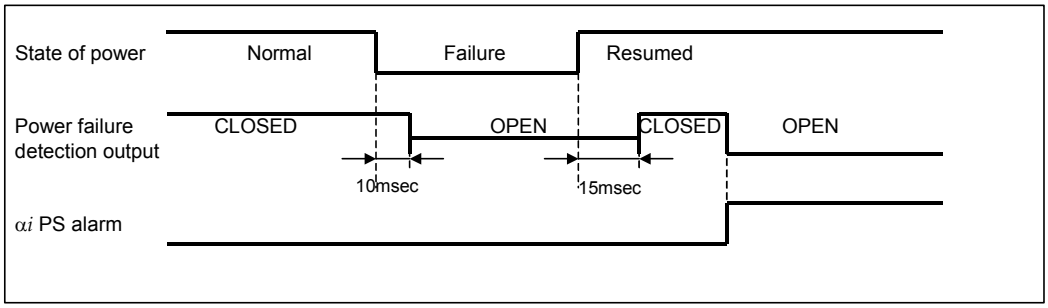

- The power failure detection output becomes closed within 1.5 sec after the control power (200 VAC) is applied to the αi PS, enabling power failures to be detected after the αi PS becomes ready (the LED display on the αi PS becomes "0").
- If the αi PS is not ready (the LED display on the αi PS is "-"), the power failure detection output remains closed.

Fig. 3 Conditions enabling power failure detection

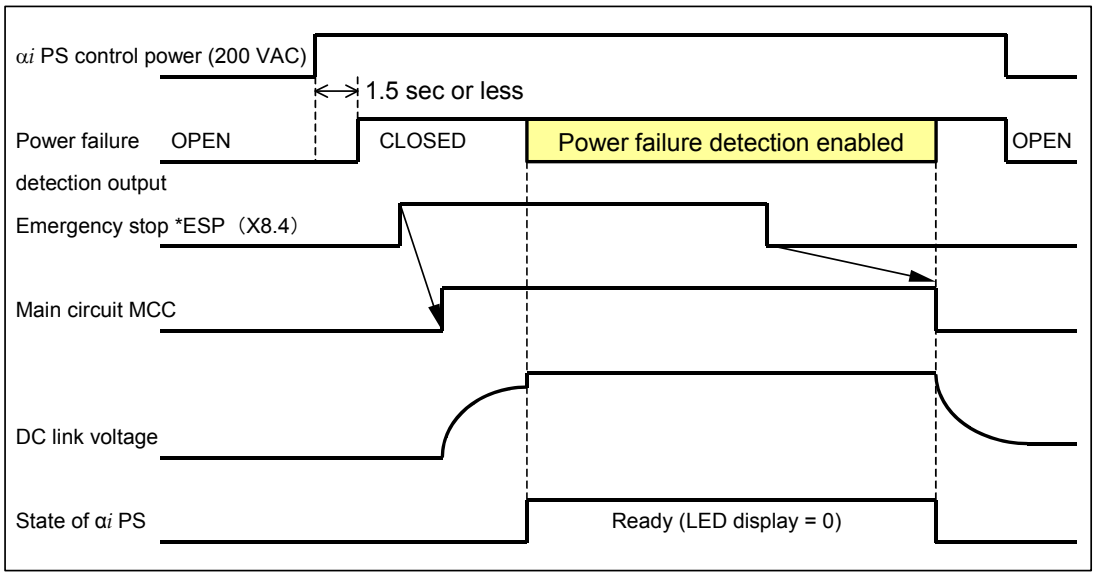

I.3 APPLICATION TO PREVENTION OF VERTICAL AXES FROM FALLING AT POWER FAILURE

Preventing a vertical axis from falling at power failure requires applying the brake to the vertical axis before its motor is deenergized. To put it another way, it is necessary to perform the following:

(1) Apply the brake promptly after the occurrence of a power failure.
(2) Keep the vertical axis motor energized since the occurrence of the power failure until the brake works.

Timing chart

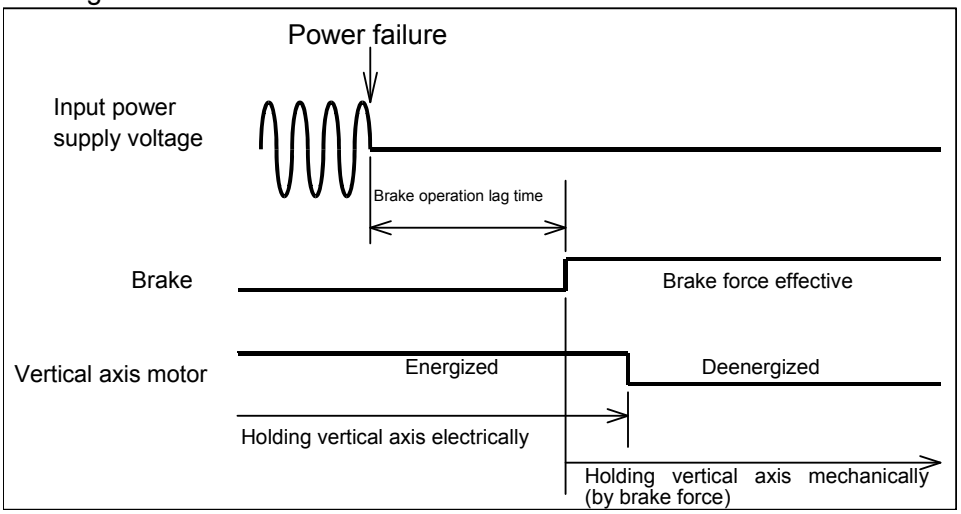

I.3.1 Procedure

(1) Configure a brake circuit that operates promptly after the occurrence of a power failure (Subsection I.3.2).
(2) Keep the vertical axis motor energized until the brake comes into operation (Subsection I. 3. 3).
- Check the control power supply hold time.
- Set parameters.

(3) Confirm the effect of the measure taken (Subsection I.3.5).

I.3.2 Brake Circuit

The emergency stop signal (*ESP) and the brake operation relay must be operated together on a power failure detection output from the αi PS.
Configure a brake circuit as shown below.

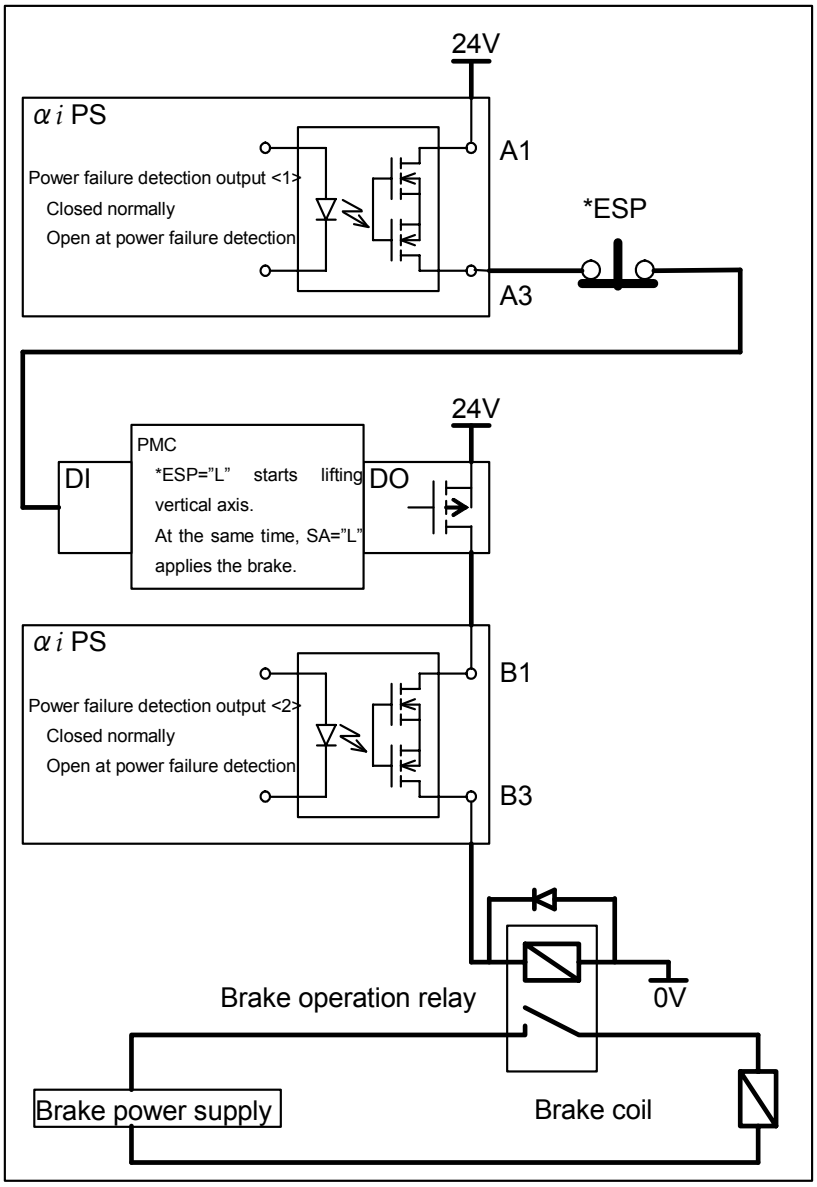

Refer to "FANUC AC SERVO MOTOR αi series Descriptions" (B-65262EN) for explanations about the specification of the brake operation relay contacts. Connect a surge suppression element (such as a diode) in parallel to the relay coil in order to suppress voltage surges that may occur when the relay is deenergized.

Time since the occurrence of a power failure until the brake operates

The “brake operation lag time” since the occurrence of a power failure is the sum of the “power failure detection delay time,” “relay release time,” and “brake response time.”

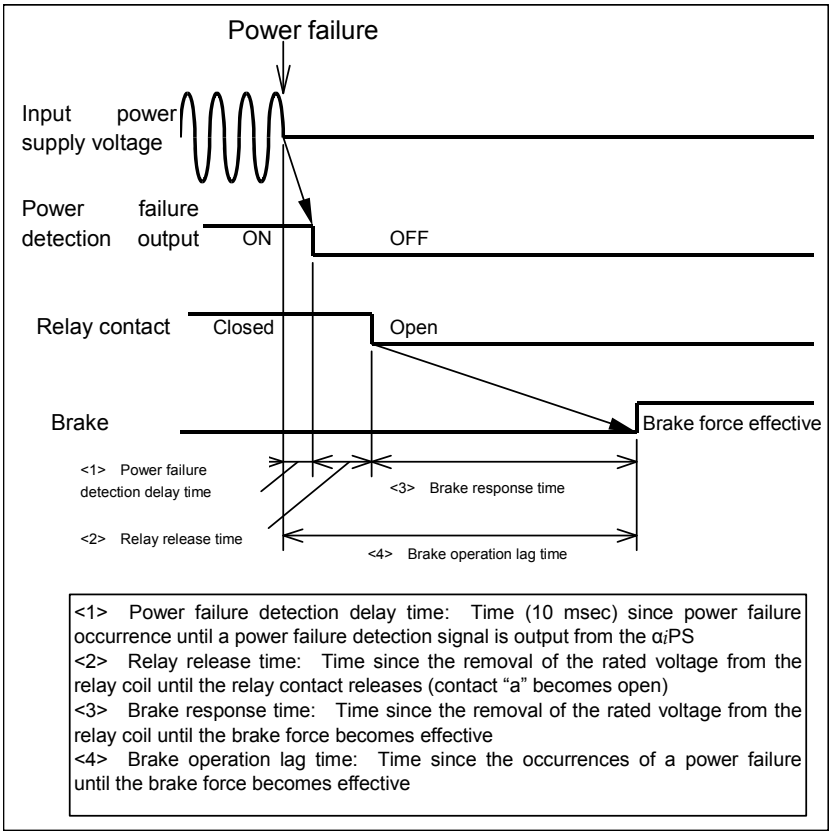

<1> Power failure detection delay time: Time (10 msec) since power failure occurrence until a power failure detection signal is output from the α*i*PS
<2> Relay release time: Time since the removal of the rated voltage from the relay coil until the relay contact releases (contact “a” becomes open)
<3> Brake response time: Time since the removal of the rated voltage from the relay coil until the brake force becomes effective
<4> Brake operation lag time: Time since the occurrences of a power failure until the brake force becomes effective

Relay release time

Select a relay with a short contact release time.
Example:

Omron G2R (coil voltage of 24 VDC, with a built-in diode): Release time of 20 msec or less

Brake response time

Listed below are the specifications of the built-in brake of each motor model.

Motor model	α*i* F1, α*i* F2 α*i*S2, α*i*S3 α*i*S2HV α*i*S3HV	α*i* F4, α*i* F8 α*i*S8, α*i*S12 β*i* S4, β*i* S 8 α*i* F4HV, α*i* F8HV α*i*S8HV, α*i*S12HV	α*i* F12- α*i* F40 α*i*S22 - α*i*S50 β*i* S 12 - β*i* S 30 α*i* F12HV, α*i* F20HV α*i*S22HV, α*i*S50HV	α*i*S100 α*i*S200 α*i*S100HV α*i*S200HV
Response time (max)	10msec	30msec	30msec	60msec

Brake operation lag time

Given below is an example of calculating the time that elapses since the occurrence of a power failure until the brake operates.

Conditions

<1> Power failure detection delay time → 10 msec
<2> Relay (Omron G2R) release time → 20 msec
<3> Brake (incorporated in the αi F8) response time → 30 msec

Result 10 msec + 20 msec + 30 msec = 60 msec

I.3.3 Method for Keeping Vertical Axis Motors Energized

The following conditions are required to keep a vertical axis motor energized after the occurrence of a power failure.

(1) The control power supply for the NC and amplifier remains normal.
(2) Parameters for enabling brake control are set.

Keeping control power on

Keeping a vertical axis motor energized even after the occurrence of a power failure requires keeping the control power for the NC and amplifier on for longer than the "brake operation lag time."

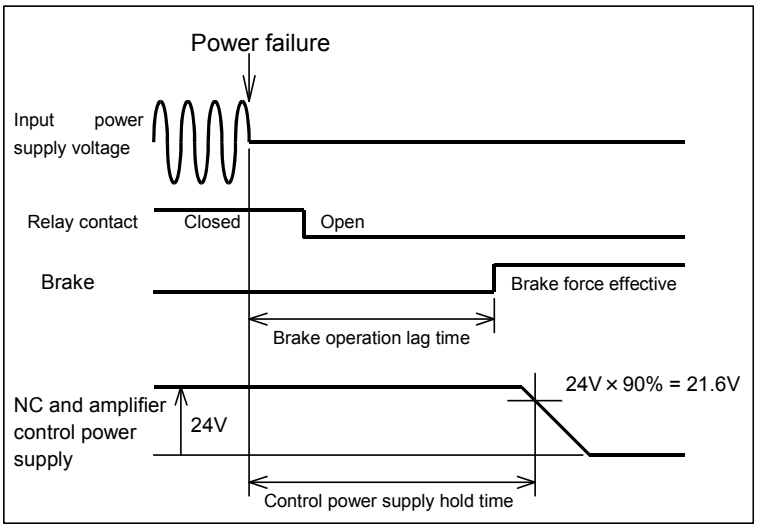

* See Subsection 5.2.2 for descriptions of the brake operation lag time.

(1) NC control power supply

Check the specification of an external power supply for supplying a control power voltage of 24 V.

The hold time of external power supplies varies depending on their load ratio (ratio of load current to power supply current rating). The lower the load ratio, the longer is the hold time after power failure occurrence. Using a power supply having a somewhat high current rating compared with the load current is effective in keeping the hold time long.

If a switching power supply with a 200 VAC single-phase input is used as a control power supply for the NC, use the same power supply voltage phase as for the control power inputs (pins 1 and 2 of connector CX1A) of the αi PS so that a drop in the 200 VAC control power supply input can be detected promptly.

(2) Amplifier control power supply

The hold time of the amplifier control power supply is determined according to how many SP and SV units are connected to the PS.

The rough hold time of the amplifier control power supply can be determined from the sum (N) of the constants n (Table 1) for each SP and SV connected to the PS according to Table 2.

Example: Assume the following SP and SV units are connected to one PS.

One αi SP 22 unit/one αi SV 360 unit/one αi SV 160 unit/one αi SV 80/80 unit

(According to Table 1)

n = 1 n = 1.5 n = 1 n = 1.5

N = 1 × 1 unit + 1.5 × 1 unit + 1 × 1 unit + 1.5 × 1 unit = 5

→ Hold time 40 msec (according to Table 2)

Table 1 Constant n for SP/SV

	Amplifier model	n
SP	αi SP 2.2 to 30, 5.5HV to 45HV (60 mm-wide/90 mm-wide/150 mm-wide type)	1
	αi SP 45, 55, 75HV, 100HV (300 mm-wide type)	1.5
SV (1 axis)	αi SV 20 to 160, 10HV to 80HV (60 mm-wide/90 mm-wide type)	1
	αi SV 360, 180HV (150 mm-wide type)	1.5
	αi SV 360HV (300 mm-wide type)	2
SV (2 axes)	All models	1.5
SV (3 axes)	All models	2

Table 2 Relationships between the amplifier control power supply hold time and N (sum of constants n)

Amplifier control power supply hold time	N
20 msec	8
30 msec	6.5
40 msec	5
50 msec	4
60 msec	3
70 msec	2

* The input voltage is 200 VAC.

Confirmation on the real machine

The amplifier control power supply hold time obtained using the expression given above is a mere rough estimate. The exact hold time of the amplifier and NC control power supplies must be confirmed on the real machine.

See Subsection 5.2.5 for explanations about a confirmation method.

Measure for an insufficient amplifier control power supply hold time

(1) If the hold time of the amplifier control power supply is insufficient (shorter than the brake operation lag time), it can be prolonged by supplying control power to some of the SP and SV units from the outside to reduce the load of the power supply in the PS. See Subsection I.3.6 for explanations about how to supply control power to SP or SV units from the outside.

(2) If the hold time of the NC and amplifier control power supplies is insufficient and it is difficult to add control power supplies or increase the capacity of existing control power supplies, connecting an UPS (uninterruptible power supply unit) can prolong the hold time.

Parameter setting

Set parameters for brake control.

(1) Brake control bit (BRKC): To be set to enable brake control.
(2) Brake control timer: To be set to a value not less than the brake operation lag time (100 msec or so).
(3) Emergency stop timer incorporated in the αi amplifier (ESPTM1, ESPTM0): To be set to a value longer than the brake control timer.

CNC	Parameter No.			
	BRKC	**Brake control timer**	**ESPTM1**	**ESPTM0**
FS15*i*	No.1883 #6	No.1976	No.1750 #6	No.1750 #5
FS16*i*, 18*i*, 21*i*, 30*i*, 31*i*, 32*i*, 0*i*	No.2005 #6	No.2083	No.2210 #6	No.2210 #5
Example setting	1	100	0	1

Refer to the "FANUC AC SERVO MOTOR αi series Parameter Manual" (B-65270EN) for detailed descriptions.

NOTE
If a multiaxis amplifier (such as a 2- or 3-axis amplifier) is used for vertical axes, set the above parameters for all axes on the multiaxis amplifier.

I.3.4 Cautions

(1) If a power failure occurs during heavy cutting, it is likely that it may be impossible to prevent a vertical axis from falling. This is because a DC link low voltage alarm occurs before the brake operates. Preventing vertical axes from falling in these situations requires connecting a power failure backup module to submodule C.

(2) Even if a measure is taken to prevent a vertical axis from falling, it falls through a distance corresponding to the backlash of the brake (for a ball screw pitch of 10 mm, up to 20 μm). If this distance cannot be ignored, the lifting function against gravity at emergency stop can be used to lift the vertical axis through that distance before a complete stop. Refer to the parameter manual (B-65270EN) for detailed descriptions of this function and parameter setting.

(3) If the connected drive power supply is a 200 VAC dynamic brake module DBM (A06B-6079-H401 or A06B-6069-H300), an UPS (uninterruptible power supply unit) having a 200 VAC output is needed to drive the DBM. Connect the servo amplifier connector CX1A with an UPS having the following specifications:

- Output voltage: 200 VAC single-phase sine wave
- Output frequency: 50 or 60 Hz
- Changeover time: No instantaneous break
- Output hold time: Brake operation lag time (see Subsection 4.2.2)
- Rated output (continuous rating): Number of DBM units × 22 [VA]
- Overload strength (20 msec): Number of DBM units × 220 [VA]

If this UPS is used also as an amplifier control power supply (input to the CX1A of the PS), it must have an output rating (continuous rating) of 700 VA. If a DBM (A06B-6079-H403) driven on 24 VDC is used and the 24 VDC power supply can remain on for the brake operation lag time or longer, no UPS is needed.

I.3.5 Confirming Effect

The following procedure can be used to check whether a measure taken to prevent a vertical axis from falling is effective.

(1) Keep the vertical axis at a halt, and write down its absolute coordinates.
(2) Turn off the machine's main circuit breaker to cause a power failure condition.
(3) Restart the machine, and check the absolute coordinates of the vertical axis to see whether it has fallen.

* The vertical axis will fall through a distance corresponding to the backlash of the brake (for a ball screw pitch of 10 mm, up to 20 μm).

[Measure for a vertical axis falling when the circuit breaker is turned off]

If a vertical axis falls when the circuit breaker is turned off, observe the waveforms described below to find causes.

(1) Brake coil voltage → Observe the voltage across the brake coil.
(2) Amplifier control power supply voltage → Observe the voltages at pins A1 (24 V) and A2 (0 V) of connector CXA2B of the last amplifier.
(3) Control power supply voltage supplied to the NC → Observe the output voltage of the 24 V power supply for the NC.
(4) Input power source voltage → Observe the voltage of the input AC power source, using an insulated probe.

If the control power of the amplifier or NC drops before the brake operates, take an action stated below and see how it works.

- Exchange the power failure detection relay for operating the brake coil (have another look at the specification of the release time).
- Prolong the hold time of the control power supplies by increasing their capacity (reducing their load ratio).

Shown below are examples of waveforms observed when a measure taken to prevent a vertical axis from falling works normally.

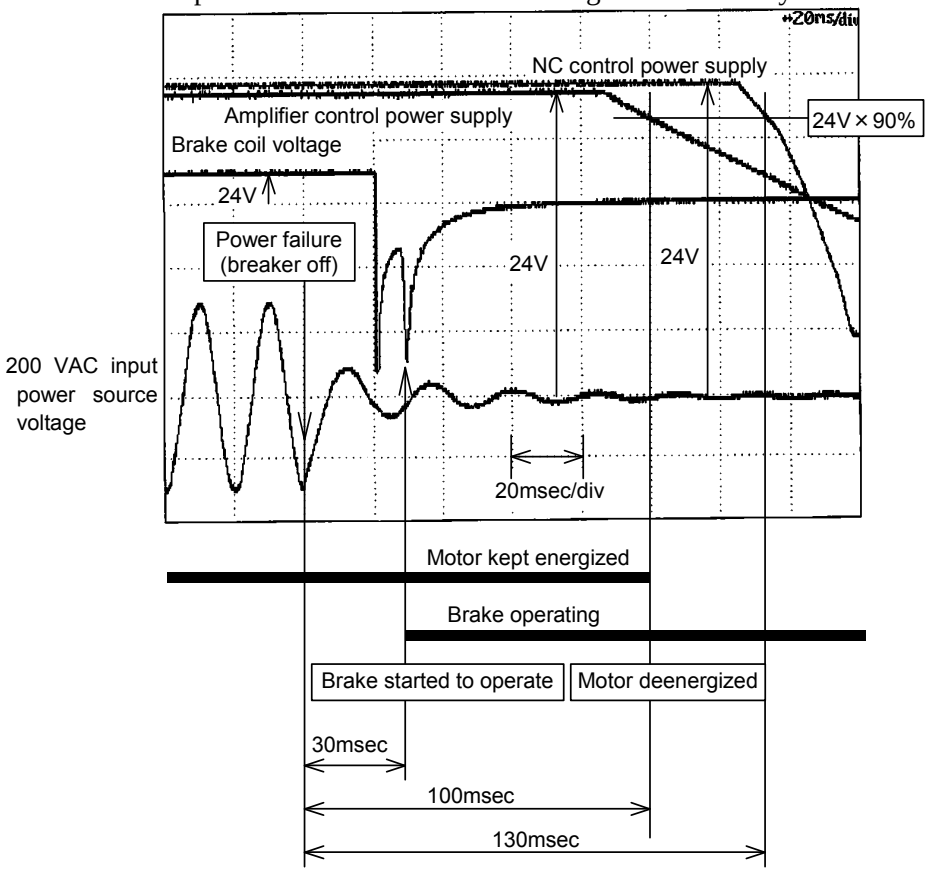

I.3.6 Method for Supplying External Power to the Amplifier

Connection diagram

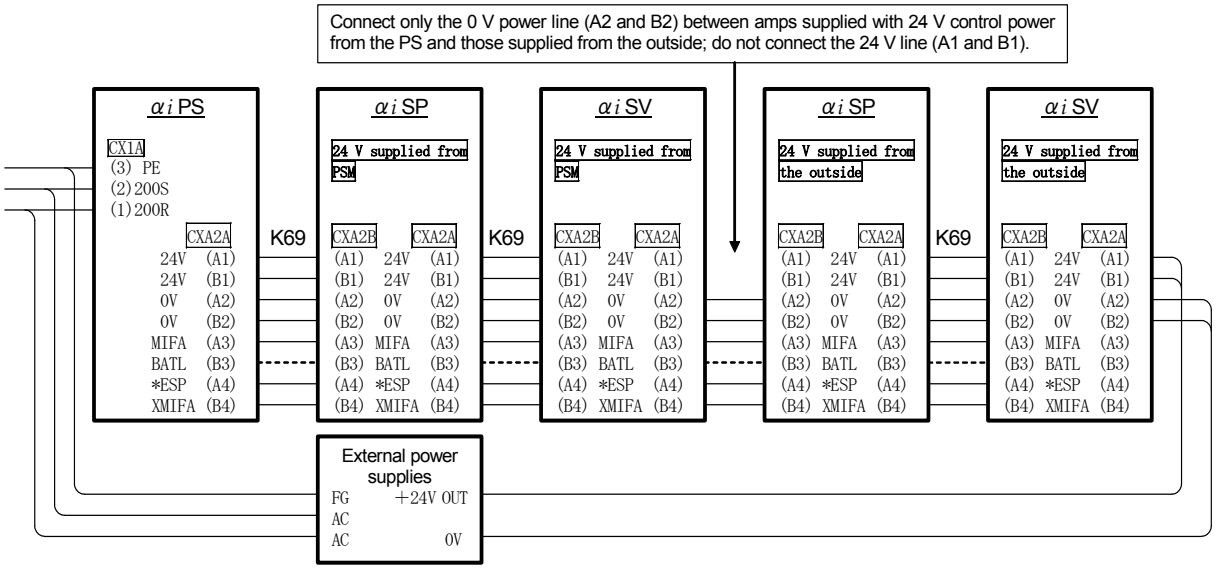

Power supply capacity

(1) αi SV (3-axes), αi SV 360, 180HV (150 mm-wide SV), αi SP 45, 55, 75HV, 100HV (300 mm-wide SP) → 1.5A
(2) αi SV 360HV (300 mm-wide SV) → 2A
(3) Others → 1A

Timing to turn off power supplies

Configure connections of the PS, external power supplies A, and B (see the figure below) so that they will be turned on simultaneously and their output voltages will satisfy the timing requirements shown on the following timing chart. Generally, turning on these power supplies simultaneously would satisfy the timing requirements. If a timing requirement is not satisfied, however, attach a delay timer to the power line in order to satisfy it.

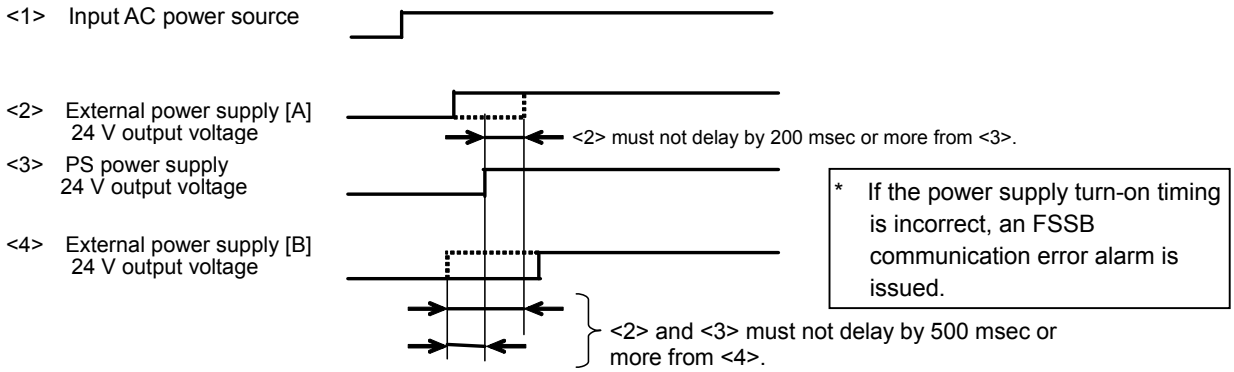

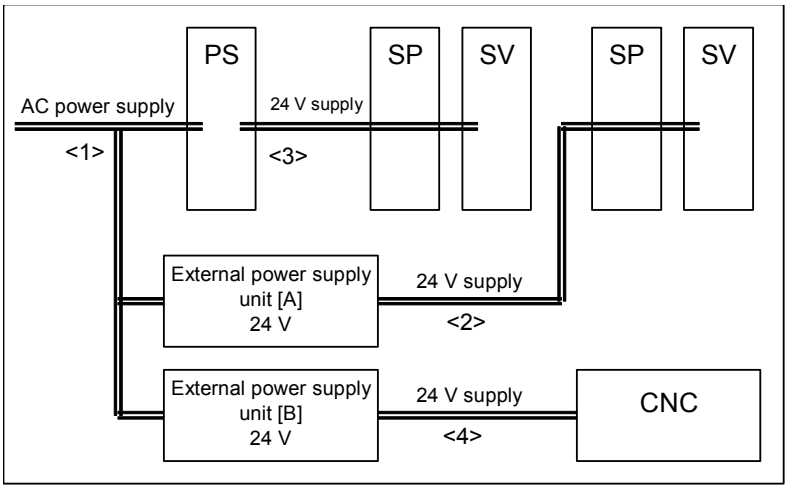

⚠ CAUTION

1 If an external power supply (24 V) is shared between a servo amplifier and another unit, any fluctuation in the load current of the non-servo amplifier unit affects the 24 V voltage adversely, leading to a possible servo amplifier or CNC alarm.
2 Keep voltage fluctuations of the external power supply (24 V) within a tolerable range (24 V ±10%) any time (including momentarily). No 24 V power can be supplied to the PS from the outside. Be sure to supply 200 VAC to the PS (through connector CX1A).

I.4 USE IN COMBINATION WITH THE DUAL CHECK SAFETY FUNCTION

When using the following functions at the same time, add a relay between A1 and A3 of the connector (CX37) of the αiPS.

- When using the dual check safety function
- When using αiPS power failure detection output for the function of preventing vertical axes from falling at power failure

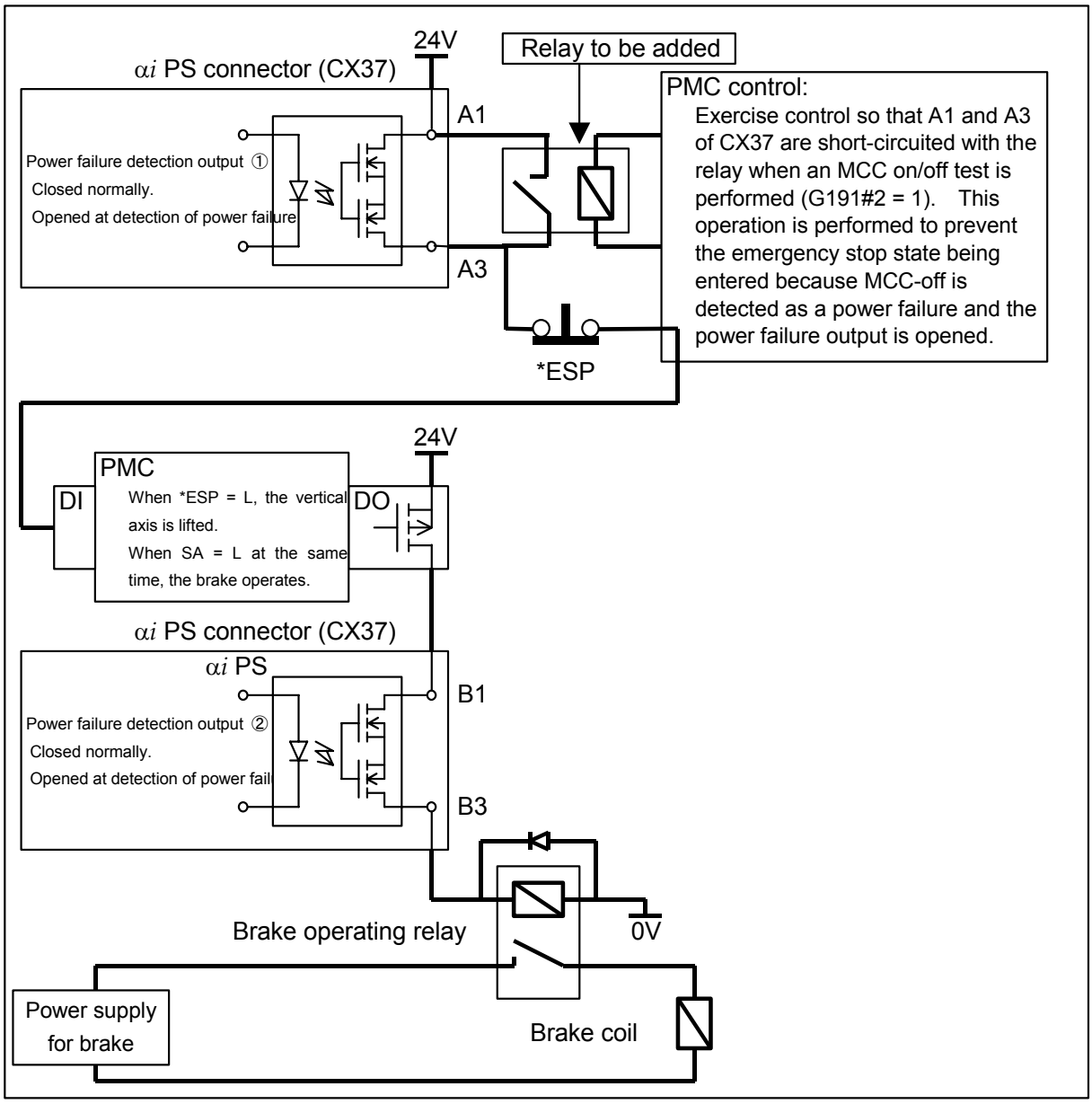

J SENSOR (OLD SPECIFICATIONS)

Appendix J, "SENSOR (OLD SPECIFICATIONS)," consists of the following sections:

J.1 SENSOR FOR THE SYNCHRONOUS BUILT-IN SERVO MOTOR AND SEPARATE SENSOR 483
J.2 SENSOR FOR THE SPINDLE.....498

J.1 SENSOR FOR THE SYNCHRONOUS BUILT-IN SERVO MOTOR AND SEPARATE SENSOR

J.1.1 Absolute αiCZ Sensor (Serial Output, A860-2142-T***)

The absolute αiCZ sensor is used as an angular displacement sensor for the synchronous built-in servo motor DiS series or as a separate sensor. For this sensor, the FANUC serial interface is used. This sensor can be directly connected to the αi series servo amplifier or the separate sensor interface unit.

Names and specification numbers

Name	Specification number	Resolution [rotation]	Repetitive positioning precision (Typ.)	Absolute precision (Typ.)	Remarks				
					Number of teeth	Maximum speed [min^{-1}]	Sensor ring		Function
							Inner diameter	Outer diameter	
Absolute αiCZ sensor 512S	A860-2142-T411 (Cable length: 1.2 m) A860-2142-T412 (Cable length: 0.4 m)	1/3,600,000	±1″	±7″	512	600	φ82	φ102.8	Absolute
Absolute αiCZ sensor 768S	A860-2142-T511 (Cable length: 1.2 m) A860-2142-T512 (Cable length: 0.4 m)	1/3,600,000	±1″	±5″	768	400	φ125	φ154	Absolute
Absolute αiCZ sensor 1024S	A860-2142-T611 (Cable length: 1.2 m) A860-2142-T612 (Cable length: 0.4 m)	1/3,600,000	±1″	±3.5″	1024	300	φ160	φ205.2	Absolute

NOTE
When the absolute αiCZ sensor 768S is used as a position sensor for the synchronous built-in servo motor DiS, the sensor can be used only for a application of finite rotations (10 rotations or less in total).

Absolute maximum ratings

Item	Specification
Power supply voltage	-0.5 V to +6.0 V
Operating temperature range	0°C to +50°C
Humidity	95%RH or less

Electrical specifications

Item	Specification
Power supply voltage	5 V ±5%
Current consumption	250 mA or less
Current consumption at battery backup time	400 μA (Typ.)

Dimensions

Absolute αiCZ Sensor 512S

A860-2142-T411(cable length: 1.2m)

A860-2142-T412(cable length: 0.4m)

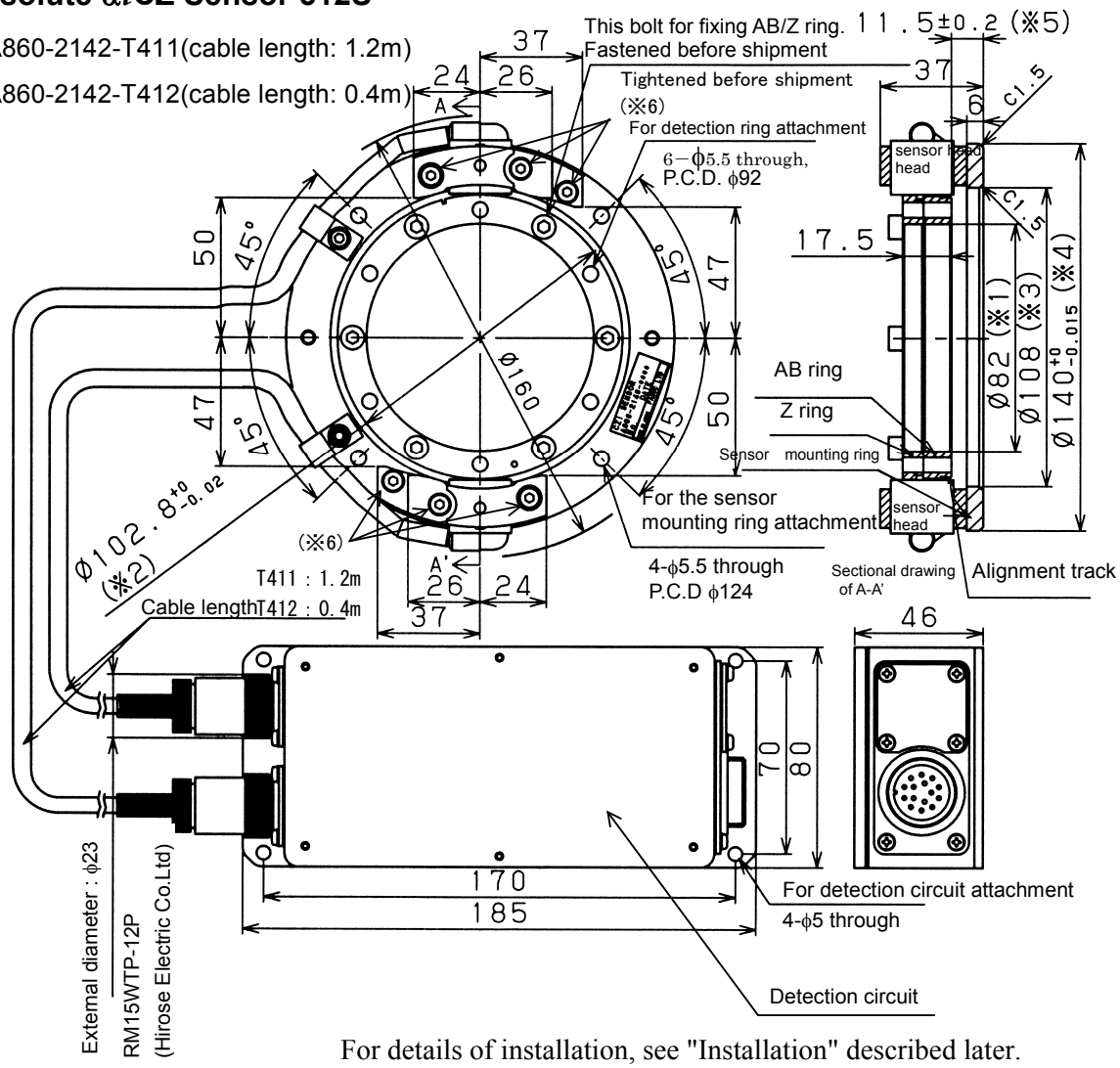

For details of installation, see "Installation" described later.

NOTE
- The inner diameter(*1) of the sensor ring is set with a plus tolerance. (*2) indicates the outer diameter of the tooth surface of the sensor ring.
- The inner diameter(*3) of the sensor mounting ring is set with a plus tolerance. (*4) indicates the outer diameter of the sensor mounting ring.
- (*5) indicates the distance from the bottom of the sensor mounting ring to the bottom of the sensor ring.
- The sensor head cannot be adjusted mechanically. So, do not loosen the screws marked (*6).
- Use the sensor at a temperature not higher than 50°C.
- Because the absolute αiCZ sensor is adjusted as a combination of the sensor ring, sensor, and sensor circuit in advance, they must be used as a set.
- The sensor is a precision part. Use special care in handling. Particularly, do not apply external force to the sensor element.
- The sensor is an electronic part. To prevent chips, oil, water, and other harmful materials from being attached to the sensor, take dust-proof and water-proof measures on the machine side.
- The waterproofness of the sensor circuit box is equivalent to IP55. However, if the sensor circuit box is continuously exposed to coolant, for example, the sensor can fail. Provide highest-level water protection to prevent the sensor circuit box from being exposed to coolant or the like.
- Ensure that no vibration greater than 1 G is applied to the sensor circuit box.
- For easy maintenance, mount the sensor at a position where it can be replaced easily.
- Ground the sensor circuit box. The bottom of the sensor circuit box is not painted. So, the sensor circuit box can be grounded only by screwing.

Absolute αiCZ sensor 768S

A860-2142-T511 (Cable length 1.2 m)
A860-2142-T512 (Cable length 0.4 m)

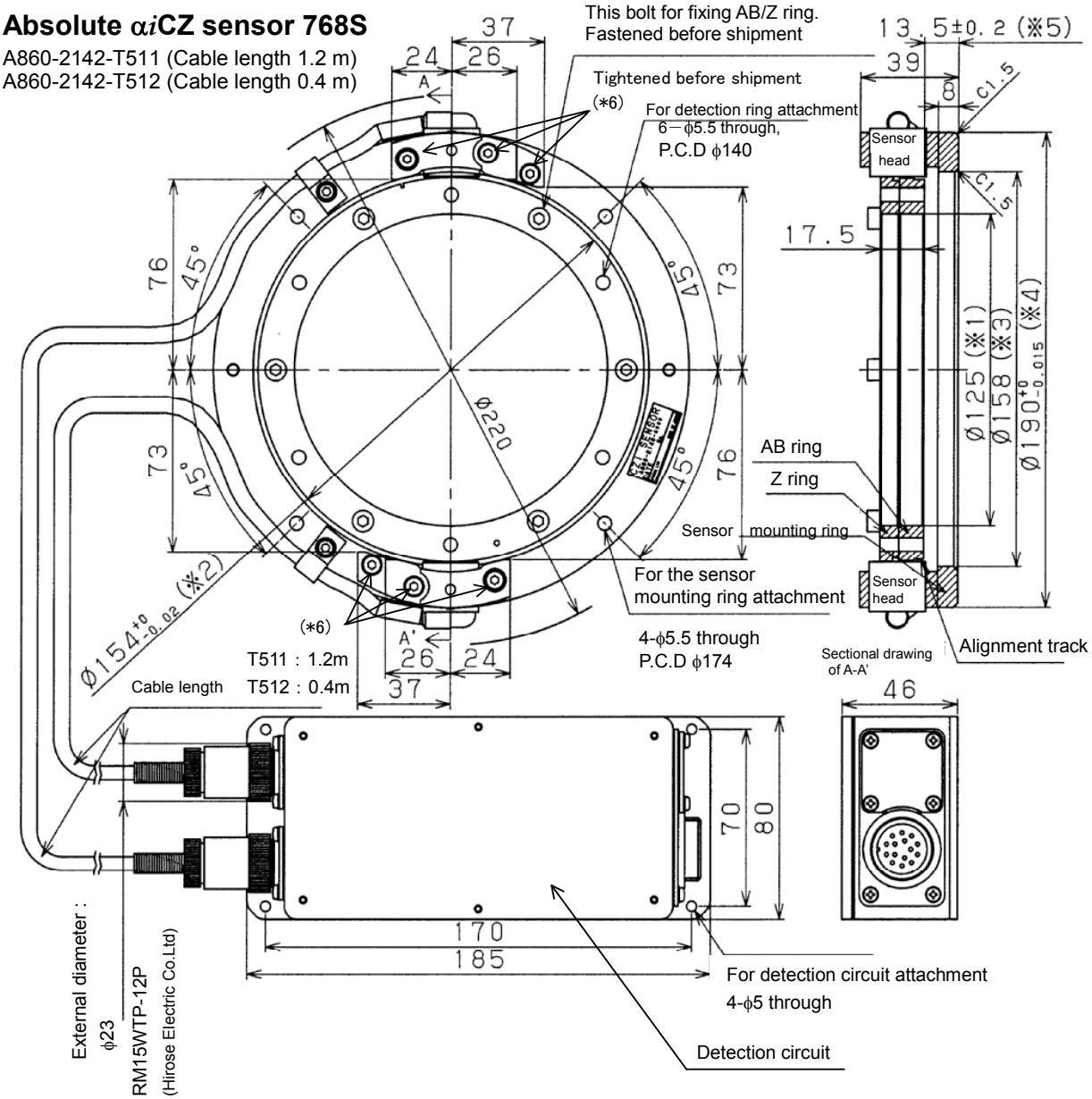

For details of installation, see "Installation" described later.

NOTE
- The inner diameter(*1) of the sensor ring is set with a plus tolerance. (*2) indicates the outer diameter of the tooth surface of the sensor ring.
- The inner diameter(*3) of the sensor mounting ring is set with a plus tolerance. (*4) indicates the outer diameter of the sensor mounting ring.
- (*5) indicates the distance from the bottom of the sensor mounting ring to the bottom of the sensor ring.
- The sensor head cannot be adjusted mechanically. So, do not loosen the screws marked (*6).
- Use the sensor at a temperature not higher than 50°C.
- Because the absolute αiCZ sensor is adjusted as a combination of the sensor ring, sensor, and sensor circuit in advance, they must be used as a set.
- The sensor is a precision part. Use special care in handling. Particularly, do not apply external force to the sensor element.
- The sensor is an electronic part. To prevent chips, oil, water, and other harmful materials from being attached to the sensor, take dust-proof and water-proof measures on the machine side.
- The waterproofness of the sensor circuit box is equivalent to IP55. However, if the sensor circuit box is continuously exposed to coolant, for example, the sensor can fail. Provide highest-level water protection to prevent the sensor circuit box from being exposed to coolant or the like.
- Ensure that no vibration greater than 1 G is applied to the sensor circuit box.
- For easy maintenance, mount the sensor at a position where it can be replaced easily.
- Ground the sensor circuit box. The bottom of the sensor circuit box is not painted. So, the sensor circuit box can be grounded only by screwing.

Absolute αiCZ sensor 1024S

A860-2142-T611 (Cable length 1.2 m)
A860-2142-T612 (Cable length 0.4 m)

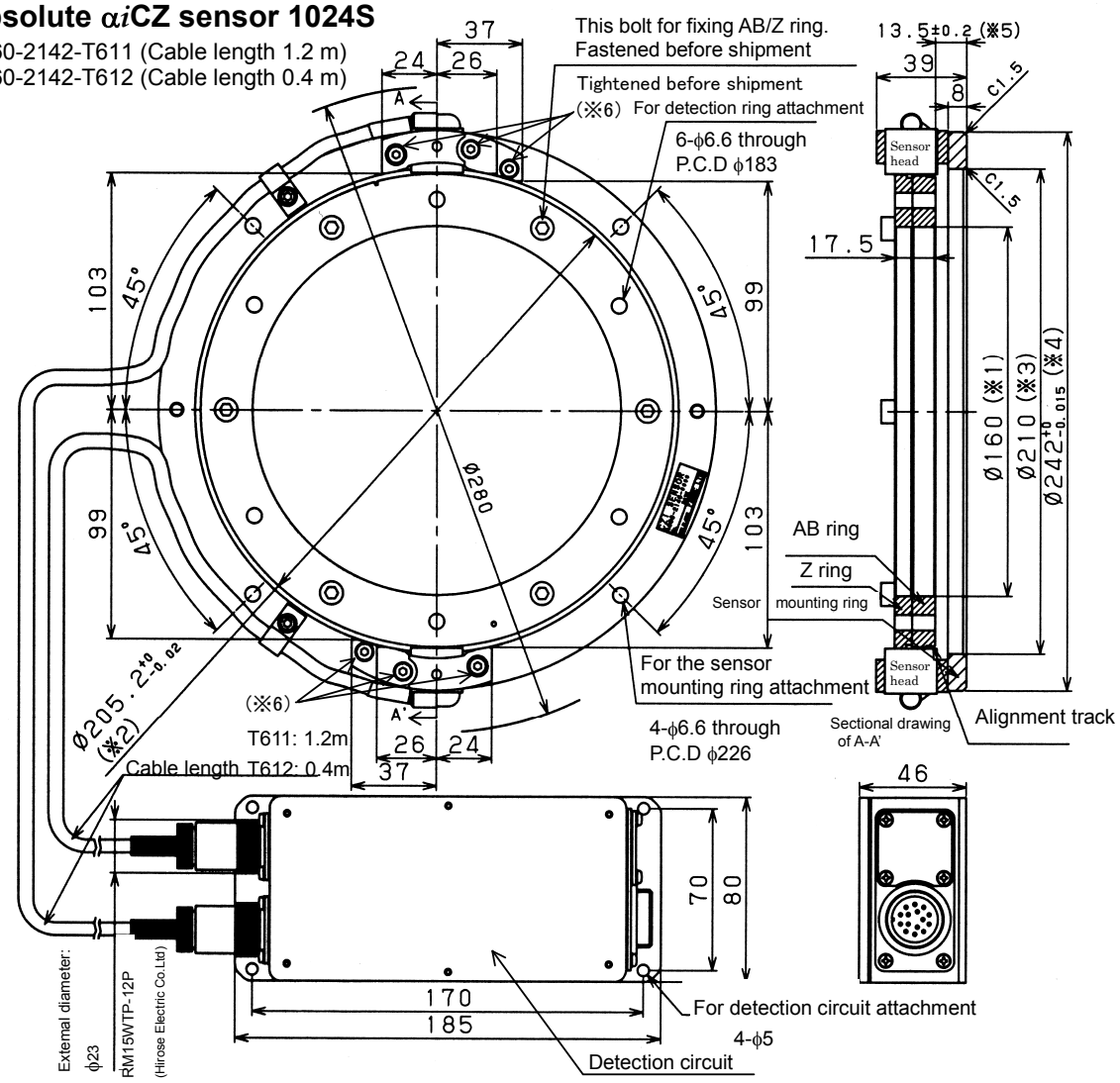

For details of installation, see "Installation" described later.

NOTE

- The inner diameter(*1) of the sensor ring is set with a plus tolerance. (*2) indicates the outer diameter of the tooth surface of the sensor ring.
- The inner diameter(*3) of the sensor mounting ring is set with a plus tolerance. (*4) indicates the outer diameter of the sensor mounting ring.
- (*5) indicates the distance from the bottom of the sensor mounting ring to the bottom of the sensor ring.
- The sensor head cannot be adjusted mechanically. So, do not loosen the screws marked (*6).
- Use the sensor at a temperature not higher than 50°C.
- Because the absolute αiCZ sensor is adjusted as a combination of the sensor ring, sensor, and sensor circuit in advance, they must be used as a set.
- The sensor is a precision part. Use special care in handling. Particularly, do not apply external force to the sensor element.
- The sensor is an electronic part. To prevent chips, oil, water, and other harmful materials from being attached to the sensor, take dust-proof and water-proof measures on the machine side.
- The waterproofness of the sensor circuit box is equivalent to IP55. However, if the sensor circuit box is continuously exposed to coolant, for example, the sensor can fail. Provide highest-level water protection to prevent the sensor circuit box from being exposed to coolant or the like.
- Ensure that no vibration greater than 1 G is applied to the sensor circuit box.
- For easy maintenance, mount the sensor at a position where it can be replaced easily.
- Ground the sensor circuit box. The bottom of the sensor circuit box is not painted. So, the sensor circuit box can be grounded only by screwing.

Installation

Installing the sensor ring

Install the flange on the shaft side and screw it in the axis direction by using the sensor ring mounting hole. In assembly, perform centering using the centering track so that the swing from the center of rotation is 10 μm or less.

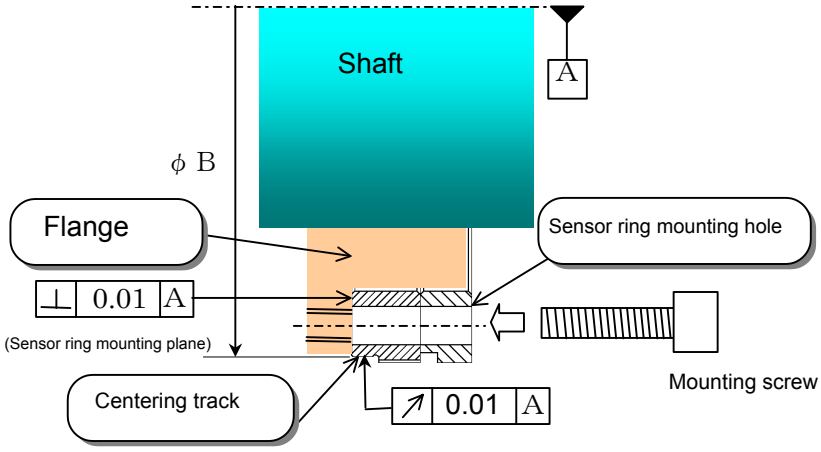

Specification	Outer diameter of centering track (ϕB)	Positions of sensor ring mounting holes	Mounting screw	Recommended tightening torque (Nm)
A860-2142-T411 A860-2142-T412	ϕ101	6-ϕ5.5 through, equally spaced on ϕ92 circumference	M5	2.4 to 3.4
A860-2142-T511 A860-2142-T512	ϕ152.2	6-ϕ5.5 through, equally spaced on ϕ140 circumference	M5	2.4 to 3.4
A860-2142-T611 A860-2142-T612	ϕ203.4	6-ϕ6.6 through, equally spaced on ϕ183 circumference	M6	4.1 to 5.8

NOTE

- For centering, the outer diameter of the flange must be designed so that there is a gap of about 0.1 mm between the flange and the inner surface of the sensor ring.
- Secure the sensor ring on the end face with screws (avoid heat shrink fitting to mount the sensor ring).
- The sensor ring consists of a phase Z ring and phase A/B ring, which are fastened together by using screws in advance. Never detach these screws. Spot facing is not provided. So, at the time of machine design, be careful not to cause interference with the screw heads.
- Centering must be performed with the centering track (the outer surface of the phase Z ring and the teeth pitch circle are not coaxial). When performing centering, use a tool such as a plastic hammer not to damage the gear teeth.
- Magnetic matter attached to gear teeth can lead to a detection error. After centering is completed, remove such foreign matter by air blowing.

Installing the sensor mounting ring

When installing the sensor mounting ring, provide a socket on the machine side, and fit the sensor mounting ring into the socket. (The dimensions of the socket on the machine side must satisfy the accuracy indicated in the table below. Otherwise, detection precision may deteriorate.) When fastening the mounting ring with the screws, press the mounting ring against the socket from the CN1 sensor side as shown in the figure below. After the installation, check that the gap between the sensor ring and sensor is 0.08 mm or more by using a thickness gage.

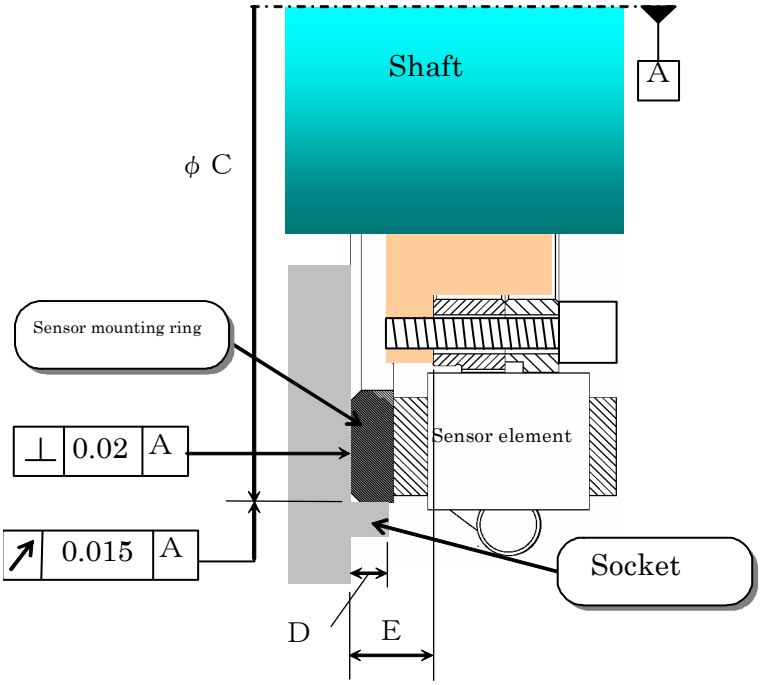

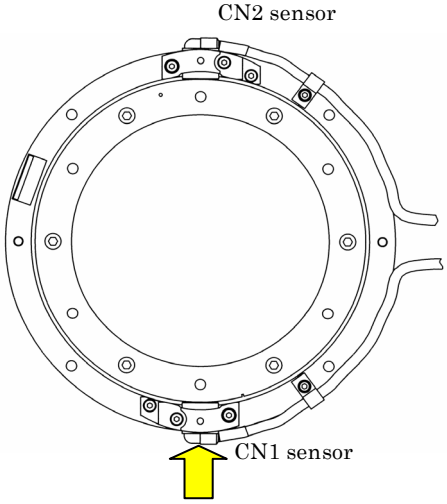

Fasten the sensor mounting ring while pressing it in the arrow direction.

Specification	Outer diameter of sensor mounting ring	Inner diameter of socket (ϕC)	Socket height (D)	Distance between bottom of sensor mounting ring and bottom of sensor ring (E)
A860-2142-T411 A860-2142-T412	$\phi 140^{+0}_{-0.015}$	$\phi 140^{+0.015}_{-0}$	5.5 or less	11.5±0.2
A860-2142-T511 A860-2142-T512	$\phi 190^{+0}_{-0.015}$	$\phi 190^{+0.015}_{-0}$	7.5 or less	13.5±0.2
A860-2142-T611 A860-2142-T612	$\phi 242^{+0}_{-0.015}$	$\phi 242^{+0.015}_{-0}$	7.5 or less	13.5±0.2

NOTE
- Provide a sock on the machine side where possible, and fit the sensor mounting ring into the socket. Avoid making centering adjustments by tapping the outer surface of the sensor mounting ring.

When checking the signal waveforms

When checking the signal waveforms, see the description below. (The signals need not be adjusted.) Supply power to the 0 V and 5 V pins. The Lissajous figure of phase A/B output signal is a complete circle.

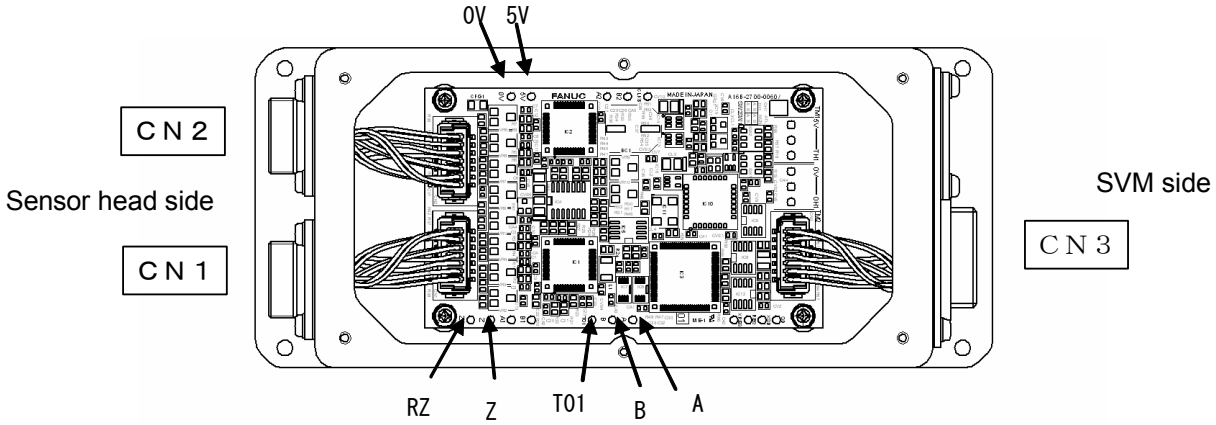

Phase A/B and phase Z signal waveforms (measured on the sensor circuit check pins at room temperature and 500 min^{-1})

Signal name	Check pin	Output amplitude	Offset
Phase A Phase B	A (Relative to T01) B (Relative to T01)	3200 ±300 mVp-p	±50 mV
Phase Z	Z (Relative to RZ)	660 to 1,650 mVp-p	100 to 250 mV

For connector pins, see "Details of cable (K89) for connection with the αiSP series" described later.

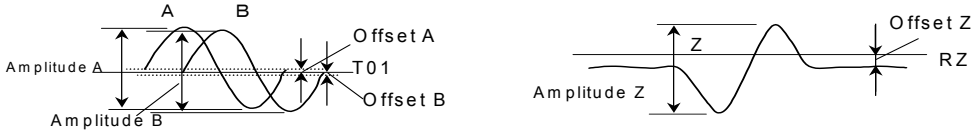

NOTE
- Adjustments have been made for the sensor, sensor circuit, and sensor ring at the same time. Therefore, use them as a set. The variable resistor on the printed circuit board of the sensor circuit is also adjusted in advance. So, do not readjust the variable resistor. Furthermore, the sensors cannot be adjusted mechanically. So, do not loosen the screws fastening the CN1 and CN2 sensors.

The connectors on the sensor side are labeled "CN1" (in black) and "CN2" (in blue). Make connections according to the figure above.

Rotation direction of the absolute α*i*CZ sensor

When the sensor is viewed from the top as shown in the following figure, clockwise rotation of the sensor ring is referred to as forward rotation:

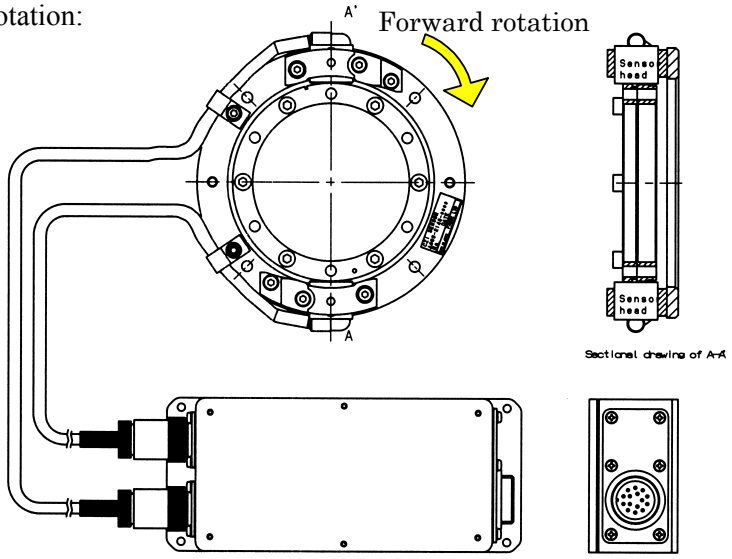

Check the rotation directions of the encoder and motor according to "Synchronous Servo Built-in Motor D*i*S Series Descriptions (B-65332EN)." If their rotation directions are opposite to each other, connect U-W-V of the motor to U-V-W of the amplifier.

Notes

Do not detach the connectors of the absolute α*i*CZ sensor heads from the sensor circuit. If the connectors are detached, the reference position may be displaced. In such a case, be sure to perform reference position return operation (magnetic pole position detection and reference position return operation when using the sensor with the synchronous built-in servo motor).

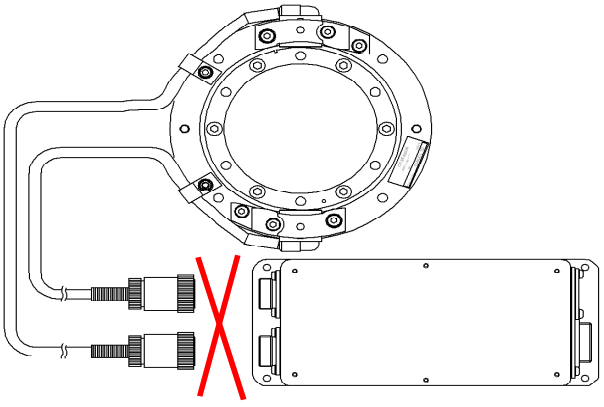

When the absolute α*i*CZ sensor is used as a sensor with the synchronous built-in servo motor, the magnetic pole position detection function (option) is needed. For the magnetic pole position detection function, refer to the specifications (A-77769).

Extending the sensor cables

The sensor cable from each sensor head to the sensor circuit can be extended until the total length becomes 5.2 m.

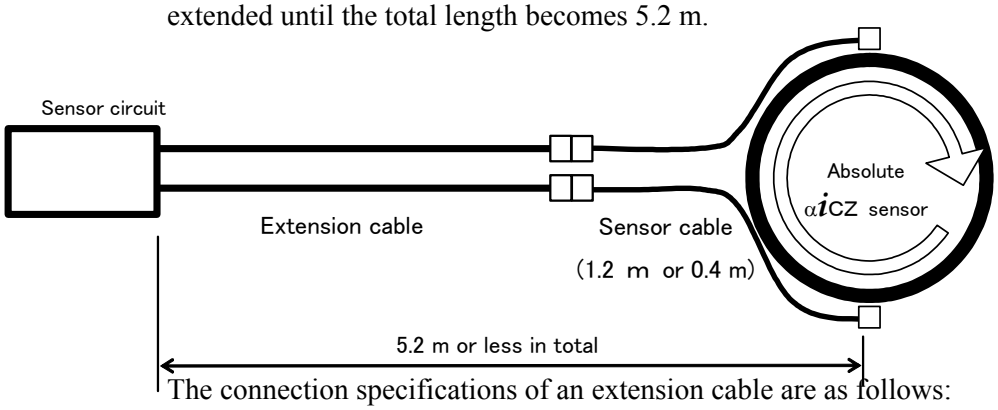

The connection specifications of an extension cable are as follows:

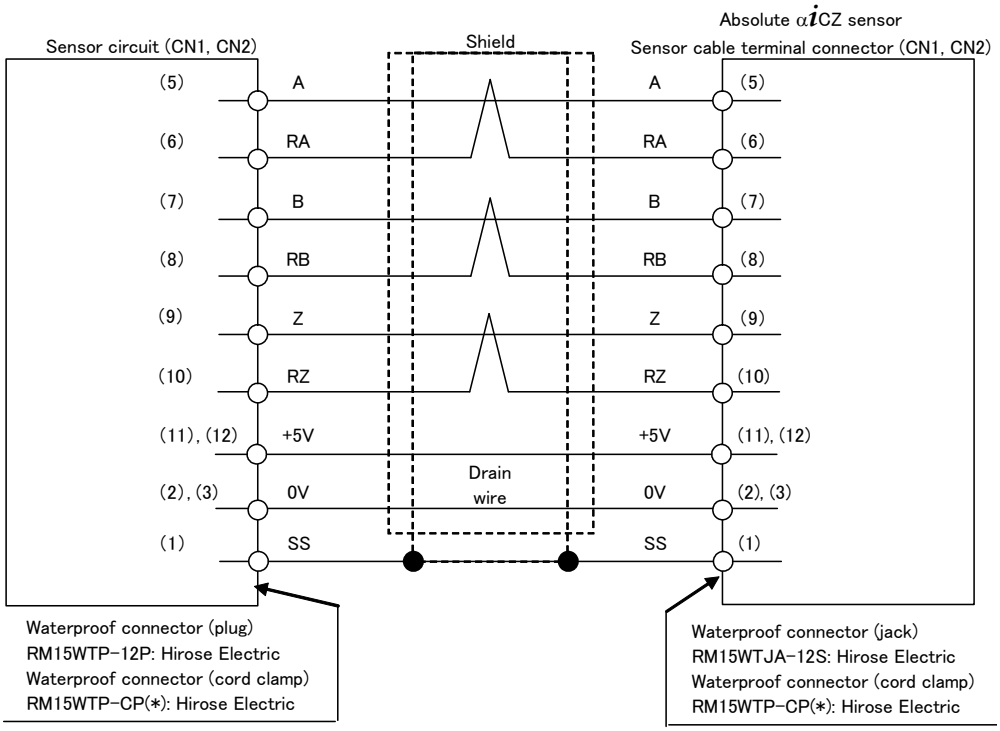

* When ordering the cord clamp marked with *, specify the outer diameter of the cable sheath.

* Z and RZ are not output from the sensor head on the CN2 side but may be connected.

Signal name	
5V, 0V	0.5 mm^2 × 2
A, RA, B, RB, Z, RZ	0.2 mm^2 or more Twisted pair
Drain wire	0.15 mm^2 or more

Recommended cable A66L-0001-0317

Parameter setting

With the absolute α*i*CZ sensor, the number of feedback pulses per rotation varies, depending on the number of teeth. Make parameter settings according the absolute α*i*CZ sensor used.

When using the absolute α*i*CZ sensor as a sensor for the synchronous built-in servo motor, perform magnetic pole position detection by using the magnetic pole position detection function (option). For the magnetic pole position detection function, refer to the specifications (A-77769).

[When using the absolute α*i*CZ sensor as a position sensor for the synchronous built-in servo motor D*i*S]

(Supported servo software)

The supported servo software depends on the specifications of the NC and sensor used (see the table below). For AMR offset setting, the magnetic pole position detection function needs to be used. The absolute αiCZ sensor 768S can be used only for an application of finite rotations.

NC / Sensor specification	Series-0*i*	Series-15*i*,16*i*,18*i*,21*i*	Series-30*i*,31*i*,32*i*
Absolute α*i*CZ sensor 512S		Series 90B1/Edition A (01) or later	Series 90D0/Edition A (01) or later Series 90E0/Edition A (01) or later
Absolute α*i*CZ sensor 768S		**Applicable only to finite rotations (less than 10 rotations in total)** Series 90B1/Edition C (03) or later	**Applicable only to finite rotations (less than 10 rotations in total)** Series 90D0/Edition J (10) or later Series 90E0/Edition J (10) or later
Absolute α*i*CZ sensor 1024S		Series 90B1/Edition A (01) or later	Series 90D0/Edition A (01) or later Series 90E0/Edition A (01) or later

(Absolute α*i*CZ sensor 1024S)

Make parameter settings as a 1,000,000-pulse coder as with the α*i* pulse coder.

F·FG	(Number of position pulses needed per motor rotation)/1,000,000
Number of velocity pulses	8192
Number of position pulses	12500
AMR	Set (number of poles)/2 in binary.
Reference counter	Number of position pulses needed per motor rotation or that number divided by an integer

Example of setting: 88-pole DD motor, rotation axis, gear ratio of 1:1, 1/1000° detection

F·FG = 360000/1,000,000 = 36/100
Number of velocity pulses = 8192
Number of position pulses = 12500
AMR = 00101100 (44)
Reference counter = 360000 (or this number divided by an integer)

(Absolute αiCZ sensor 768S)

Make parameter settings as a 750,000-pulse coder as described below. Note that parameter settings different from those for 512S and 1024S need to be made.

The absolute αiCZ sensor 768S can be used only for an application of finite rotations (less than 10 rotations in total).

F·FG	(Number of position pulses needed per motor rotation)/750,000
Number of velocity pulses	6144
Number of position pulses	9375
Bit 0 of No. 2608 (FS15i)/Bit 0 of No. 2220 (FS16i, 30i) = 1	
AMR	00000000
AMR conversion coefficient 1	No. 1705 (FS15i)/No. 2112 (FS16i, 30i) = 768
AMR conversion coefficient 2	No. 1768 (FS15i)/No. 2138 (FS16i, 30i) = (Number of poles)/2
Reference counter	Number of pulses per 120° or that number divided by an integer

Example of setting: 88-pole DD motor, rotation axis, gear ratio of 1:1, 1/1000° detection

F·FG = 360000/750,000 = 36/75
Number of velocity pulses = 6144
Number of position pulses = 9375
Bit 0 of No. 2608 or bit 0 of No. 2220 = 1
AMR = 00000000
AMR conversion coefficient 1 (No. 1705 or No. 2112) = 768
AMR conversion coefficient 2 (No. 1768 or No. 2138) = 44
(= 88/2)
Reference counter = 120000 (or this number divided by an integer)

(Absolute αiCZ sensor 512S)

Make parameter settings as a 500,000-pulse coder as described below.

F·FG	(Number of position pulses needed per motor rotation)/500,000
Number of velocity pulses	4096
Number of position pulses	6250
AMR	Set the number of poles in binary.
Reference counter	Number of position pulses needed per motor rotation or that number divided by an integer

Example of setting: 88-pole DD motor, rotation axis, gear ratio of 1:1, 1/1000° detection

F·FG = 360000/500,000 = 36/50
Number of velocity pulses = 4096
Number of position pulses = 6250
AMR = 01011000 (88)
Reference counter = 360000 (or this number divided by an integer)

[When using the absolute αiCZ sensor as a separate sensor]

(Supported servo software)

No version restriction is imposed. Any version of servo software may be used.

(Absolute αiCZ sensor 1024S)

Make parameter settings as with a FANUC rotary encoder of serial output type.

F·FG	(Number of position pulses needed per sensor rotation)/1,000,000
Number of position pulses	12500 × (gear reduction ratio from motor to table)
Reference counter	Number of position pulses needed per sensor rotation or that number divided by an integer

Example of setting: Rotation axis, gear ratio of 1:1, 1/1000° detection
F·FG = 360000/1000000 = 36/100
Number of position pulses = 12500
Reference counter = 360000 (or this number divided by an integer)

(Absolute αiCZ sensor 768S)

Make parameter settings as a rotary encoder of 750,000 pulses per rotation as described below.
* Note that parameter settings different from those for 512S and 1024S are made.

F·FG	(Number of position pulses needed per sensor rotation)/750,000
Number of position pulses	9375 × (gear reduction ratio from motor to table)
Reference counter	Number of pulses per 120° or that number divided by an integer

Example of setting: Rotation axis, gear ratio of 1:1, 1/1000° detection
F·FG = 360000/750000 = 36／75
Number of position pulses = 9375
Reference counter = 120000 (or this number divided by an integer)

(Absolute αiCZ sensor 512S)

Make parameter settings as a rotary encoder of 500,000 pulses per rotation as described below.

F·FG	(Number of position pulses needed per sensor rotation)/500,000
Number of position pulses	6250 × (gear reduction ratio from motor to table)
Reference counter	Number of position pulses needed per sensor rotation or that number divided by an integer

Example of setting: Rotation axis, gear ratio of 1:1, 1/1000° detection
F·FG = 360000/500000 = 36/50
Number of position pulses = 6250
Reference counter = 360000 (or this number divided by an integer)

J.2 SENSOR FOR THE SPINDLE

J.2.1 αiBZ Sensor (Conventional Dimensions, A860-2120-T***)

Two types of αiBZ sensors are available: αiBZ sensors of the conventional dimensions (A860-2120-T***) and compact-size αiBZ sensors (A860-2150-T*** and A860-2155-T***). The αiBZ sensors of the conventional dimensions and compact-size αiBZ sensors are not compatible with each other from the viewpoint of installation. If the number of sensor ring teeth of an αiBZ sensor of the conventional dimensions is the same as that of a compact-size αiBZ sensor, the sensor rings of the two sensors have the same inner and outer diameters. The αiBZ sensors of the conventional dimensions and compact-size αiBZ sensors have the same output signal specifications. So, when a sensor of one type is replaced with a sensor of the other type, no parameter modification is needed.

Names and specification numbers

Name	Specification number	Remarks			
		Number of teeth	Maximum speed	Sensor ring	
				Inner diameter	Outer diameter
αiBZ sensor 128	A860-2120-T201	128	20,000min^{-1}	φ40	φ52
αiBZ sensor 128H	A860-2120-T211		70,000min^{-1}		
αiBZ sensor 256	A860-2120-T401	256	15,000min^{-1}	φ82	φ103.2
αiBZ sensor 256H	A860-2120-T411		30,000min^{-1}		
αiBZ sensor 384	A860-2120-T511	384	15,000min^{-1}	φ125	φ154.4
αiBZ sensor 512	A860-2120-T611	512	10,000min^{-1}	φ160	φ205.6

Absolute maximum ratings

Item	Specification
Power supply voltage	-0.5 V to +7.0 V
Operating temperature range	0°C to +80°C
Humidity	95%RH or less

Electrical specifications

Item			Specification
Power supply voltage			5 V ±5%
Current consumption			0.05 A
Output signal	VA, VB	αiBZ sensor 128/128H	128λ/rotation
		αiBZ sensor 256/256H	256λ/rotation
		αiBZ sensor 384	384λ/rotation
		αiBZ sensor 512	512λ/rotation
	VZ	Common to all models	1λ/rotation

Dimensions
[αiBZ sensor (conventional dimensions, with mounting ring)]

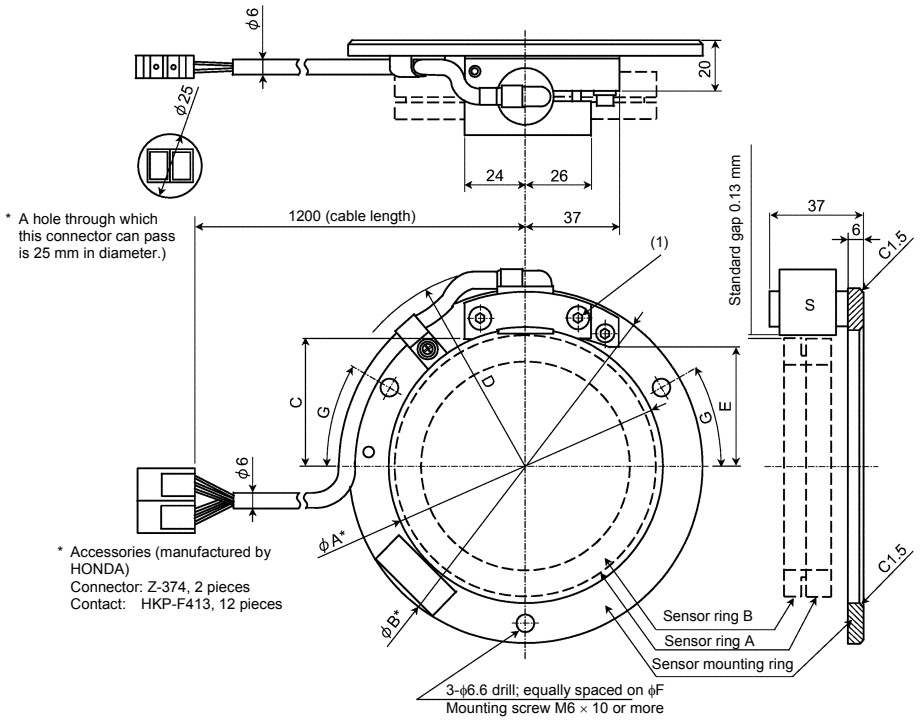

Sensor specification number	Sensor ring	Number of teeth	φA *	φB *	C	D	E	φF	G
A860-2120-T201	Ring 1	128	56H6 $^{+0.019}_{-0.0}$	100h6 $^{+0.0}_{-0.022}$	25	R57	20	78	10°
A860-2120-T211	Ring 2								
A860-2120-T401	Ring 3	256	108 $^{+0.040}_{+0.020}$	140h6 $^{+0.0}_{-0.025}$	51	R80	46	124	30°
A860-2120-T411	Ring 4								

For the dimensions of the sensor rings, see "Sensor rings" described later.

NOTE
- Use the sensor at a temperature not higher than 80°C.
- The sensor is a precision part. Use special care in handling. Particularly, do not apply external force to the S section.
- The sensor is an electronic part. To prevent chips, oil, water, and other harmful materials from being attached to the sensor, take dust-proof and water-proof measures on the machine side.
- The dimensions marked with an asterisk (*) are the dimensions of the sensor mounting ring. The socket on the machine side must be designed according to these dimensions. If the socket on the machine side is not made properly, the sensor may output an incorrect signal.
- The gap between the sensor and sensor ring is preadjusted. Because of a dimensional error in the mounting socket and so on, the output signal may not satisfy the specified level. Therefore, when mounting the sensor, check the output signal. If the output signal does not satisfy the specified level, loosen the screws(*1) and adjust the gap. Tighten the screws(*1) with a torque of 1.2 Nm (12 kgfcm) ±10%. After tightening the screws, insert a 0.1-mm thickness gage to check that there is a gap of at least 0.1 mm between the sensor and sensor ring. For the output signal level in gap adjustment, refer to Part II, "INSTALLATION," of "FANUC BUILT-IN AC SPINDLE MOTOR αi series DESCRIPTIONS (B-65292EN)."
- Make a shield wire connection.
- For easy maintenance, mount the sensor at a position where it can be replaced easily.
- Sensor rings with the same specification number can be replaced with each other.
- Sensor rings with different specification numbers cannot be used in combination.
- Mating connectors (accessories) are provided.

[αiBZ sensor (conventional dimensions, without mounting ring)]

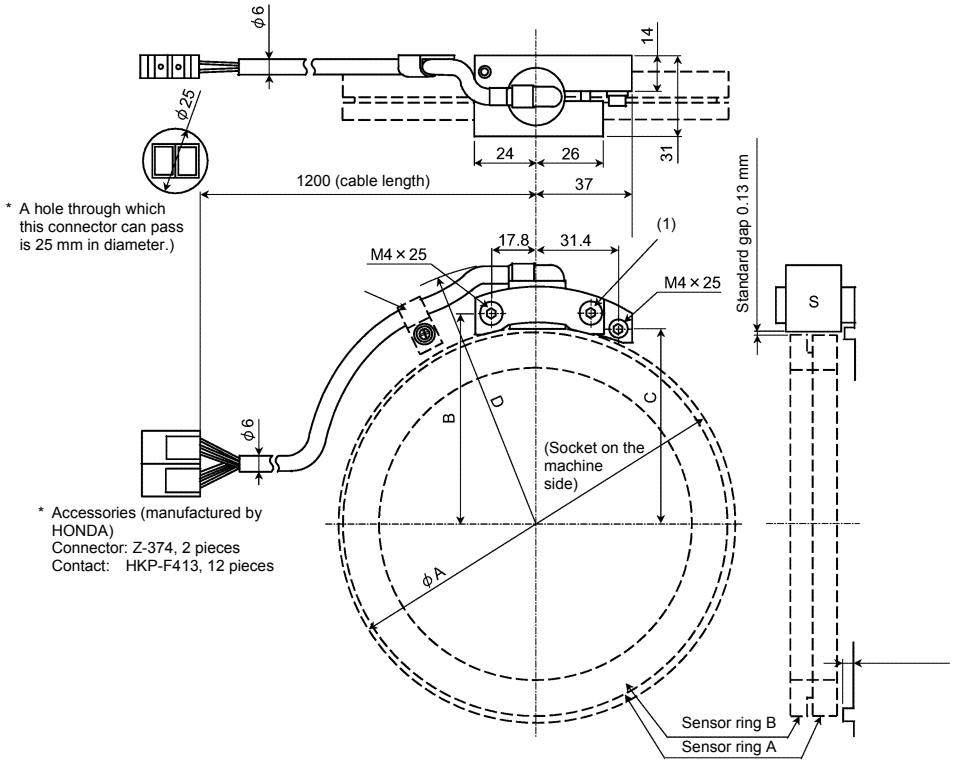

Sensor specification number	Sensor ring	Number of teeth	ϕA	B	C	D
A860-2120-T511	Ring 5	384	$158^{+0.0}_{-0.025}$	84.3	78.3	R110
A860-2120-T611	Ring 6	512	$210^{+0.0}_{-0.030}$	110.8	104.8	R140

For the dimensions of the sensor rings, see "Sensor rings" described later.

NOTE

- Use the sensor at a temperature not higher than 80°C.
- The sensor is a precision part. Use special care in handling. Particularly, do not apply external force to the S section.
- The sensor is an electronic part. To prevent chips, oil, water, and other harmful materials from being attached to the sensor, take dust-proof and water-proof measures on the machine side.
- Mount the sensor while pressing it against the socket (dimension ϕA) on the machine side (the height of the socket on the machine is 4.5 mm or less).
- The gap between the sensor and sensor ring is preadjusted. Because of a dimensional error in the mounting socket and so on, the output signal may not satisfy the specified level. Therefore, when mounting the sensor, check the output signal. If the output signal does not satisfy the specified level, loosen the screws(*1) and adjust the gap. Tighten the screws(*1) with a torque of 1.2 Nm (12 kgfcm) ±10%. After tightening the screws, insert a 0.1-mm thickness gage to check that there is a gap of at least 0.1 mm between the sensor and sensor ring. For the output signal level in gap adjustment, refer to Part II, "INSTALLATION," of "FANUC BUILT-IN AC SPINDLE MOTOR αi series DESCRIPTIONS (B-65292EN)."
- Use M4 × 20 mm and M4 × 25 mm screws for mounting.
- Fasten the cable at a proper position so that no direct force is applied to the sensor when the cable is pulled.
- Make a shield wire connection.
- For easy maintenance, mount the sensor at a position where it can be replaced easily.
- Sensor rings with the same specification number can be replaced with each other.
- Sensor rings with different specification numbers cannot be used in combination.
- Mating connectors (accessories) are provided.

Sensor rings

Sensor ring (Phase A/B ring)

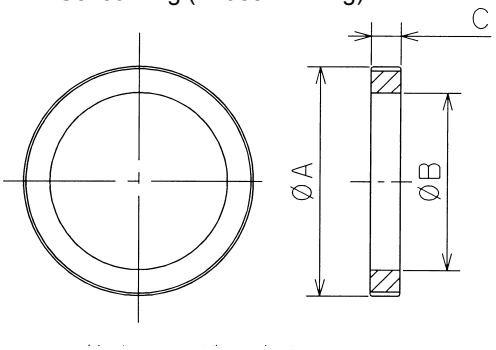

Sensor ring (Phase Z ring)

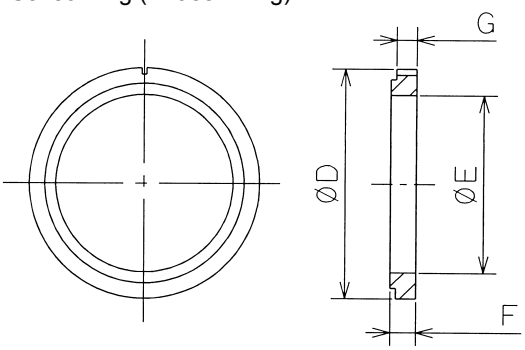

Dimensions of sensor rings

	Phase A/B ring			Phase Z ring			
	ϕA	**ϕB**	**C**	**ϕD**	**ϕE**	**F**	**G**
Ring 1, 2	$52^{+0.0}_{-0.020}$	$40^{+0.016}_{-0.0}$	10±0.1	$52^{+0.0}_{-0.020}$	$40^{+0.016}_{-0.0}$	8.6±0.1	6.7
Ring 3, 4	$103.2^{+0.0}_{-0.020}$	$82^{+0.0}_{-0.018}$	10±0.1	$103.2^{+0.0}_{-0.020}$	$82^{+0.0}_{-0.018}$	8.6±0.1	6.7
Ring 5	$154.4^{+0.0}_{-0.020}$	$125^{+0.025}_{-0.0}$	10±0.1	$154.4^{+0.0}_{-0.020}$	$125^{+0.025}_{-0.0}$	8.6±0.1	6.7
Ring 6	$205.6^{+0.0}_{-0.020}$	$160^{+0.020}_{-0.005}$	10±0.1	$205.6^{+0.0}_{-0.020}$	$160^{+0.020}_{-0.005}$	8.6±0.1	6.7

For the dimensions of sensors, see "[αiBZ sensor]" above.

NOTE
- Press fit the rings around a sleeve then assemble the sleeve with the spindle.
- A used ring can be reused only once.
- The circumference of a ring has special teeth. Therefore, be careful not to deform or chip the circumference by external force.
- Check the sensor output signal. For the adjustment of the output signal, refer to Part II, "INSTALLATION," of "FANUC BUILT-IN AC SPINDLE MOTOR αi series DESCRIPTIONS (B-65292EN)."

Maximum speed of sensor rings

Ring	Ring 1	Ring 2	Ring 3	Ring 4	Ring 5	Ring 6
Sensor specification number	T201	T211	T401	T411	T511	T611
Number of teeth	128	128	256	256	384	512
Max. speed (min^{-1})	20,000	70,000	15,000	30,000	15,000	10,000

NOTE
- The interference for shrink fitting varies, depending on the maximum speed used. When designing sensor rings, see " Installing the αiBZ sensor"

Installing the αiBZ sensor (conventional dimensions)

Install ring A and ring B as shown below.

- Press fit the rings around the sleeve then press fit the sleeve around the shaft. Contact the phase A/B ring with phase Z ring.
- Mount the sensor so that the distance between the mid point of the thickness of the stack of the phase A/B ring and phase Z ring (9.3 mm) and the center of the sensor is within ±0.5 mm.
- The runout of the sleeve to the center of the shaft must be within 0.005 mm.
- The runout of the mounting ring to the center of the shaft must be within 0.02 mm.

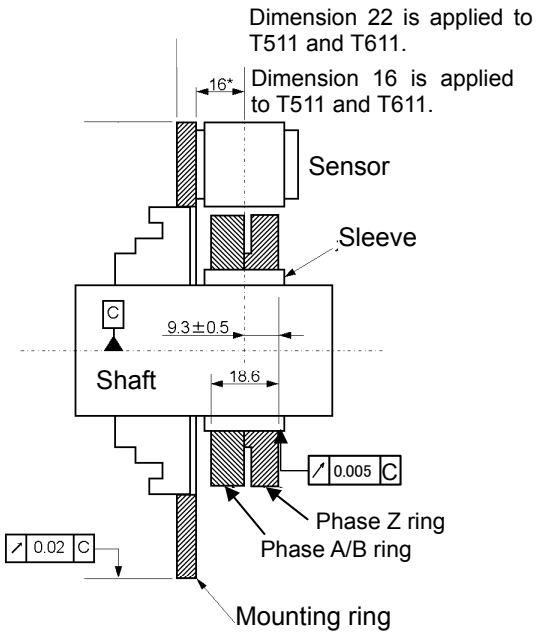

Interference

The table below indicates the interference of the sensor rings at each maximum speed.

Unit: μm

Maximum speed (min^{-1})	T201	T211	T401	T411	T511	T611
	Ring 1	Ring 2	Ring 3	Ring 4	Ring 5	Ring 6
3000	ϕ6 to ϕ32	ϕ6 to ϕ32	ϕ7 to ϕ35	ϕ7 to ϕ35	ϕ8 to ϕ43	ϕ11 to ϕ41
3500	↓	↓	↓	↓	ϕ9 to ϕ44	ϕ13 to ϕ43
4500	↓	↓	↓	↓	ϕ11 to ϕ46	ϕ19 to ϕ49
6000	↓	↓	ϕ9 to ϕ37	ϕ9 to ϕ37	ϕ15 to ϕ50	ϕ29 to ϕ59
8000	↓	↓	ϕ11 to ϕ39	ϕ11 to ϕ39	ϕ24 to ϕ59	ϕ47 to ϕ77
10000	↓	↓	ϕ14 to ϕ42	ϕ14 to ϕ42	ϕ35 to ϕ70	ϕ71 to ϕ101
12000	ϕ7 to ϕ33	ϕ7 to ϕ33	ϕ18 to ϕ46	ϕ18 to ϕ46	ϕ47 to ϕ82	
15000	ϕ8 to ϕ34	ϕ8 to ϕ34	ϕ26 to ϕ54	ϕ26 to ϕ54	ϕ71 to ϕ106	
20000	ϕ10 to ϕ36	ϕ10 to ϕ36		ϕ41 to ϕ69		
25000		ϕ12 to ϕ38		ϕ62 to ϕ90		
30000		ϕ15 to ϕ41		ϕ87 to ϕ115		
40000		ϕ23 to ϕ49				
50000		ϕ33 to ϕ59				
60000		ϕ43 to ϕ69				
70000		ϕ57 to ϕ83				

NOTE

- From the table above, select the suitable interference according to the maximum speed and the type of ring used. If an interference not listed above is applied, the ring will be damaged or loosen while the spindle rotates.
- These rings cannot be used at a speed higher than the speeds specified in the above table.

J.2.2 αiCZ Sensor (Analog Output, A860-2140-T***)

The αiCZ sensor (analog output, A860-2140-T***) is a sensor of analog output type used for the spindle or used as a separate sensor. Note that the interface and system configuration of this sensor differ from those of the absolute αiCZ sensor (A860-2142-T***) described later.

Names and specification numbers

Name	Specification number	Remarks			
		Number of teeth	Maximum speed	Sensor ring	
				Inner diameter	Outer diameter
αiCZ sensor 512	A860-2140-T411	512	15,000min^{-1}	φ82	φ102.8
αiCZ sensor 768	A860-2140-T511	768	10,000min^{-1}	φ125	φ154
αiCZ sensor 1024	A860-2140-T611	1024	8,000min^{-1}	φ160	φ205.2

Absolute maximum ratings

Item	Specification
Power supply voltage	-0.5 V to +7.0 V
Operating temperature range	0°C to +50°C
Humidity	95%RH or less

Electrical specifications

Item			Specification
Power supply voltage			5 V ±5%
Current consumption			150 mA or less
Output signal	VA, VB	αiCZ sensor 512	512λ/rotation
		αiCZ sensor 768	768λ/rotation
		αiCZ sensor 1024	1024λ/rotation
	VZ	Common to all models	1λ/rotation

Signal name	Check pin	Output amplitude	Offset
Phase A Phase B	A (Relative to T01) B (Relative to T01)	1000±100mVp-p	±50mV
Phase Z	Z (Relative to RZ)	660 to 1650 mVp-p	±50mV

(Preamplifier output at room temperature and 500 min^{-1})

For connector pins, see "Details of cable (K89) for connection with the αiSP series" described later.

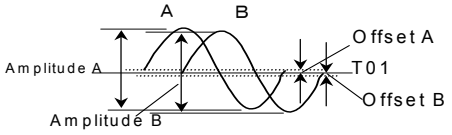

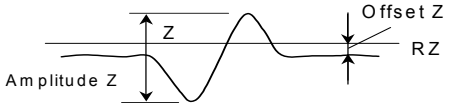

Dimensions

αiCZ sensor 512

A860-2140-T411

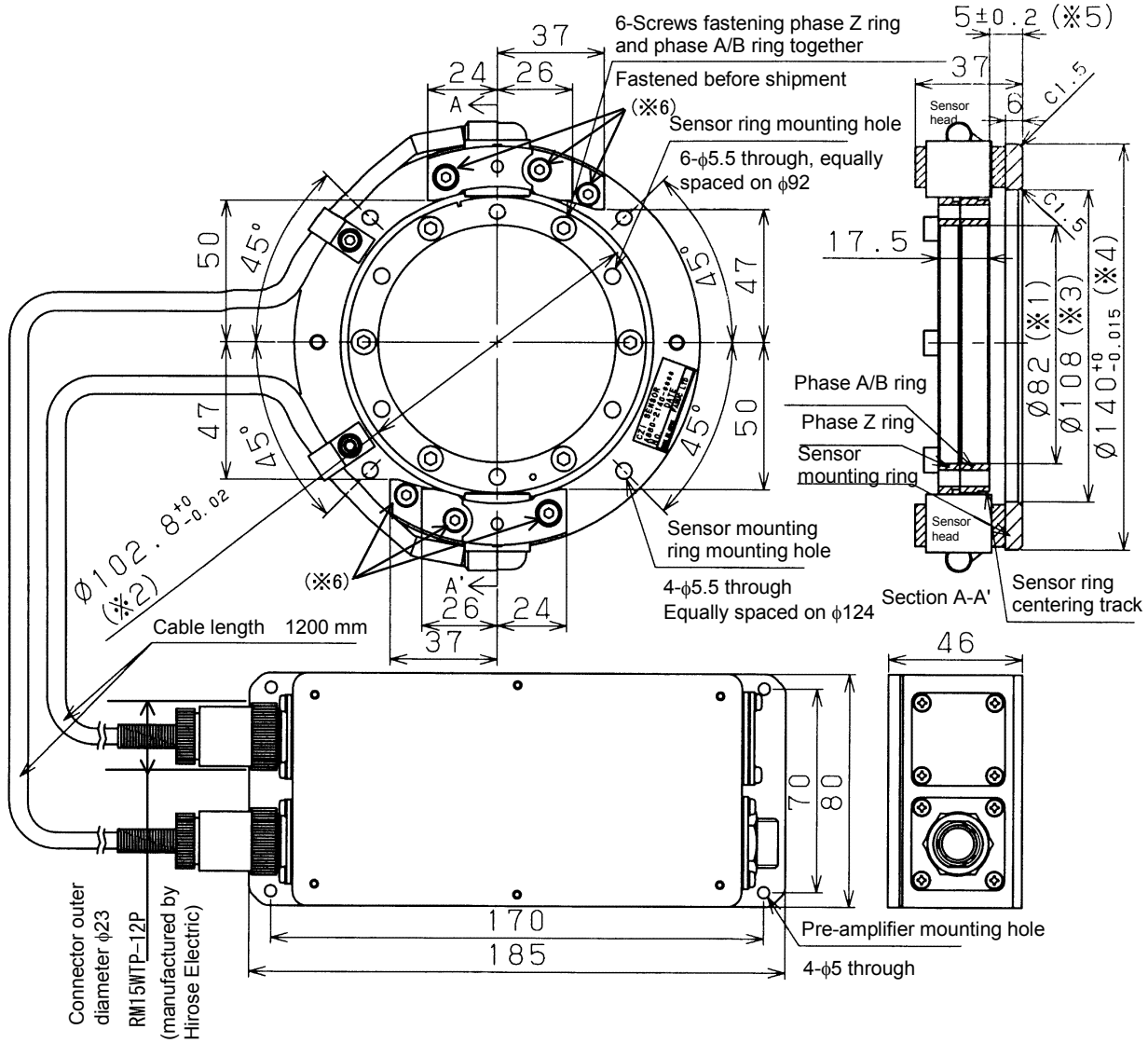

For details of installation, see "Installation."

NOTE
- The inner diameter(*1) of the sensor ring is set with a plus tolerance. (*2) indicates the outer diameter of the tooth surface of the sensor ring.
- The inner diameter(*3) of the sensor mounting ring is set with a plus tolerance. (*4) indicates the outer diameter of the sensor mounting ring.
- (*5) indicates the distance from the bottom of the sensor mounting ring to the bottom of the sensor ring.
- The sensor head cannot be adjusted mechanically. So, do not loosen the screws marked (*6).
- Use the sensor at a temperature not higher than 50°C.
- Because the αiCZ sensor is adjusted as a combination of the sensor ring, sensor, and preamplifier in advance, they must be used as a set.
- The sensor is a precision part. Use special care in handling. Particularly, do not apply external force to the sensor element.
- The sensor is an electronic part. To prevent chips, oil, water, and other harmful materials from being attached to the sensor, take dust-proof and water-proof measures on the machine side.
- The waterproofness of the preamplifier box is equivalent to IP55. However, if the preamplifier box is continuously exposed to coolant, for example, the sensor can fail. Provide highest-level water protection to prevent the preamplifier box from being exposed to coolant or the like.
- Ensure that no vibration greater than 1 G is applied to the preamplifier box.
- Make a shield wire connection. Connect the preamplifier box to ground or to the machine cabinet.
- For easy maintenance, mount the sensor at a position where it can be replaced easily.

αiCZ sensor 768
A860-2140-T511

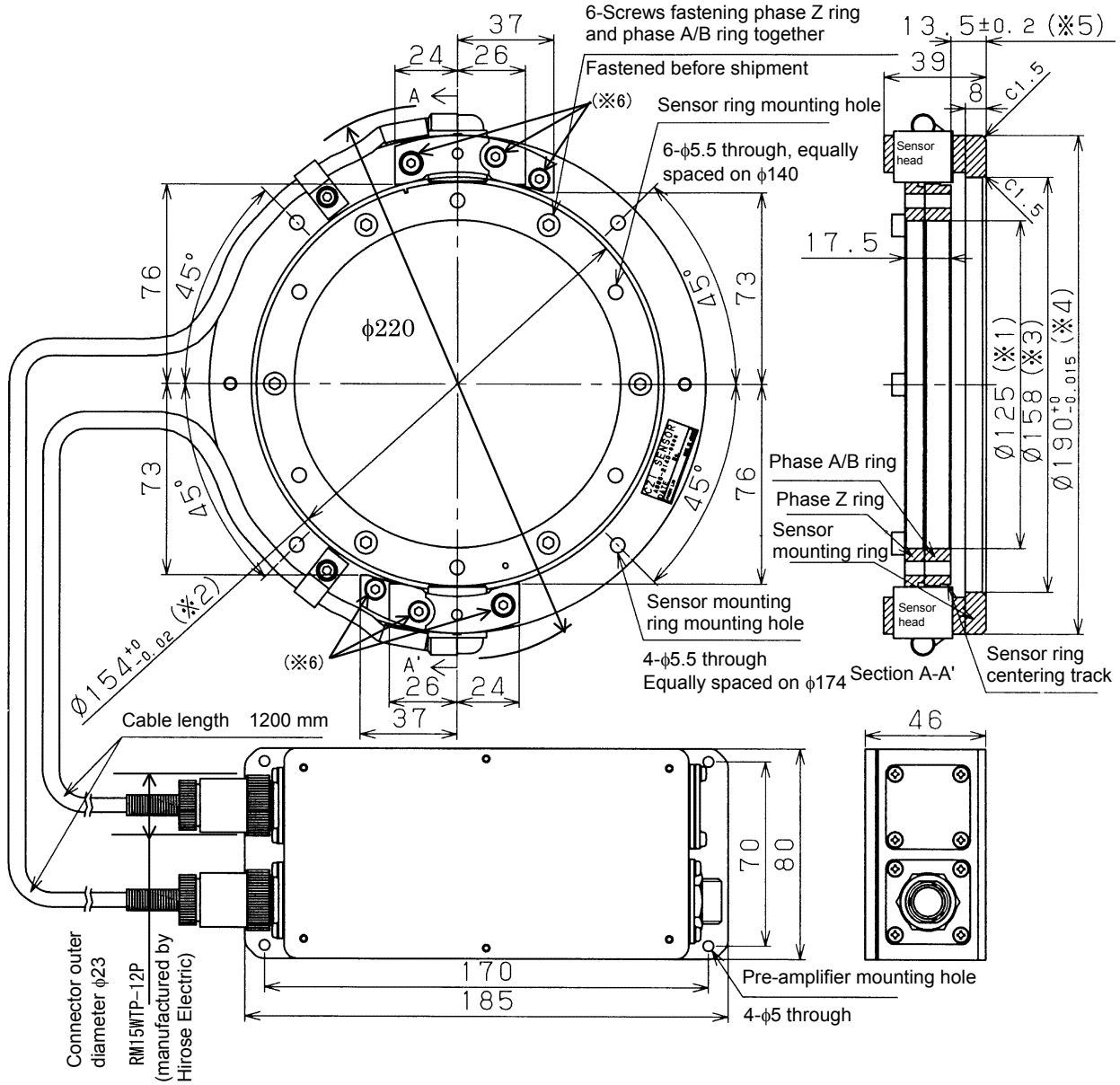

For details of installation, see "Installation."

NOTE
- The inner diameter(*1) of the sensor ring is set with a plus tolerance. (*2) indicates the outer diameter of the tooth surface of the sensor ring.
- The inner diameter(*3) of the sensor mounting ring is set with a plus tolerance. (*4) indicates the outer diameter of the sensor mounting ring.
- (*5) indicates the distance from the bottom of the sensor mounting ring to the bottom of the sensor ring.
- The sensor head cannot be adjusted mechanically. So, do not loosen the screws marked (*6).
- Use the sensor at a temperature not higher than 50°C.
- Because the αiCZ sensor is adjusted as a combination of the sensor ring, sensor, and preamplifier in advance, they must be used as a set.
- The sensor is a precision part. Use special care in handling. Particularly, do not apply external force to the sensor element.
- The sensor is an electronic part. To prevent chips, oil, water, and other harmful materials from being attached to the sensor, take dust-proof and water-proof measures on the machine side.
- The waterproofness of the preamplifier box is equivalent to IP55. However, if the preamplifier box is continuously exposed to coolant, for example, the sensor can fail. Provide highest-level water protection to prevent the preamplifier box from being exposed to coolant or the like.
- Ensure that no vibration greater than 1 G is applied to the preamplifier box.
- Make a shield wire connection. Connect the preamplifier box to ground or to the machine cabinet.
- For easy maintenance, mount the sensor at a position where it can be replaced easily.

αiCZ sensor 1024
A860-2140-T611

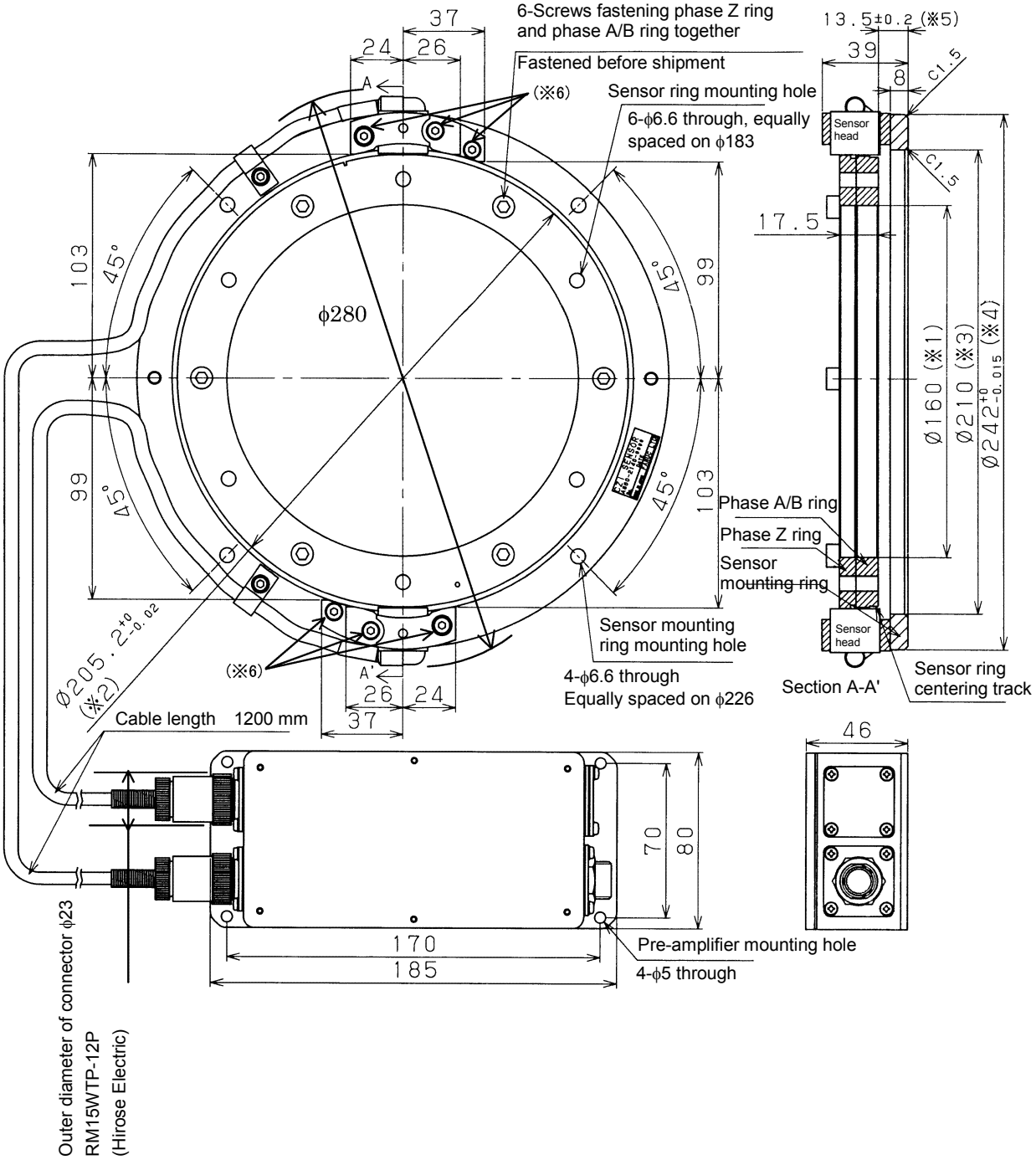

For details of installation, see "Installation."

NOTE

- The inner diameter(*1) of the sensor ring is set with a plus tolerance. (*2) indicates the outer diameter of the tooth surface of the sensor ring.
- The inner diameter(*3) of the sensor mounting ring is set with a plus tolerance. (*4) indicates the outer diameter of the sensor mounting ring.
- (*5) indicates the distance from the bottom of the sensor mounting ring to the bottom of the sensor ring.
- The sensor head cannot be adjusted mechanically. So, do not loosen the screws marked (*6).
- Use the sensor at a temperature not higher than 50°C.
- Because the αiCZ sensor is adjusted as a combination of the sensor ring, sensor, and preamplifier in advance, they must be used as a set.
- The sensor is a precision part. Use special care in handling. Particularly, do not apply external force to the sensor element.
- The sensor is an electronic part. To prevent chips, oil, water, and other harmful materials from being attached to the sensor, take dust-proof and water-proof measures on the machine side.
- The waterproofness of the preamplifier box is equivalent to IP55. However, if the preamplifier box is continuously exposed to coolant, for example, the sensor can fail. Provide highest-level water protection to prevent the preamplifier box from being exposed to coolant or the like.
- Ensure that no vibration greater than 1 G is applied to the preamplifier box.
- Make a shield wire connection. Connect the preamplifier box to ground or to the machine cabinet.
- For easy maintenance, mount the sensor at a position where it can be replaced easily.

Installation

Installing the sensor ring

Install the flange on the shaft side and screw it in the axis direction by using the sensor ring mounting hole. In assembly, perform centering using the centering track so that the swing from the center of rotation is 10 μm or less.

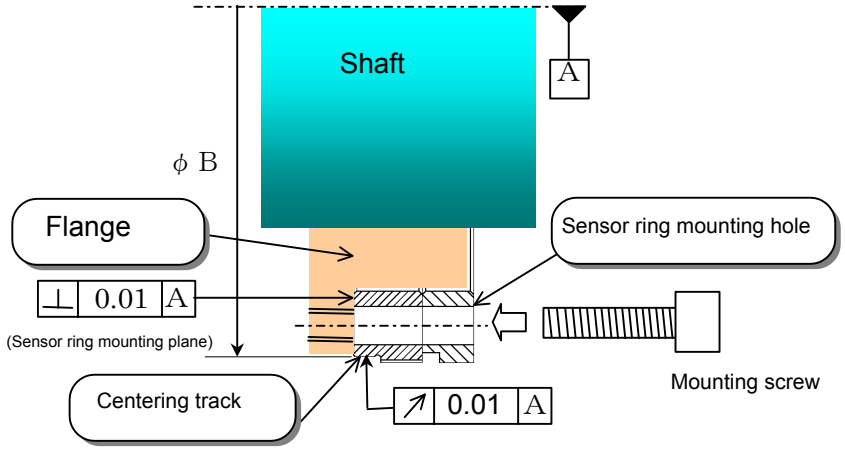

Specification	Outer diameter of centering track (ϕB)	Positions of sensor ring mounting holes	Mounting screw	Recommended tightening torque (Nm)
A860-2140-T411	ϕ101	6-ϕ5.5 through, equally spaced on ϕ92 circumference	M5	2.4 to 3.4
A860-2140-T511	ϕ152.2	6-ϕ5.5 through, equally spaced on ϕ140 circumference	M5	2.4 to 3.4
A860-2140-T611	ϕ203.4	6-ϕ6.6 through, equally spaced on ϕ183 circumference	M6	4.1 to 5.8

NOTE

- For centering, the outer diameter of the flange must be designed so that there is a gap of about 0.1 mm between the flange and the inner surface of the sensor ring.
- Secure the sensor ring on the end face with screws (avoid heat shrink fitting to mount the sensor ring).
- The sensor ring consists of a phase Z ring and phase A/B ring, which are fastened together by using screws in advance. Never detach these screws. Spot facing is not provided. So, at the time of machine design, be careful not to cause interference with the screw heads.
- Centering must be performed with the centering track (the outer surface of the phase Z ring and the teeth pitch circle are not coaxial). When performing centering, use a tool such as a plastic hammer not to damage the gear teeth.
- Magnetic matter attached to gear teeth can lead to a detection error. After centering is completed, remove such foreign matter by air blowing.

Installing the sensor mounting ring

When installing the sensor mounting ring, provide a socket on the machine side, and fit the sensor mounting ring into the socket. (The dimensions of the socket on the machine side must satisfy the accuracy indicated in the table below. Otherwise, detection precision may deteriorate.) When fastening the mounting ring with the screws, press the mounting ring against the socket from the CN1 sensor side as shown in the figure below. After the installation, check that the gap between the sensor ring and sensor is 0.08 mm or more by using a thickness gage.

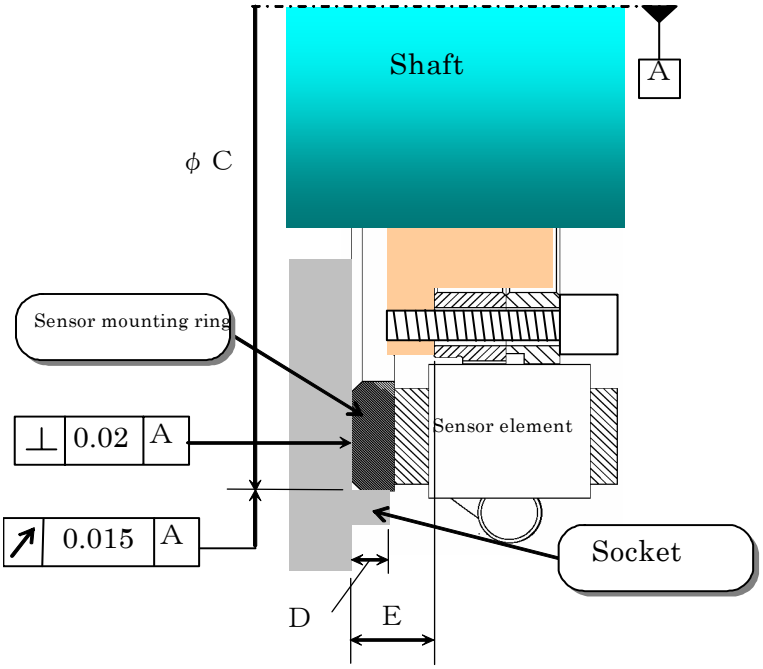

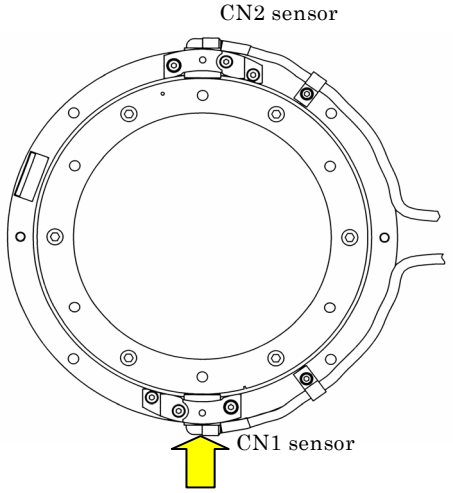

Fasten the sensor mounting ring while pressing it in the arrow direction.

Specification	Outer diameter of sensor mounting ring	Inner diameter of socket (ϕC)	Socket height (D)	Distance between bottom of sensor mounting ring and bottom of sensor ring (E)
A860-2140-T411	$\phi 140^{+0}_{-0.015}$	$\phi 140^{+0.015}_{-0}$	5.5 or less	11.5±0.2
A860-2140-T511	$\phi 190^{+0}_{-0.015}$	$\phi 190^{+0.015}_{-0}$	7.5 or less	13.5±0.2
A860-2140-T611	$\phi 242^{+0}_{-0.015}$	$\phi 242^{+0.015}_{-0}$	7.5 or less	13.5±0.2

NOTE
- Provide a sock on the machine side where possible, and fit the sensor mounting ring into the socket. Avoid making centering adjustments by tapping the outer surface of the sensor mounting ring.

Installing the OH line

Open the lid of the preamplifier box, and remove the connector cover on the CN4 side. Draw the OH line from CN4 and connect the line to the terminal block on the printed circuit board.

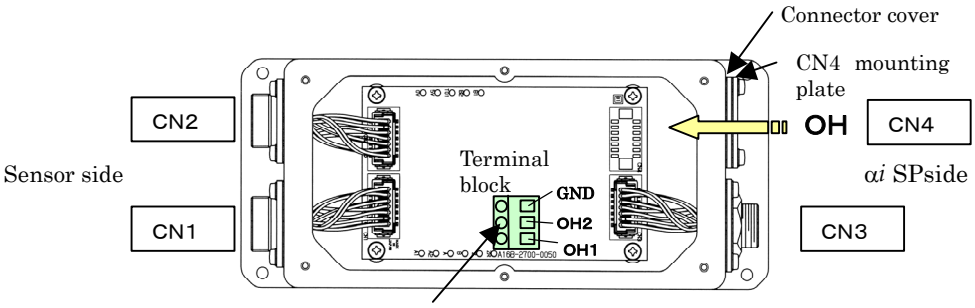

Tighten with flat-blade screwdriver (tightening torque: 0.3 Nm).

A cable clamp for the OH line is to be prepared by the user. Use the attached CN4 connector mounting plate to secure the cable clamp.

Recommended cable clamp: SKINTOP ST-7 from Lapp Kabel
Outer diameter of the OH cable: ϕ5.2±0.3
Hole diameter on the CN4 connector mounting plate: ϕ13

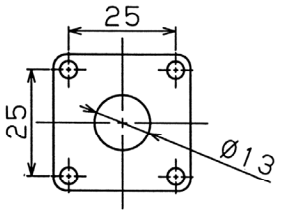

CN4 connector mounting plate

NOTE

- Adjustments have been made for the sensor, preamplifier, and sensor ring at the same time. Therefore, use them as a set. The variable resistor on the printed circuit board in the preamplifier is also adjusted in advance. So, do not readjust the variable resistor. Furthermore, the sensors cannot be adjusted mechanically. So, do not loosen the screws fastening the CN1 and CN2 sensors.
- The connectors on the sensor side are labeled "CN1" (in black) and "CN2" (in blue). Make connections according to the figure above.

Checking the output signals

When checking the output signals, see "Electrical specifications." (The output signals need not be adjusted.)

- Supply power to the 0 V and 5 V pins when checking the waveforms without making a connection to the αi SP.
- The Lissajous figure of the phase A/B output signal is a complete circle.

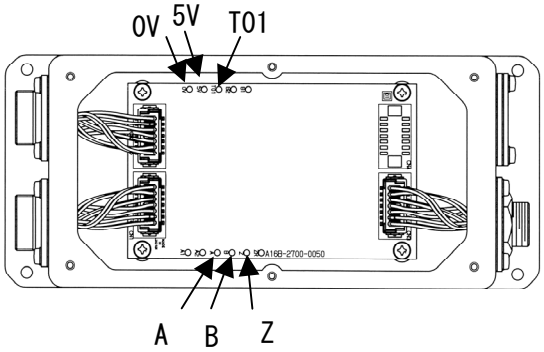

Details of cable (K89) for connection with the αiSP series

When the CZ*i* sensor is used as a separate sensor (connected to connector JYA4), THR1 and THR2 need not be wired.

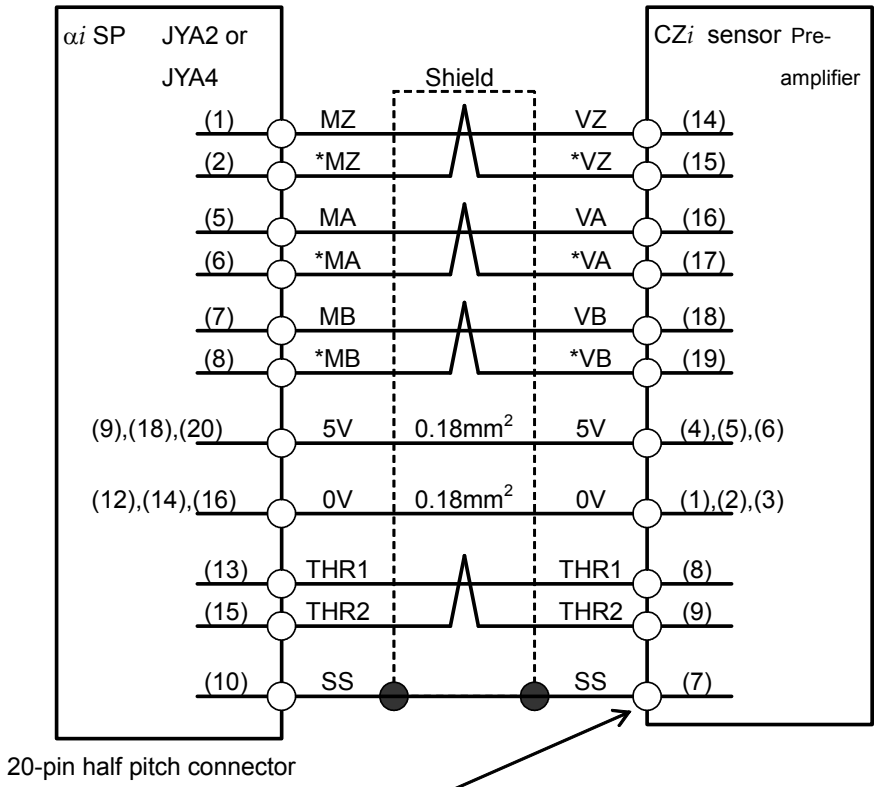

Hirose Electric
Crimp type
Crimp pin: HR22-SC-122 (15 pins required per connector)
Housing: HR22-12WTPA-20SC
Crimping tool: HR22-TA-2428HC (Hirose Electric)
Solder type
HR22-12WTPA-20S

Cable specification: 0.18-mm^2 twisted pair 4 pairs + 0.18-mm^2 6 common shielded cable
Recommended wire: A66L-0001-0367
For the connector conforming to the recommended wire on the JYA2 side, see Subsection 9.4.1.
For cable details, see Appendix B, "CABLES."

K MAGNETIC SENSOR SIGNAL CONVERSION ADAPTER

By using a magnetic sensor signal conversion adapter for compatibility with the α series, orientation based on the magnetic sensor method can be used with the α*i* SP series.
In the case of new design, however, employment of a standard spindle sensor of the αi series (such as the α*i* BZ sensor) is recommended.

K.1 ORDERING INFORMATION

- Magnetic sensor signal conversion adapter

Specification number	
A06B-6111-H402	With no cable

- This adapter needs to be used in combination with the αi SP series TYPE B.
- For details of the magnetic sensor, refer to "FANUC SERVO AMPLIFIER a series DESCRIPTIONS (B-65162EN)."

K.2 SPECIFICATIONS

Example of configuration

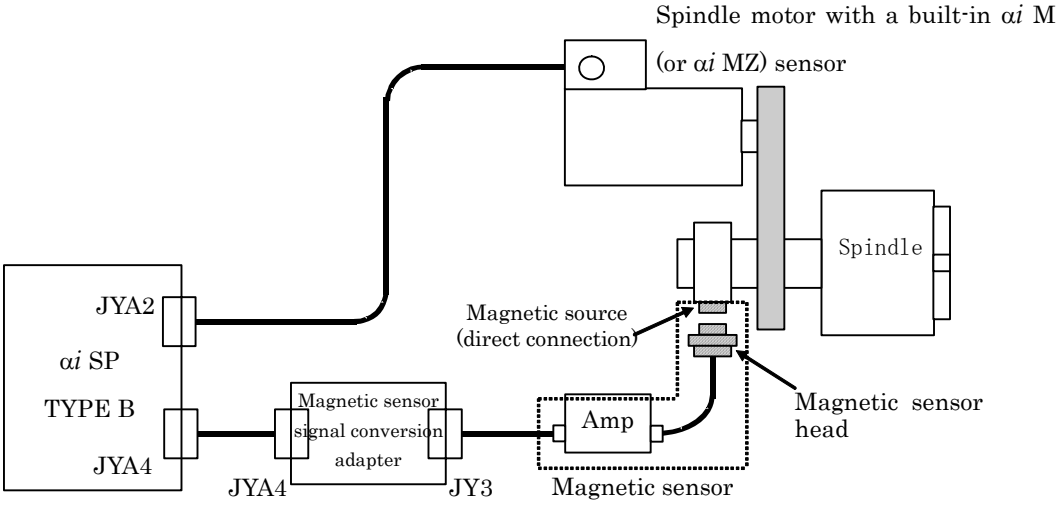

Applicable αiSP series

Specification number	Model
A06B-6142-Hxxx#H580	TYPE B, 200 V input
A06B-6152-Hxxx#H580	TYPE B, 400 V input

Notes

- A cable for connection between the αi SP and magnetic sensor signal conversion adapter needs to be prepared by the user.
- Operating temperature range: 0°C to 55°C
- The design of this adapter assumes that this adapter is housed in a cabinet such as a power magnetics cabinet, and no waterproof measures are taken.

K.3 DIMENSIONS

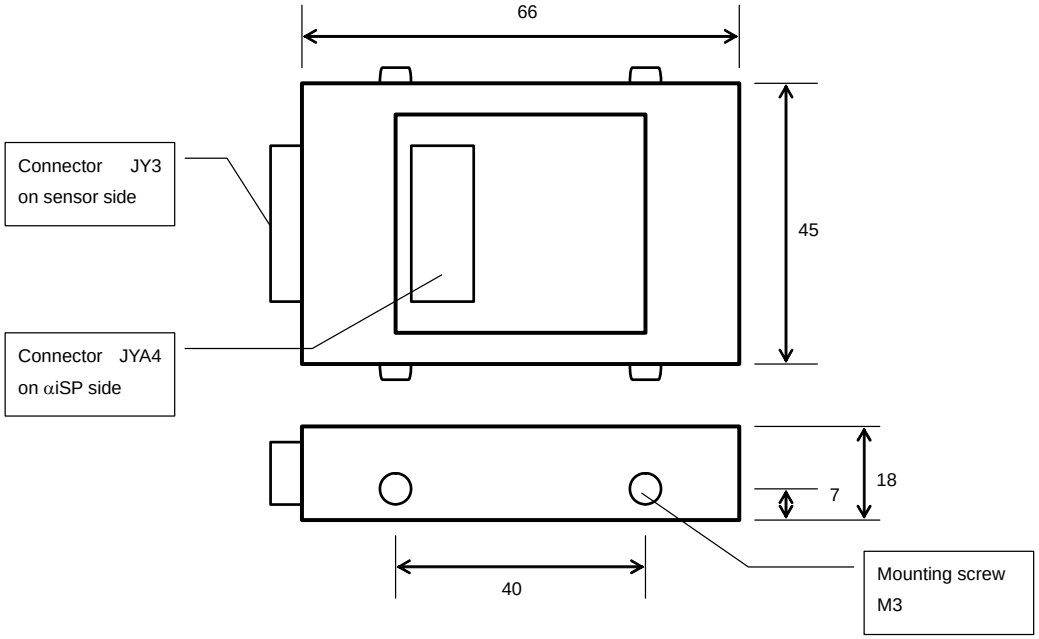

NOTE
When installing this adapter in a cabinet, use the M3 mounting screws on the side with an L-shaped mounting hardware.

K.4 CONNECTION

Overall connection

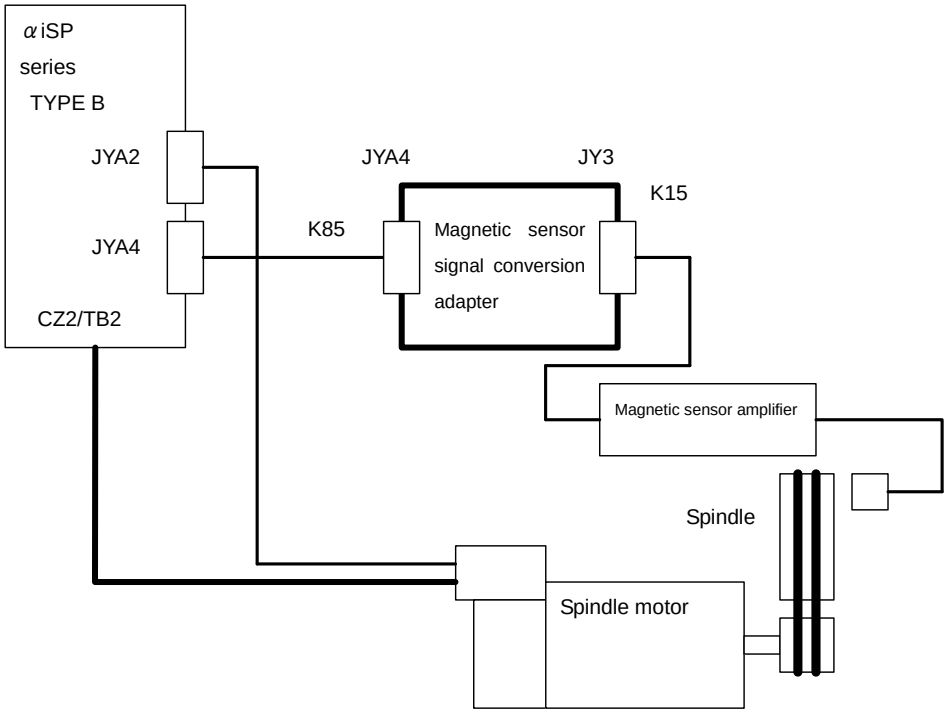

Details of K85 connection

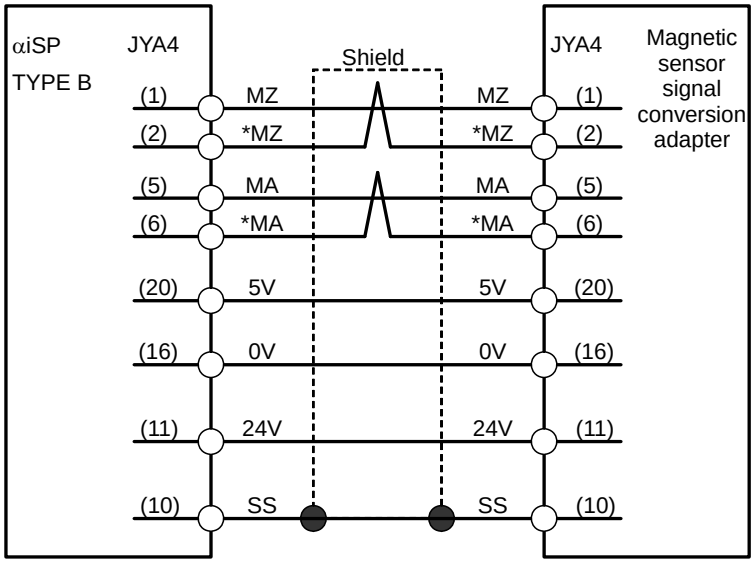

Cable specification

0.18-mm^2 twisted pair 2 pairs + 0.5-mm^2 3 common shielded cable

Recommended wire: A66L-0001-0368

Maximum cable length: 3 m

Connector to be used

Connector: FI40A-20S, Housing: FI-20-CV5, Manufacturer: Hirose Electric

Details of K15 connection

Refer to "FANUC SERVO AMPLIFIER a series DESCRIPTIONS (B-65162EN)."

K.5 METHOD OF ADJUSTMENT

While rotating the spindle at a speed of about 100 min^{-1}, check that the following waveforms can be obtained from the check pins PA2 and PS2 on the spindle check board (A06B-6078-H001). The waveforms below are obtained when the spindle is rotated in the reverse direction (SRV direction).

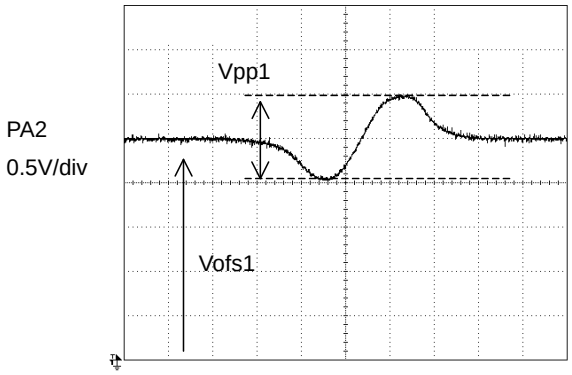

Specification: Vpp1 = 0.5 V to 1.2 V, Vofs1 = 2.5 V ± 100 mV

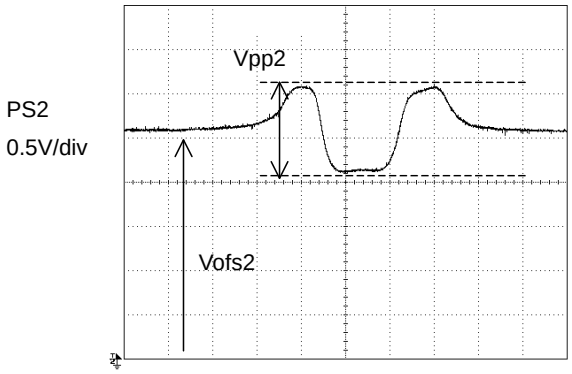

Specification: Vpp2 = 0.5 V to 1.2 V, Vofs2 = 2.6 V ± 100 mV

(Tip) Combining PA2 and PS2

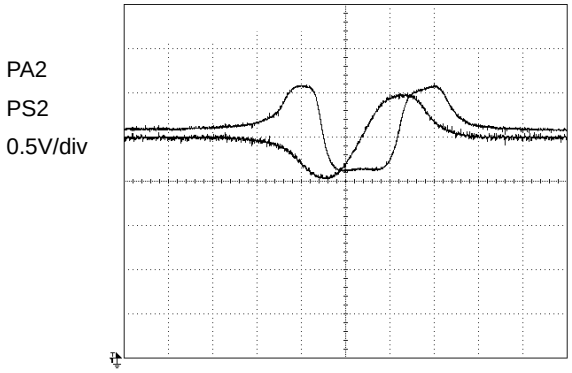

L HARMONIC LEAKAGE CURRENT

Method of filling the harmonic leakage current calculation sheet according to the harmonics suppression measure guideline

This appendix provides the method of filling "Calculation sheet of harmonic leakage current from harmonic emission devices (No. 1)" by the user in connection with "Harmonics suppression measure guideline for users who receive power at high or specially high voltages" issued from Agency for JAPAN Natural Resources and Energy of the Ministry of Economy, Trade, and Industry.
Servo amplifier data needed for filling the calculation sheet is provided below.

Servo amplifier data

Device name: Servo amplifier for velocity control
Manufacturer: FANUC LTD.
Model: Enter the drawing number of the servo amplifier.
Rated capacity: Refer to the descriptions of each servo amplifier.

- For rated capacity calculation, see "How to calculate the power equipment capacity" in Subsection 2.3.1.
  For "Minor circuit classification No." and "Conversion coefficient Ki," use the values on the table provided below.

- This appendix describes the method of filling the calculation sheet when no device for harmonic leakage current suppression is installed.
  If a device for harmonic leakage current suppression is already installed, "Calculation sheet of harmonic leakage current from harmonic emission devices (No. 2)" needs to be submitted.

- The circuit classification of a servo amplifier is 1 or 3. So, "Application of harmonic emission device manufacturers," which is required for circuit classification 10, need not be prepared.

- For details of the guideline, calculation method, and so forth, the user is requested to contact its electric power company.

Name	Target amplifier drawing number	Minor circuit classification No.	Conversion coefficient Ki	Remarks
Power supply (αiPS)	A06B-6110-Hxxx	32	1.8	NOTE
Power supply (αiPS HV)	A06B-6120-Hxxx	32	1.8	NOTE
Power supply (αiPSR)	A06B-6115-Hxxx	32	1.8	NOTE
Power supply (αiPS, Upgraded Version)	A06B-6140-Hxxx	32	1.8	NOTE
Power supply (αiPS HV, Upgraded Version)	A06B-6150-Hxxx	32	1.8	NOTE

NOTE

When the αi series amplifier is used, no separate calculation is needed for each of the servo amplifier (αiSV) and spindle amplifier (αiSP). A calculation may be made for the αiPS or αiPSR.

INDEX

<Number>

10-PAIR CABLE 405,420
200-V Input Series 3,46,81,85,128
200-V INPUT SERIES POWER SUPPLY 400
20-Pin Half-Pitch Connectors 301
24-V power supply 122,125
400-V Input Series 6,50,82,85,134
400-V INPUT SERIES POWER SUPPLY 402

<α>

α position coder S 353
α*i* position coder 350
α*i* PS series 33,46,50,128,134,195
α*i* PS Series Connection Diagram 207
α*i* PS_R series 46
α*i* SP series 40,49,53,133,139,203
α*i* SP Series Connection Diagram 259
α*i* SV series 37,47,51,129,135,200
α*i* SV series Connection Diagram 234
α*i*BZ Sensor (A860-2150-T*** and A860-2155-T***) 358
α*i*BZ Sensor (Conventional Dimensions, A860-2120-T***) 498
α*i*CZ Sensor (Analog Output, A860-2140-T***) 503
α*i*CZ Sensor (for the Spindle) 367

<A>

Absolute α*i*CZ Sensor (Separate Sensor) 328
Absolute α*i*CZ Sensor (Serial Output, A860-2142-T***) 483
Absolute maximum ratings 368
AC Line Filter 56,158
AC reactor 54
AC Reactor Unit 148
AMPLIFIER INSTALLATION 117
AMPLIFIER INSTALLATION NOTES RELATING TO SAFETY STANDARDS 118
Anti-Noise Devices 449
Anti-Noise Measures 442.443
Anti-Noise Measures for Power Supply Equipment and Grounding 446
APPLICATION TO PREVENTION OF VERTICAL AXES FROM FALLING AT POWER FAILURE 469

<B>

Battery for absolute Pulsecoder 78
Brake Circuit 470

<C>

Cabinet 113
Cable Clamp and Shield Processing 109
CABLE CONNECTION DETAILS 207
Cables 70,404
Caution s-5,s-9,s-12,403,476
Circuit Breaker 170
Circuit breaker and magnetic contactor 71
Classification in standards on insulation design 118,123
COMPOSITE 10-CORE CABLE 415
COMPOSITE 12-CORE CABLE 417
COMPOSITE 16-CORE CABLE 419
COMPOSITE 7-CORE CABLE 407
Concrete Examples of Anti-Noise Measures 444
Configuration 1,3,316
Confirming Effect 477
Connecting the battery (for the absolute Pulsecoder) 252
Connection 192,518,313,322,326
Connection block diagram (common to three models) .. 335
Connection specifications 336,381
Connector Installation Diagram (for Combination with α*i* SP 15) 321
CONNECTOR LOCATION 195
Connectors 58
COOLING 140

<D>

DC LINK TERMINAL BOARD SECTION PROTECTIVE COVER 462
DEFINITION OF WARNING, CAUTION, AND NOTE s-2
DESCRIPTIONS 453
Detailed description of the connection of cables K41 (for regenerative discharge resistance), K42 (for thermostat), and K43 (for fan motor) 231
Details of cable K1 (power supply line) 213
Details of cable K10 (power cable) 260
Details of cable K100 (for power failure detection output) 233

Details of cable K11 263
Details of cable K12 264
Details of cable K14 267
Details of cable K16 271
Details of cable K17 273
Details of cable K2 237,260
Details of cable K21 238
Details of cable K22 243
Details of cable K24 248
Details of cable K25 249
Details of cable K26 250
Details of cable K27 251
Details of cable K3 225
Details of cable K33 281
Details of cable K36 287
Details of cable K4 237
Details of cable K6 227
Details of cable K69 226,237,260
Details of cable K7 228
Details of cable K70 230,258,263
Details of cable K71 290
Details of cable K86 293
Details of cable K88 294
Details of cable K90 295
Details of cable K96 296
Details of cable K97 297
DETAILS OF CONNECTORS 301
Details of short bar K2 220
DIMENSIONS 517
Dynamic Brake Module (DBM) 168

<E>

EMC 121
ENVIRONMENTAL CONDITIONS 25
Environments for Amplifier Heat Sink Sections 458
Environments for Amplifier Installation 460
EXAMPLES OF RECOMMENDED POWER MAGNETICS CABINETS FOR SERVO AMPLIFIER INSTALLATION 451
External Dimensions 319
EXTERNAL DIMENSIONS AND MAINTENANCE AREA 141
EXTERNAL DIMENSIONS OF EACH CONNECTOR 421
External overload protection device 122,124

<F>

FEATURES OF THE SERVO AMPLIFIER αi SERIES 2
FEEDBACK CABLE LENGTH 431
FITTING A LIGHTNING SURGE PROTECTION DEVICE 399
Fuses 64

<G>

GROUND 104
Ground Systems 104
Grounding Method 105

<H>

HARMONIC LEAKAGE CURRENT 521
HEAT DISSIPATION 127
HOW TO MOUNT 464
How to Obtain the αi PS series maximum output capability 87
How to Obtain the αi PS series peak maximum output capability 88
How to Obtain the αi PS series rated output capability 87
How to Obtain the αi PS_R series Maximum Output Capability 91
How to Obtain the αi PS_R series Rated Output Capability 91
HOW TO SELECT THE αi PS series (POWER SUPPLY) 86
HOW TO SELECT THE αi PSR series (POWER SUPPLY, RESISTANCE DISCHARGE TYPE) 90
HOW TO SELECT THE αi SP series(SPINDLE AMPLIFIER) 84
HOW TO SELECT THE αi SV SERIES (SERVO AMPLIFIER) 80
How to Select the Dynamic Brake Module (DBM) 83
HOW TO SELECT THE MODULE 79

<I>

INPUT POWER 12
Installation 102,340,386
Installation conditions and notes 356
Interpolation error learning 391

<L>

LEAKAGE CURRENT 103
Lightning Surge Protector 74,179
LINEUP 10

LIST OF MOTOR OUTPUT CAPACITIES FOR αi PS AND αi PSR series SELECTION....96

<M>

Machine start-up procedure (outline)....385
Magnetic Contactors....172
MAGNETIC SENSOR SIGNAL CONVERSION ADAPTER....515
Maintenance target parts....393
MEASURES AGAINST NOISE FROM SERVO AMPLIFIERS....438
Method for Keeping Vertical Axis Motors Energized..473
Method for Supplying External Power to the Amplifier479
METHOD OF ADJUSTMENT....520
MISCELLANEOUS....450

<N>

Names and specification numbers....368
Noise Filter....75,182
NOISE OCCURRENCE IN SERVO AMPLIFIERS....439
NOISE PREVENTION....108
NOISE TYPES....440
Note....s-7,s-13,314,392
Notes on 400-V Input αi PS series selection....89
Notes on Connecting....107
NOTES ON COOLANT (REFERENCE)....126
Notes on the emergency stop circuit configuration....121
Notes on use....345
Number of Connected αi SV series and αi SP Series 89,92

<O>

ORDERING INFORMATION....45,516
Others....54,116
Outline Drawing....325
OUTLINE DRAWINGS....142
Outline Drawings of Amplifiers, Panel Cut-out, and Maintenance Area....142
Output signal check method....348,394
Outside and Mounting Dimension Diagrams....309
Overload protection....122,124
Over-speed protection....122,125

<P>

Panel Cut-out....326
PANEL CUT-OUT DIAGRAMS....185
Position Coder....350
POWER FAILURE DETECTION FUNCTION....465
POWER FAILURE DETECTION SPECIFICATION..467
POWER LINE FOR SERVO MOTOR AND AMPLIFIER....434
POWER LINE SWITCH CIRCUIT....306
Power Line Switch Unit....77,308
Power Magnetics Cabinet Seal-up....453
Power Transformer....65,159
Pre-Installation Arrangement....442
Procedure....469
Protection against electric shock....119,124
Protective grounding....121,124

<R>

Reduction of load ratio to ambient temperature....122
Regenerative discharge unit....69
Regenerative Discharge Unit....165
Requirements of EN and IEC Standards....118
Requirements of UL Standards....123
Rotation direction of the absolute αiCZ sensor....338
Rotation direction of the αiCZ sensor....384

<S>

SAFETY PRECAUTIONS....s-1
Screw tightening torque....122,125
SELECTING A POWER CABLE....435
Selecting a Regenerative Discharge Unit....93
SENSOR....327
SENSOR (OLD SPECIFICATIONS)....482
SENSOR FOR THE SERVO SYSTEM....328
SENSOR FOR THE SPINDLE....350,498
SENSOR FOR THE SYNCHRONOUS BUILT-IN SERVO MOTOR AND SEPARATE SENSOR....483
Sensors for servo....75
Sensors for spindle....76
Separation of Signal Lines....108
SERVO AMPLIFIER....8,46
SERVO CABLE LENGTH (WHEN RECOMMENDED CABLES ARE USED)....433
Servo Motor Continuous Rated Outputs and Maximum Outputs at Acceleration....96
Short-circuit protection....125
Specification....11,308,317,324,329,368,516
SPECIFICATIONS OF THE MODULES....33
Spindle alarms....396

SPINDLE CABLE LENGTH (WHEN RECOMMENDED CABLES ARE USED) 432
Spindle Motor Continuous Rated Outputs and Maximum Outputs at Acceleration 100
Spindle Motor Feedback Cable Connection 299
SPINDLE ORIENTATION 305
SPINDLE-RELATED OPTIONS 304
Sub module SM 57,323
Sub module SW 57,316
Switch Circuit Configuration 306
System configuration and connection block diagram 380

<T>

TOTAL CONNECTION DIAGRAM 193
Tyco Electronics AMP D-5000 Series Connector 302

<U>

USE IN COMBINATION WITH THE DUAL CHECK SAFETY FUNCTION 481

<W>

Warning s-3,s-8,s-10
WARNINGS AND CAUTIONS RELATING TO A PILOT RUN s-8
WARNINGS AND CAUTIONS RELATING TO MAINTENANCE s-10
WARNINGS AND CAUTIONS RELATING TO MOUNTING s-3
WEIGHT 43

Revision Record

FANUC SERVO AMPLIFIER αi series DESCRIPTIONS (B-65282EN)

Edition	Date	Contents	Edition	Date	Contents
05	Mar., 2003	- Addition and correction of following contents in the Chapter 9 CONNECTION Pulsecoder connection and cables around SPM - Addition of CZi sensor - Addition and Correction of αi_S,βi,αi_P,αi_T series			
04	Sep., 2002	- Addition of following chapter Chapter 10 SPINDLE-RELATED OPTIONS Chapter 11 SPINDLE-RELATED DETECTORS - Addition of data in the Chapter 6 HEAT DISSIPATION - Correction of errors			
03	Dec., 2001	- Correction of errors			
02	Nov., 2001	- Addition of α(HV)i series Amplifier - Addition of PSMR(register discharge type) - Addition of Spindle Amplifier Module (SPMC) for αCi series - Addition of Models (PSM-55i, SPM-45/55i, SVM1-360i, SVM2-4/4i, SVM3-4/4/4i)			
01	Apr., 2001	———	06	Dec., 2008	- Changing of model names - Switching level-up amplifiers - Deletion of SPMC - Reflection of technical reports of edition 05 to this edition

ADDITIONAL INFORMATION

About addition of the power cable of servo amplifier

1.Type of applied technical documents

Name	FANUC SERVO AMPLIFIER αi series DESCRIPTIONS
Spec.No./Ver.	B-65282EN/06

2.Summary of change

Group	Name / Outline	New,Add Correct,Del	Applicable Date
Basic Function	Add power cable	Add	11-Aug-2008
Optional Function			
Unit			
Maintenance Parts			
Notice			
Correction			
Another			

1. Outline

As a power cable of servo amplifier, the four-conductor power cable (U/V/W/G) is generally used, and the PWM noise generated by switching of the power transistor inside servo amplifier returns to the servo amplifier through a ground line, however, in case the impedance of the ground line becomes high when the power cable is long, some of PWM noise may not return through the ground line, and may affect other equipment.

Moreover, if electric connection of the motor flange and a machine is not enough, PWM noise may flow through the feedback cable of a pulse coder, and communication alarm between the servo amplifier and the pulse coder may be generated.

In these cases, an additional measure against PWM noise and an additional ground line were needed.

This time, a new cable that reduced the inductance of a ground line is prepared for the power cable of a servo amplifier. By reducing the inductance of a ground line, the PWM noise returns to the amplifier efficiently, and the risk of the malfunction by PWM noise is reduced.

2. Cable specification

(1) Specification (see the 4th clause about the details of specification)

Maker specification (OKI ELECTRIC CABLE)	Cross section (U/V/W)	Cross section (Ground)	FANUC specification	Rating	Standard length
SYM3X0.75SQ	0.75 mm^2	0.25mm^2 x3	A66L-0001-0607	105 degrees / 600V	100m
SYM3X1.25SQ	1.25 mm^2	0.43mm^2 x3	A66L-0001-0608	105 degrees / 600V	100m
SYM3X2SQ	2.0 mm^2	0.75mm^2 x3	A66L-0001-0609	105 degrees / 600V	100m
SYM3X3.5SQ	3.5 mm^2	1.25mm^2 x3	A66L-0001-0610	105 degrees / 600V	100m
SYM3X5.5SQ	5.5 mm^2	2.0mm^2 x3	A66L-0001-0611	105 degrees / 600V	100m
SYM3X8SQ	8 mm^2	2.7mm^2 x3	A66L-0001-0612	105 degrees / 600V	100m

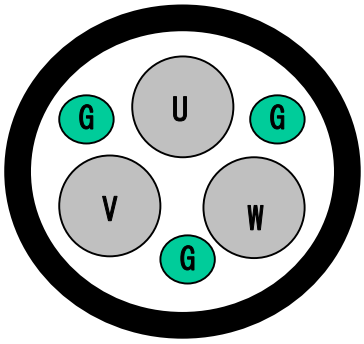

Fig. 1 Structure outline of cable

3. The method of creating cable

The procedure of creating cable is shown below.

3.1 Processing of Cable by the side of Servo Amplifier

(1) When the power line is connected by a connector

Please refer to B-65282JA/05 "FANUC SERVO AMPLIFIER alpha i series description" about the connector to servo amplifier.

Please refer to B-65262JA/03 "FANUC AC SERVO MOTOR alpha iS / alpha I series description." about the connector to motor.

① Crimp U/V/W line

Please crimp contact as the usual power line.

② Crimp ground line

(a) Put three ground lines together, and cover it with a heat contraction tube showing a ground line color.

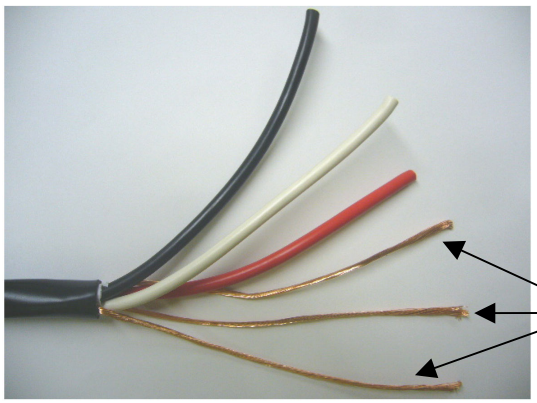

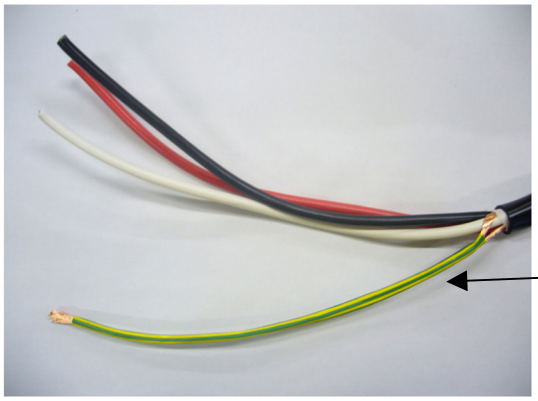

(b) Protect the exposed wire by the flame-retardant tape or a heat contraction tube.
The tape or tube needs to be 105 degrees heat-resistant and be 94-V0 flame-retardant.

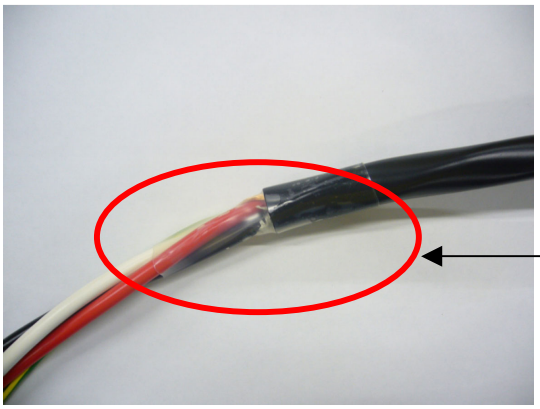

(c) Bind a flame-retardant tape around the part that a crimp contact presses down.
Because this cable does not have sheath of the ground line and a wire may be cut by a crimp contact, please be sure to protect it by a flame-retardant tape.
Since the temperature of power line becomes high, a flame-retardant tape should be used.

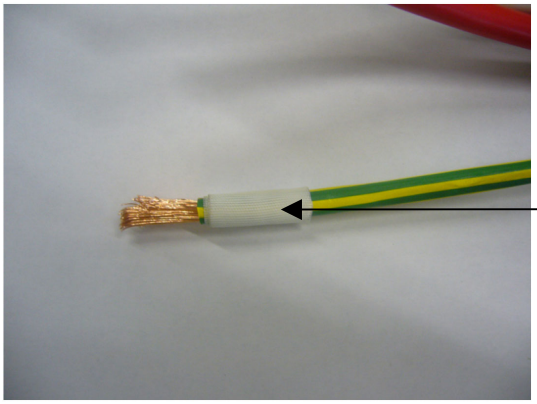

③ Insertion into housing
Please insert the crimped contact into housing.

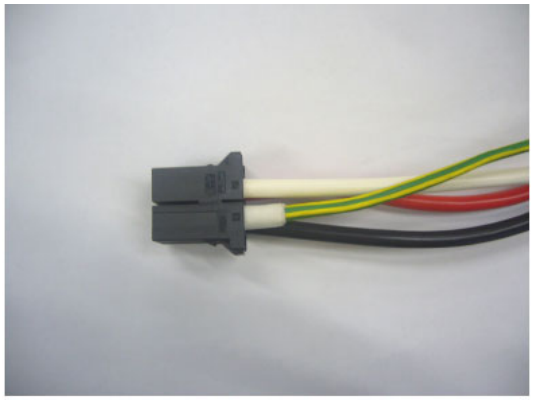

(2) When the power line is connected on a terminal block

④ Crimp U/V/W line

Please crimp contact as the usual power line.

① Crimp ground line

(a) Put three ground lines together, and cover it with a heat contraction tube showing a ground line color.

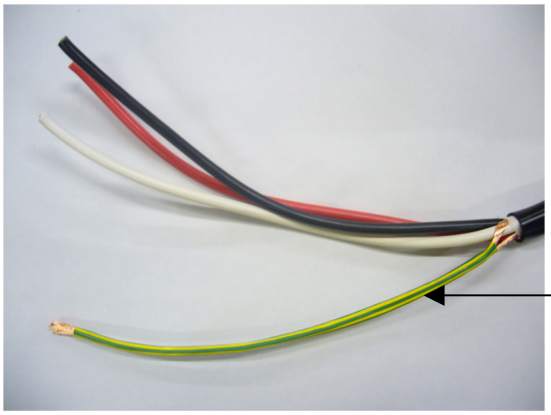

(b) Protect the exposed wire by the flame-retardant tape or a heat contraction tube. The tape or tube needs to be 105 degrees heat-resistant and be 94-V0 flame-retardant.

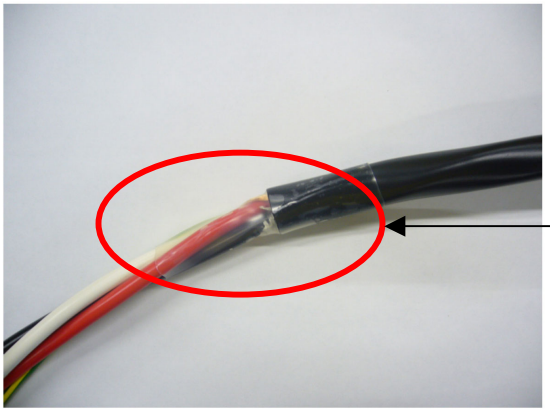

(c) Crimp three ground lines together with one crimp contact.

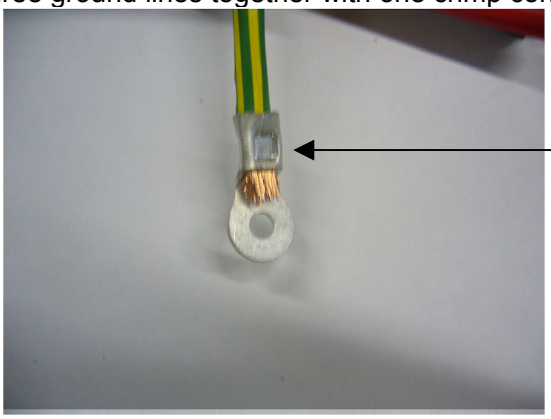

3.2 Processing of Cable by the side of motor

(1) In the case of a plug connector

(1) Soldering of U/V/W line
Solder U/V/W line as it is.

(2) Soldering of ground line
(a) Put three ground lines together, and cover it with a heat contraction tube.

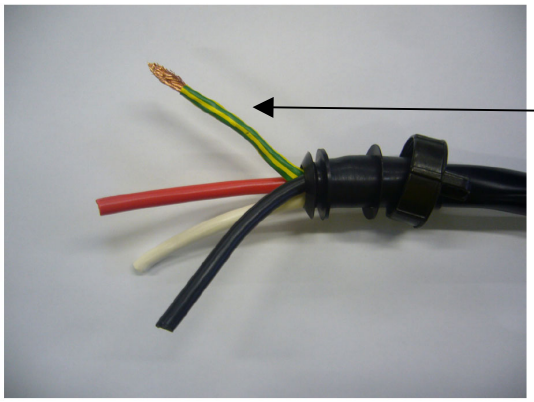

Put three lines together, and cover it with a heat contraction tube.

(b) Solder the ground line and a connector, and cover the soldered part with a heat contraction tube or flame-retardant tube.

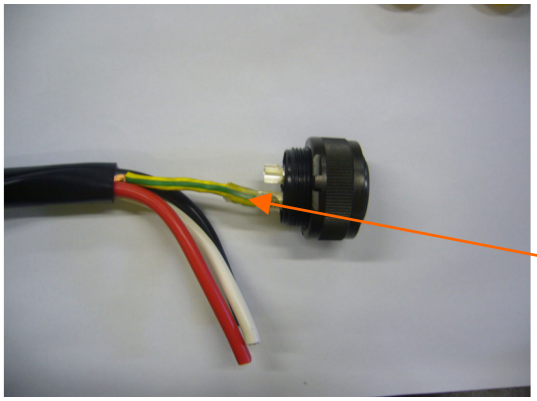

Solder a connector and cover the soldered part with a heat contraction tube

(3) Attach a case.



(2) In the case of the connector of dynamic series

① Crimp U/V/W line

Please crimp contact as the usual power line.

(2) Crimp ground line

(a) Put three ground lines together, and cover it with a heat contraction tube showing a ground line color.

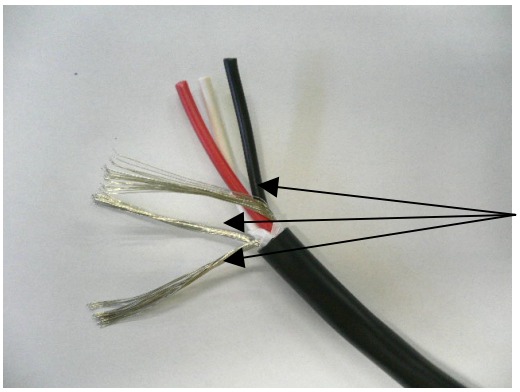

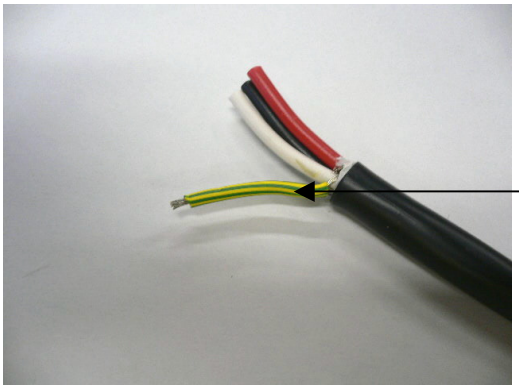

(b) Protect the exposed wire by the flame-retardant tape or a heat contraction tube. The tape or tube needs to be 105 degrees heat-resistant and be 94-V0 flame-retardant.

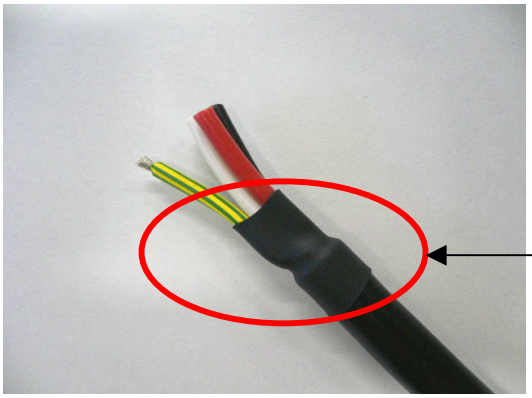

(c) Bind a flame-retardant tape around the part that a crimp contact presses down.
Because this cable does not have cover of the ground line and a wire may be cut by a crimp contact, please be sure to protect it by a flame-retardant tape.
Since the temperature of power line becomes high, a flame-retardant tape should be used.

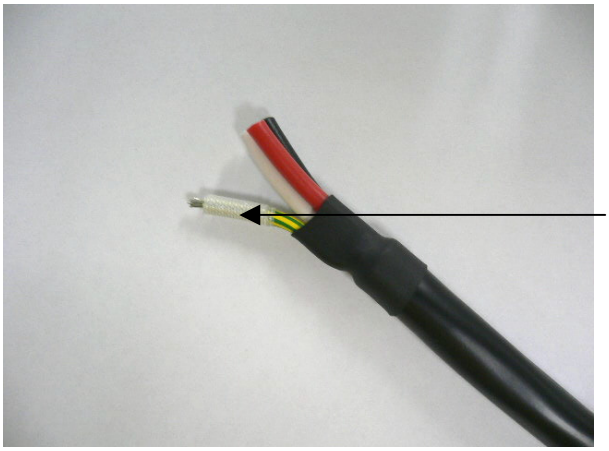

Because a wire may be cut by a crimp contact, please bind a flame-retardant tape around.

(d) Crimp a contact

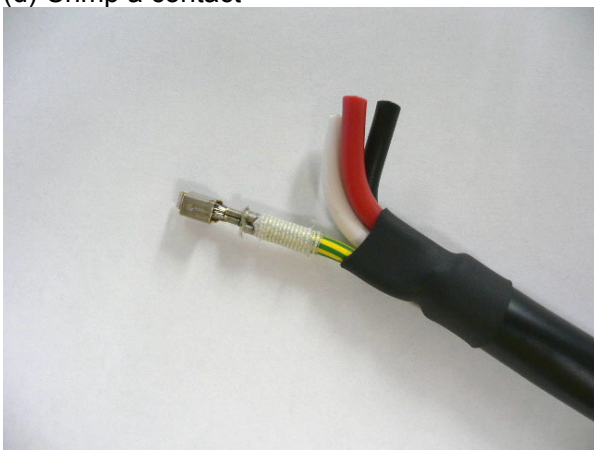

(e) Insert into housing

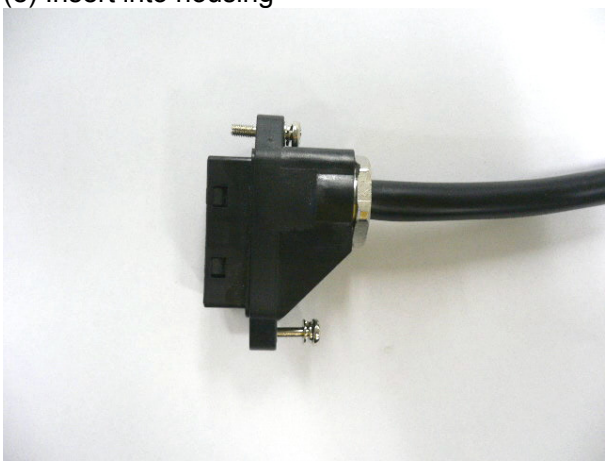

4. Cable specification details

(1) SYM 3X0.75SQ

Item		Specifications	
Core wire classification		Power line	Ground line
Nominal cross-section area (mm^2)		0.75	0.25
Conductor	Material	Stranded wire of annealed copper	Stranded wire of annealed copper
	Structure (conductors/mm)	30/0.18	10/0.18
	Size (mm)	1.2	0.66
Insulator	Material	Heat-resistant PVC	
	Color	Red, white, black	
	Thickness (mm)	0.81	
	Outside diameter (mm)	2.82	
Lay	Structure	See Fig.2	
	Binder tape	Plastics tape	
Sheath	Material	Heat-resistant, oilproof PVC	
	Color	Black	
	Display	OKI ELECTRIC CABLE AWG19 VW AWM 2501 105°C 600V VW-1 SYM 3×0.75SQ or OKI ELECTRIC CABLE(G) AWG19 VW AWM 2501 105°C 600V VW-1 SYM 3×0.75SQ	
	Outside diameter (mm)	10.3	
Finished product	Length (m)	100	
	Packing method	Bundle	
	Estimated weight (kg/km)	115	
Electrical performance	Conductor resistance (ohm/km)	24.4 or less (20 degrees)	73.4 or less (20 degrees)
	Insulation resistance (Mohm/km)	10 or more (20 degrees)	-
	Dielectric strength (V-min)	2000VAC	-
	Inductance (uH/m)	Standard 0.31	
	Capacitance (pF/m)	Standard 100	

(2) SYM 3X1.25SQ

Item		Specifications	
Core wire classification		Power line	Ground line
Nominal cross-section area (mm^2)		1.25	0.43
Conductor	Material	Stranded wire of annealed copper	Stranded wire of annealed copper
	Structure (conductors/mm)	50/0.18	17/0.18
	Size (mm)	1.5	0.86
Insulator	Material	Heat-resistant PVC	
	Color	Red, white, black	
	Thickness (mm)	0.81	
	Outside diameter (mm)	3.12	
Lay	Structure	See Fig.2.	
	Binder tape	Plastics tape	
Sheath	Material	Heat-resistant, oilproof PVC	
	Color	Black	
	Display	OKI ELECTRIC CABLE AWG19 VW AWM 2501 105°C 600V VW-1 SYM 3×1.25SQ or OKI ELECTRIC CABLE(G) AWG19 VW AWM 2501 105°C 600V VW-1 SYM 3×1.25SQ	
	Outside diameter (mm)	11.0	
Finished product	Length (m)	100	
	Packing method	Bundle	
	Estimated weight (kg/km)	140	
Electrical performance	Conductor resistance (ohm/km)	14.7 or less (20 degrees)	43.2 or less (20 degrees)
	Insulation resistance (Mohm/km)	10 or more (20 degrees)	-
	Dielectric strength (V-min)	2000VAC	-
	Inductance (uH/m)	Standard 0.28	
	Capacitance (pF/m)	Standard 110	

(3) SYM 3X2SQ

Item		Specifications	
Core wire classification		Power line	Ground line
Nominal cross-section area (mm^2)		2.0	0.75
Conductor	Material	Stranded wire of annealed copper	Stranded wire of annealed copper
	Structure (conductors/mm)	37/0.26	30/0.18
	Size (mm)	1.8	1.2
Insulator	Material	Heat-resistant PVC	
	Color	Red, white, black	
	Thickness (mm)	0.81	
	Outside diameter (mm)	3.42	
Lay	Structure	See Fig.2	
	Binder tape	Plastics tape	
Sheath	Material	Heat-resistant, oilproof PVC	
	Color	Black	
	Display	OKI ELECTRIC CABLE AWG19 VW AWM 2501 105°C 600V VW-1 SYM 3×2SQ or OKI ELECTRIC CABLE(G) AWG19 VW AWM 2501 105°C 600V VW-1 SYM 3×2SQ	
	Outside diameter (mm)	11.6	
Finished product	Length (m)	100	
	Packing method	Bundle	
	Estimated weight (kg/km)	180	
Electrical performance	Conductor resistance (ohm/km)	9.5 or less (20 degrees)	24.4 or less (20 degrees)
	Insulation resistance (Mohm/km)	Ten or more (20 degrees)	-
	Dielectric strength (V-min)	2000VAC	-
	Inductance (uH/m)	Standard 0.25	
	Capacitance (pf/m)	Standard 130	

(4) SYM 3X3.5SQ

Item		Specifications	
Core wire classification		Power line	Ground line
Nominal cross-section area (mm^2)		3.5	1.25
Conductor	Material	Stranded wire of annealed copper	Stranded wire of annealed copper
	Structure (conductors/mm)	45/0.32	50/0.18
	Size (mm)	2.6	1.5
Insulator	Material	Heat-resistant PVC	
	Color	Red, white, black	
	Thickness (mm)	0.81	
	Outside diameter (mm)	4.22	
Lay	Structure	See Fig.2	
	Binder tape	Plastics tape	
Sheath	Material	Heat-resistant, oilproof PVC	
	Color	Black	
	Display	OKI ELECTRIC CABLE AWG19 AWM 2501 105°C 600V VW-1 SYM 3×3.5SQ or OKI ELECTRIC CABLE(G) AWG19 AWM 2501 105°C 600V VW-1 SYM 3×3.5SQ	
	Outside diameter (mm)	13.2	
Finished product	Length (m)	100	
	Packing method	Drum	
	Estimated weight (kg/km)	350	
Electrical performance	Conductor resistance (ohm/km)	5.1 or less (20 degrees)	14.7 or less (20 degrees)
	Insulation resistance (Mohm/km)	10 or more (20 degrees)	-
	Dielectric strength (V-min)	2000VAC	-
	Inductance (uH/m)	Standard 0.24	
	Capacitance (pf/m)	Standard 160	

(5) SYM 3X5.5SQ

Item		Specifications	
Core wire classification		Power line	Ground line
Nominal cross-section area (mm^2)		5.5	2.0
Conductor	Material	Stranded wire of annealed copper	Stranded wire of annealed copper
	Structure (conductors/mm)	70/0.32	37/0.26
	Size (mm)	3.1	1.8
Insulator	Material	Heat-resistant PVC	
	Color	Red, white, black	
	Thickness (mm)	1.0	
	Outside diameter (mm)	5.1	
Lay	Structure	See Fig.2	
	Binder tape	Plastics tape	
Sheath	Material	Heat-resistant, oilproof PVC	
	Color	Black	
	Display	OKI ELECTRIC CABLE AWG19 AWM 2501 105°C 600V VW-1 SYM 3×5.5SQ or OKI ELECTRIC CABLE(G) AWG19 AWM 2501 105°C 600V VW-1 SYM 3×5.5SQ	
	Outside diameter (mm)	15.2	
Finished product	Length (m)	100	
	Packing method	Drum	
	Estimated weight (kg/km)	520	
Electrical performance	Conductor resistance (Ohm/km)	3.4 or less (20 degrees)	9.5 or less (20 degrees)
	Insulation resistance (Mohm/km)	10 or more (20 degrees)	-
	Dielectric strength (V-min)	2000VAC	-
	Inductance (uH/m)	Standard 0.24	
	Capacitance (pF/m)	Standard 160	

(6) SYM 3X8SQ

Item		Specifications	
Core wire classification		Power line	Ground line
Nominal cross-section area (mm^2)		8.0	2.7
Conductor	Material	Stranded wire of annealed copper	Stranded wire of annealed copper
	Structure (conductors/mm)	50/0.45	50/0.26
	Size (mm)	3.7	2.1
Insulator	Material	Heat-resistant PVC	
	Color	Red, white, black	
	Thickness (mm)	1.2	
	Outside diameter (mm)	6.1	
Lay	Structure	See Fig.2	
	Binder tape	Plastics tape	
Sheath	Material	Heat-resistant, oilproof PVC	
	Color	Black	
	Display	OKI ELECTRIC CABLE AWG19 AWM 2501 105°C 600V VW-1 SYM 3×8SQ or OKI ELECTRIC CABLE(G) AWG19 AWM 2501 105°C 600V VW-1 SYM 3×8SQ	
	Outline diameter (mm)	17.6	
Finished product	Length (m)	100	
	Packing method	Drum	
	Estimated weight (kg/km)	650	
Electrical performance	Conductor resistance (ohm/km)	2.4 or less (20 degrees)	7.1 or less (20 degrees)
	Insulation resistance (Mohm/km)	10 or more (20 degrees)	-
	Dielectric strength (V-min)	2000VAC	-
	Inductance (uH/m)	Standard 0.24	
	Capacitance (pF/m)	Standard 160	

Energy Charge Module (ECM) DESCRIPTIONS

1. Type of applied documents

Name	FANUC SERVO AMPLIFIER αi series DESCRIPTIONS
Spec. No./Ver.	B-65282EN/06-02

2. Summary of Change

Group	Name / Outline	New, Add Correct, Del	Applicable Date
Basic Function			
Optional Function	Energy Charge Module (ECM) DESCRIPTIONS	New	2008.10
Unit			
Maintenance Parts			
Notice			
Correction			
Another			

				TITLE	
				Energy Charge Module DESCRIPTIONS	
01	08.10.27	Yamada	NEW ADDED Yamada	DRAW. NO. B-65282EN/06-02	CUST.
EDIT.	DATE	DESIG.	DESCRIPTION	FANUC LTD	SHEET 1/36

- No part of this manual may be reproduced in any form.
- All specifications and designs are subject to change without notice.

- The instructions for use of Energy Charge Module are the same as that of Servo amplifier.
- Energy Charge Module should be used according to "Safety Precautions" described in the FANUC SERVO AMPLIFIER α ***i*** series DESCRIPTIONS B-65282EN.
- Users should also read the relevant description in this manual to become fully familiar with the functions of ECM.

The products in this manual are controlled based on Japan's "Foreign Exchange and Foreign Trade Law". The export from Japan may be subject to an export license by the government of Japan.
Further, re-export to another country may be subject to the license of the government of the country from where the product is re-exported. Furthermore, the product may also be controlled by re-export regulations of the United States government.
Should you wish to export or re-export these products, please contact FANUC for advice.

In this manual we have tried as much as possible to describe all the various matters.
However, we cannot describe all the matters which must not be done, or which cannot be done, because there are so many possibilities.
Therefore, matters which are not especially described as possible in this manual should be regarded as "impossible".

- When an abnormality occurs such as an alarm or a hardware failure, the operations described in the specifications are not guaranteed unless otherwise specifically noted. About a measure to abnormality, when there is a definite description, please correspond according to the description, and when there is not a description, ask our company for the measure to abnormality.
- The signals and functions described in the specifications cannot be used separately for safety functions to protect the operator from machine hazards unless otherwise they are described as being usable for the safety functions. Since it is the specification that does not expect using those signals and functions as the safety functions, there is a possibility of causing unexpected hazards. If you plan to use such signals or functions for safety functions, please contact FANUC.
- An incorrect device connection or setting may lead to an unpredictable operation. When starting to operate the machine for the first time after assembling the machine, replacing components, or modifying parameter settings, exercise the greatest care.

⚠WARNING

Protection against electric shock

(1) Protection against direct contact with charged parts

This amplifier must be installed in a power magnetics cabinet. The power magnetics cabinet must be equipped with a lock so that when the power to the amplifier is on, the power magnetics cabinet cannot be opened by persons except special maintenance personnel or persons authorized to do maintenance work who have been sufficiently trained in prevention of electric shock.

If the operator of the machine needs to open the power magnetics cabinet for some operations, the operator must be given thorough safety training, or a protection cover must be provided to prevent the operator from touching the amplifier.

(2) Confirmation of discharge of the electrolytic capacitor (UL508C 21)

This amplifier includes a large-capacity electrolytic capacitor for the power smoothing circuit. Even after the power supply input circuit is shut off, this capacitor remains charged for a while.

When it becomes necessary to touch the amplifier to do maintenance work or for other purposes, wait until the discharge time indicated on the face plate of the amplifier is passed, or start work after ensuring safety by measuring the residual voltage of the DC link section with a volt-ohm meter and checking that the LED (red) indicating charging is turned off.

(3) Isolation of the terminal of the cable

The terminals of the cables that connect to the equipment should be covered by the isolation tube etc., so that live parts should not be exposed.

Energy Charge Module (ECM) DESCRIPTIONS

Table of contents

1. Abstract ---------- 5
2. Configuration and Ordering ---------- 6
   2.1 Configuration ---------- 6
   2.2 Ordering number ---------- 7
3. Specifications ---------- 8
   3.1 Behavior of ECM ---------- 8
   3.2 Control Module ---------- 9
   3.3 Capacitor Module (For smoothing) ---------- 9
   3.4 Capacitor Module (For charge) ---------- 9
   3.5 Resistor Module ---------- 10
   3.6 DC Reactor ---------- 10
   3.7 Continuous output power of the motor connected to ECM ---------- 10
4. Selection ---------- 11
   4.1 The maximum instantaneous power of the machine ---------- 11
   4.2 Limit of the maximum instantaneous power of the machine ---------- 12
   4.3 Selection of Capacitor Module ---------- 15
   4.4 Setup of ECM ---------- 17
5. Functions and Interface ---------- 18
   5.1 Interfaces with Servo amplifier ---------- 18
   5.2 Interfaces with PMC (I/O) ---------- 19
   5.3 Alarm and status display ---------- 20
6. Outline and Panel cut ---------- 21
   6.1 Control Module (A06B-6158-H010) ---------- 23
   6.2 Capacitor Module (A06B-6158-H020) ---------- 24
   6.3 Resistor Module (A06B-6158-H030) ---------- 25
   6. 4 DC Reactor (A06B-6158-H040) ---------- 26
7. Connection ---------- 27
   7.1 Connection diagram ---------- 27
   7.2 Cable connection details ---------- 28

1. Abstract

The use of servo motors for driving industrial machines reduces an average electric power consumption compared with hydraulic driving, thereby contributing to energy saving. On the other hand, the peak power increases at acceleration and deceleration, which causes larger fluctuation in power source voltage, sometimes requiring the electrical facilities capacity to be increased.

Energy Charge Module reduces large power source current at the peak of electric power consumption, and reduces voltage fluctuation of electrical facilities.

FEATURES

- Assists power running energy during motor acceleration and recharges regenerated energy during motor deceleration to reduce voltage fluctuation of the electrical facilities.
- Supplies only a portion of electric power which exceeds the electricity level of the electrical facilities capacity from Energy Charge Module at acceleration, and limits the capacity of the capacitor to minimum in combination with Power Source Regeneration Function at regeneration.
- Added with various types of alarm detection functions and discharging and protection circuits for capacitor, to secure safety as the capacitor is charged with large energy.

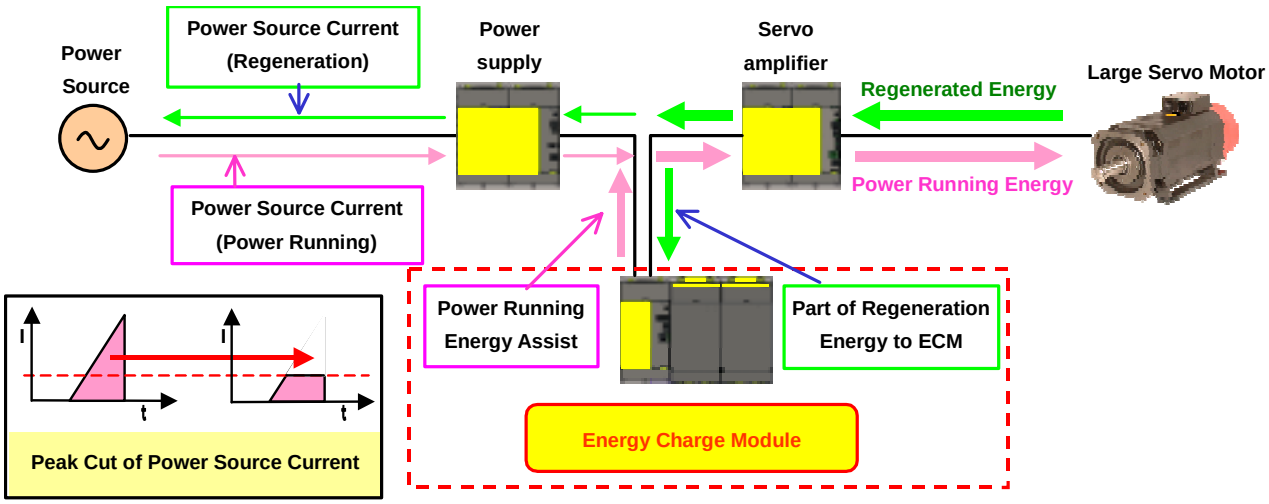

				TITLE	
				Energy Charge Module DESCRIPTIONS	
				DRAW. NO. B-65282EN/06-02	CUST.
EDIT.	DATE	DESIG.	DESCRIPTION	FANUC LTD	SHEET 5/36

2. Configuration and Ordering

2.1 Configuration

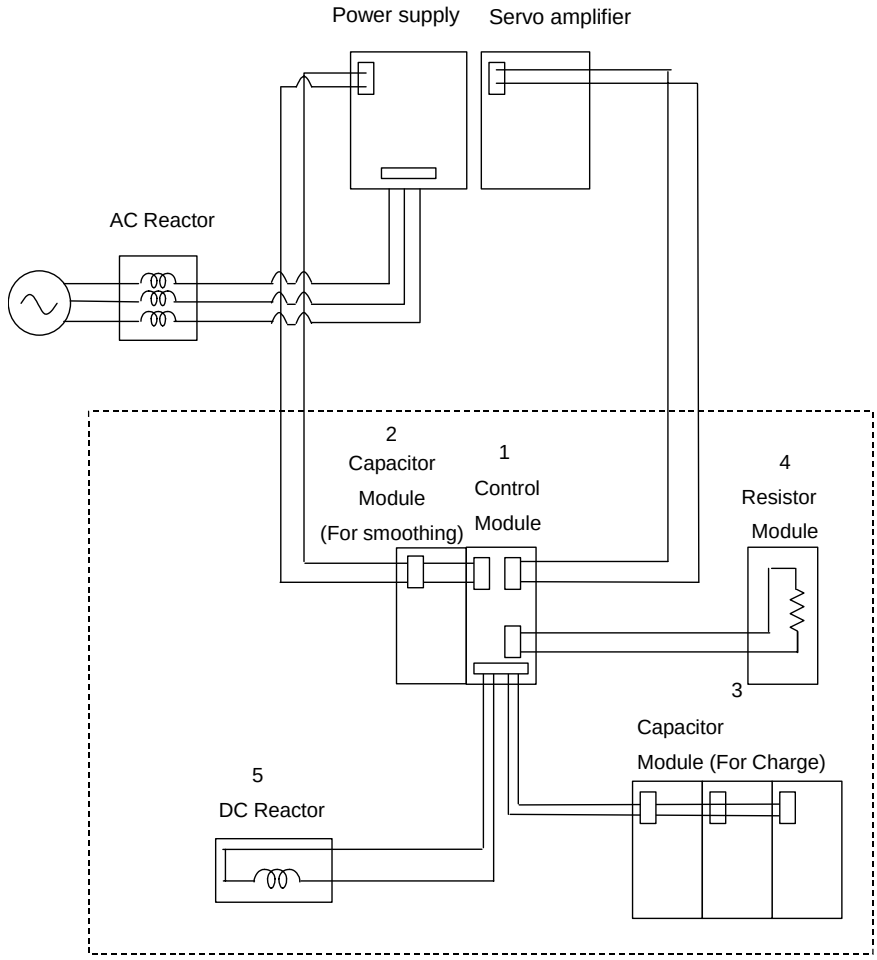

NO.	Name	Functions
1	Control Module	Controlling charge/discharge of Capacitor Module
2	Capacitor Module (For smoothing)	Smoothing input/output current of Control Module
3	Capacitor Module (For charge)	Charging energy
4	Resistor Module	Resistor to discharge Capacitor Module at Emergency stop
5	DC Reactor	For controlling charge/discharge current

2.2 Ordering number

2.2.1 Basics

Category	Name	Ordering number	Remarks
Standard	Control Module	A06B-6158-H010	
Standard	Capacitor Module	A06B-6158-H020	
Standard	Resistor Module	A06B-6158-H030	
Standard	DC Reactor	A06B-6158-H040	Continuous current: 100Arms

2.2.2 Short bar, Connector

[Short bar]

Category	Name	Ordering number	Remarks
Optional	Short bar	A06B-6110-K504	K1、K2 The short bar must be attached to DC link terminal of Power supply (300mm) width and Servo amplifier (300mm).
Optional	Short bar	A06B-6078-K804	K3 The connection between "DC link of Control Module" and "Capacitor Module (for smoothing)"
Optional	Short bar	A06B-6078-K800	K5 Connection between "Capacitor Modules (for charge)"

[Connector]

Category	Name	Ordering number	Remarks
Optional	Connector	A06B-6110-K505	K6、K7 Connection between "Control Module" and "Resistor Module"
Optional	Connector	A06B-6110-K210	K21 Connection of the interface signal between "Servo amplifier" and a "Control Module"
Optional	Connector	A06B-6110-K506	K22 Connection between "Control Module" and "The break signal of the fuse in Capacitor Module"
Optional	Connector	A06B-6130-K202	K23 Dummy connector for the termination of the break signal of the fuse.
Optional	Connector	A06B-6110-K508	K24 Connection of the interface signal between a "Control Module" and "I/O"

3. Specifications

3.1 Behavior of ECM

(1) Energy supplies the Capacitor Module of ECM from power source after the Power supply is ready. (Pre-charge)

(2) When the power that the Servo amplifier requires exceeds the level set as ECM, ECM assists the energy for the power running.

(3) The regeneration energy is stored in the Capacitor Module of ECM. The regeneration energy regenerates to the electrical facilities after the Capacitor Module is fully charged.

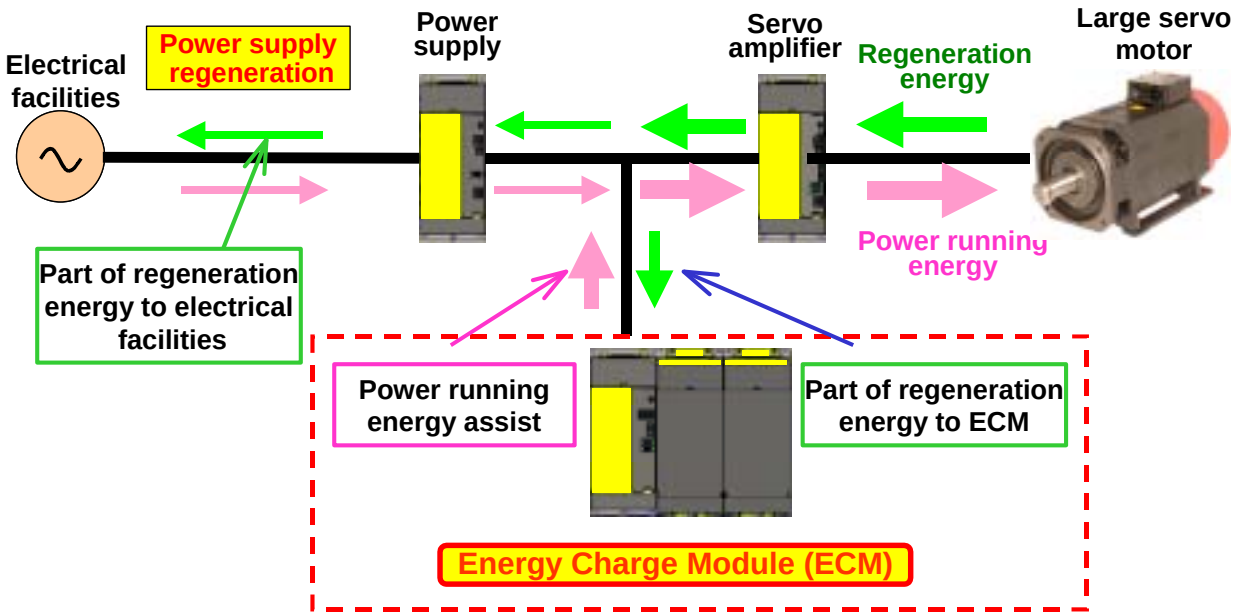

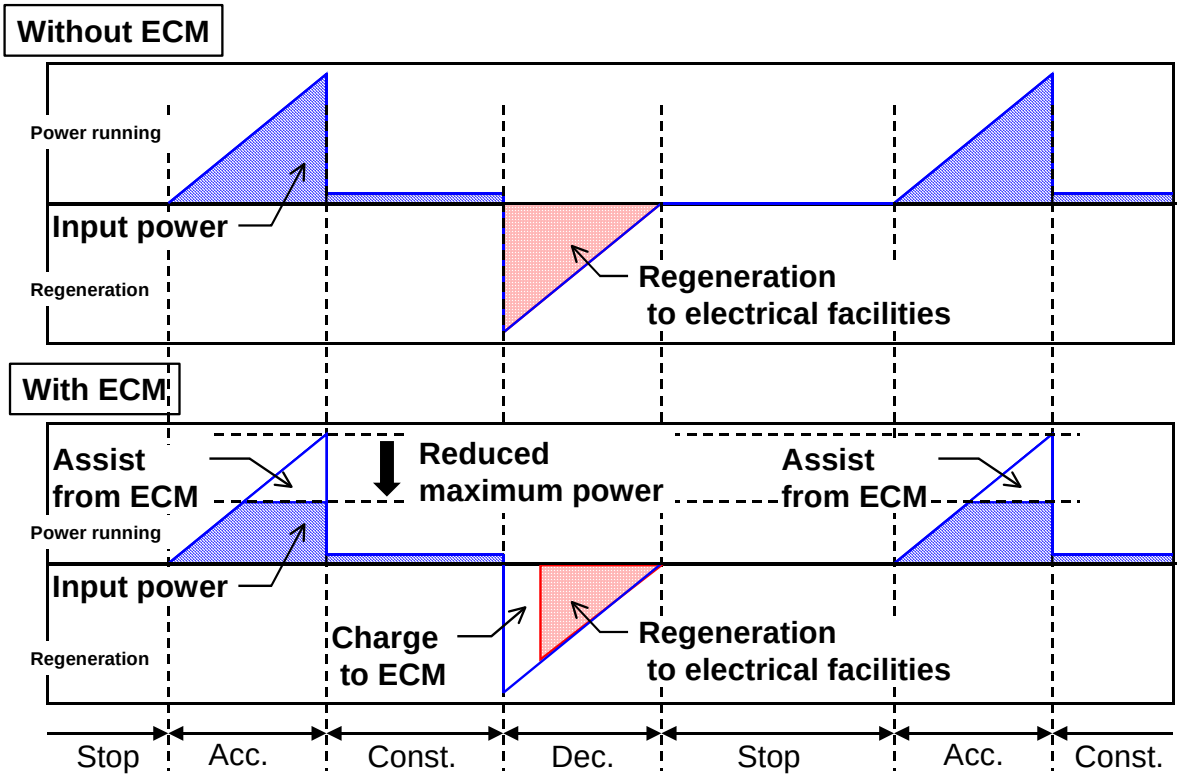

				TITLE	
				Energy Charge Module DESCRIPTIONS	
				DRAW. NO. B-65282EN/06-02	CUST.
EDIT.	DATE	DESIG.	DESCRIPTION	FANUC LTD	SHEET 8/36

This Energy Charge Module is equipment applicable to SERVO AMPLIFIER of 400V input series.
The specification of the following units is explained.

Item	Name	Functions
3.2	Control Module	Controlling charge/discharge of Capacitor Module
3.3	Capacitor Module (For smoothing)	Smoothing input/output current of Control Module
3.4	Capacitor Module (For charge)	Charging energy
3.5	Resistor Module	Resistor to discharge Capacitor Module at Emergency stop
3.6	DC Reactor	For controlling charge/discharge current

3.2 Control Module

Control Module controls the current from Capacitor Module.

Item	Specifications
Maximum output	(1) 120kW (2) 90kW
Continuous output	6kW or less Note)
Maximum connection number of Capacitor Module (for charge)	(1) 120kW: Up to 10 (2) 90kW: Up to 8
Continuous output of motor	55kW or less
Maximum stored energy	About 11 kJ
Limit of input Power supply current	Refer to section 4.4
Protection functions	Refer to section 5.3 (Fuse, Over current, Over Voltage, etc)

Note) For example, in case of the energy supply per one time is 100kW during 100msec, 36 energy supplies are possible in 1 minute. In case of the energy supply per one time is 50kW during 50msec, 144 energy supplies are possible in 1 minute.

Example)

(1) Maximum output 120kW

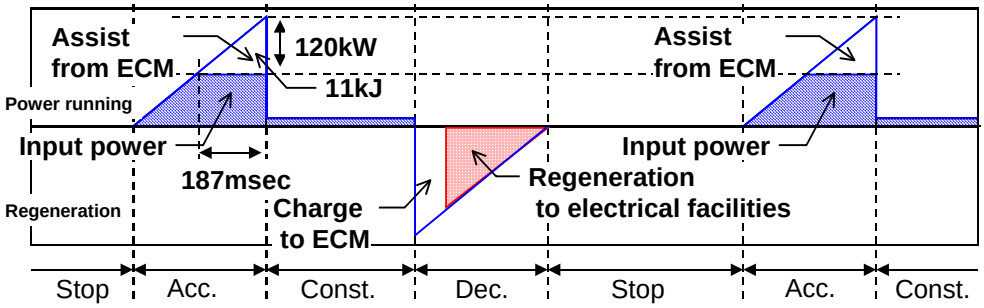

(2) Maximum output 90kW

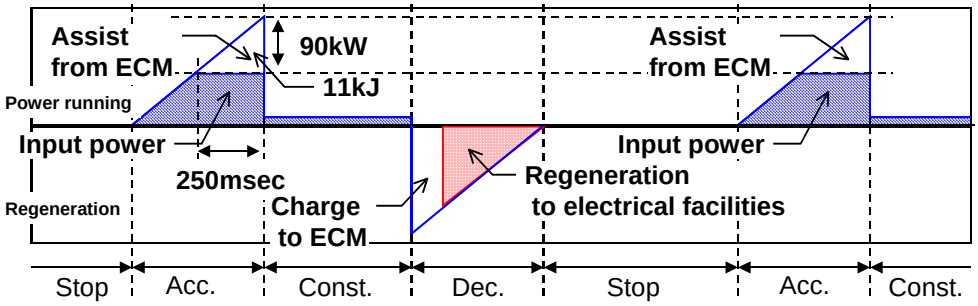

3.3 Capacitor Module (For smoothing)

It is the capacitor that smoothes the current. It is installed between Control Module and Power supply.

Item	Specifications
Capacitance	0.011F
Fuse built-in	Circuit is interrupted with fuse.
The number to be used	1

3.4 Capacitor Module (For Charge)

It is the capacitor to charge energy. The regeneration energy is charged in Capacitor Module at deceleration and the power running energy is assisted the by the charged energy at acceleration.

As for the selection of the number of Capacitor Module, please refer to section 4.1.

Item	Specifications
Capacitance	0.011F
Protection	Circuit is interrupted with fuse.
The number of discharge (at maximum output)	• The number of acc/dec: 50 million times or more Note) • The number of ESP: 1 million times or more

Note) If the number of acc/dec is required 50 million times or more, please inquire to our company.

3.5 Resistor Module

It is the resistor in order to discharge the energy of Capacitor Module at ESP or Alarm.

Item	Specifications
Resistance	30 ohm
Discharge time	about 20 seconds (In case of the number of Capacitor Module is 10)
Charge time	about 5 seconds (In case of the number of Capacitor Module is 10)
Protection	The thermostat in Resistor Module detects abnormal heat generation.
The number to be used	1
The number of discharge	1 million times or more Conditions: one discharge in 5 minutes

3.6 DC Reactor

It is DC Reactor in order to smooth the charge and discharge current.

Item	Specifications
Continuous current	100Arms

4. Selection

Selection of the number of Capacitor Module (for charge) and the setup of the switch of the energy supply start level from ECM are explained.

[The selection procedure of ECM]

Order	Contents	Reference
(1)	Confirm the maximum instantaneous power and the power pattern of the machine.	4.1
(2)	Limit of the maximum instantaneous power of the machine is estimated according to the specification of the machine or permissible maximum instantaneous power of the electrical facilities.	4.2
(3)	The number of Capacitor Module (for charge) is selected according to (1) and (2).	4.3
(4)	The level of the energy supply from ECM is set up with the setting switch on ECM so that the power from a power source is less than the permissible maximum instantaneous power. (At the time of mechanical installation)	4.4

4.1 The maximum instantaneous power and the power pattern of the machine (Order (1))

- The output of the motor can be calculated with multiplication of the torque and the speed of the motor.

  In the case of the existing machine, it can be calculated by measuring the torque and speed of the motor.
  In the case of the machine is being designed, it can be calculated according to the specification of the motor, the inertia of the machine and the operating conditions of the machine.
  The output of the motor (W) = the speed of the motor (rad/s) x the torque of the motor (Nm)

- The loss of the amplifier and the motor is not included in the output of the motor. Therefore the power from the power source and ECM is as the output of the motor x 1.2
  The power from the power source (W)= the output of the motor (W) x 1.2

- The maximum instantaneous power of the machine is the sum total of the maximum instantaneous power of the motor and the power of the other equipment installed in the machine.

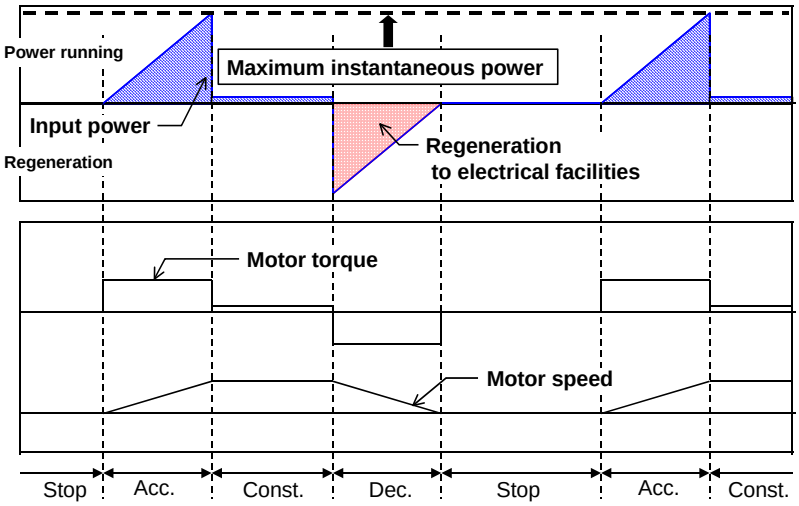

4.2 Limit of the maximum instantaneous power of the machine (Order (2))

Limit of the maximum instantaneous power of the machine is estimated according to the specification of the machine or permissible maximum instantaneous power of the electrical facilities.

[The calculation method of the permissible maximum instantaneous power of the electrical facilities]

- The power company regulates the voltage drop ratio in the receiving point of the power system because the voltage drop may affect the neighboring equipment when the customer uses maximum instantaneous power.
  Since each power company decides the regulation of the voltage drop ratio, please ask the power company.
- Please check the voltage drop ratio in the receiving point of the power system when the customer uses maximum instantaneous power. If it is more than the regulation of the voltage drop ratio of the power company, the customer needs to improve the voltage drop ratio.
- The calculation method of the voltage drop ratio in the receiving point and the permissible maximum instantaneous power of the electrical facilities are described as follows.

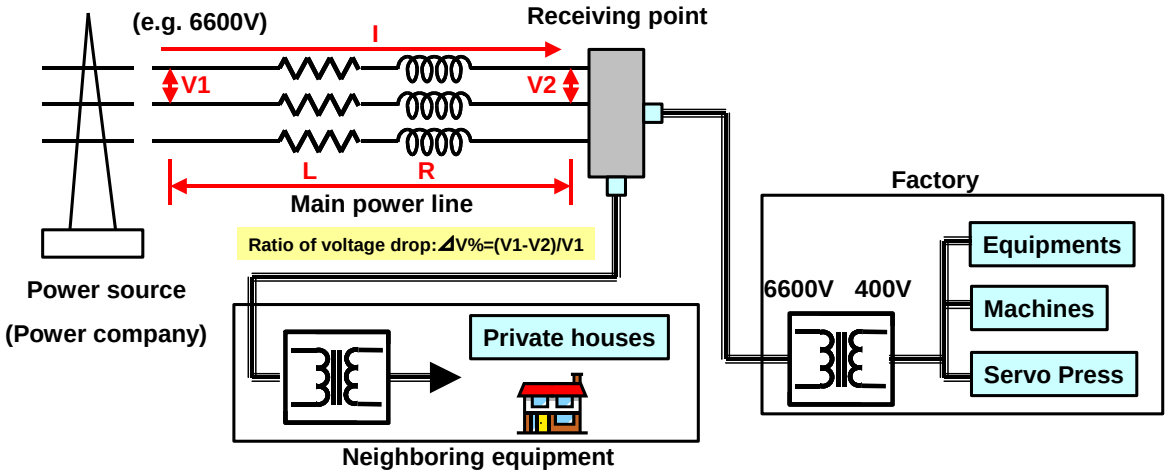

Note 1)
Please ask to electric power company about the impedance of a power line.

Note 2)
Generally, the voltage drop ratio depends on the impedance of the power line between the receiving point from the power supply of the power company. But if the impedance of the power supply of the power company cannot be disregarded, the voltage drop ratio should be calculated with the impedance is added to that of a power line.

[Calculation method (1)]

Sign	Item	Unit	Remarks
V1	Line Voltage	Vrms	Line Voltage with no load
V2	Voltage at receiving point	Vrms	Voltage at the receiving point with load
I	Max. current	Arms	Current when the machine output Max. power
R	Resistance	ohm	Resistance of main power line
X	Reactance	ohm	Reactanceof main power line (X [ohm]=jωL [H])
cosφ	Power factor	-	When unknown, please give as 0.9 as a standard.
sinφ	-	-	When unknown, please give as 0.4 as a standard.

- The ratio of voltage drop (⊿V%) is calculated with the value of the above table.

  $\Delta V\% = (V1-V2)/V1 = \{I \times (R\times\cos\phi + X\times\sin\phi)/(V1/\sqrt{3})\}\times 100$ [%]

- If the ratio of voltage drop (⊿V%) is less than the regulation of an electric power company, the countermeasure is unnecessary.
- If the ratio of voltage drop (⊿V%) is more than the regulation of an electric power company, calculate the permissible maximum instantaneous power by the following formula.

  Permissible maximum instantaneous power $= V1^2 \times \Delta V\% / \{(R\times\cos\phi + X\times\sin\phi)\times 100\}$ [VA]
- It is necessary that the maximum instantaneous power of the machine is less than the permissible maximum instantaneous power.

Example of calculation)

Conditions

Sign	Item	Value
V1	Line Voltage	6600Vrms
I	Max. current	306Arms
R	Resistance	0.87ohm
X	Reactance	2.18ohm
cosφ	Power factor	0.9
sinφ	-	0.4

(1) Calculation of the ratio of voltage drop (⊿V%)

$\Delta V\% = \{306 \times (0.87 \times 0.9 + 2.18 \times 0.4) / (6600/\sqrt{3})\} \times 100$ [%]

$= 13.3$ [%]

(2) Calculation of the permissible maximum instantaneous power

The permissible ratio of voltage drop is 4.2%

Permissible maximum instantaneous power $= 6600^2 \times 4.2 / \{(0.87 \times 0.9 + 2.18 \times 0.4) \times 100\}$ [VA]

$=$ 1105 [kVA]

$=$ 1227 [kW] (Power factor:0.9)

[Calculation method (2)]

Sign	Item	Unit	Remarks
Po	Max. output power	kVA	Max. output power of machine
%R	% Resistance	%	% Resistance of power line
%X	% Reactance	%	% Reactance of power line
P	Basic capacity of power source	MVA	Basic capacity of %L and %R
$\cos\phi$	Power factor	-	When unknown, please give as 0.9 as a standard.
$\sin\phi$	-	-	When unknown, please give as 0.4 as a standard.

- The ratio of voltage drop ($\triangle$V%) is calculated with the value of the above table.

  $\triangle V\% = Pox(\%R \times \cos\phi + \%X \times \sin\phi) \times 10^{-4}$ [%] (Condition: P=10MVA)

- If the ratio of voltage drop ($\triangle$V%) is less than the regulation of an electric power company, the countermeasure is unnecessary.
- f the ratio of voltage drop ($\triangle$V%) is more than the regulation of an electric power company, calculate the Permissible maximum instantaneous power by the following formula.

  Permissible maximum instantaneous power = $\triangle V\% / \{(\%R \times \cos\phi + \%X \times \sin\phi) \times 10^{-4}\}$ [kVA]
- It is necessary that the maximum instantaneous power of the machine is less than the permissible maximum instantaneous power.

Example of calculation)

Conditions

Sign	Item	Value
Po	Max. output power	3500kVA
%R	% Resistance	20%
%X	% Reactance	50%
P	Basic capacity of power source	10MVA
$\cos\phi$	Power factor	0.9
$\sin\phi$	-	0.4

(1) Calculation of the ratio of voltage drop ($\triangle$V%)

$\triangle V\% = 3500 \times (20 \times 0.9 + 50 \times 0.4) \times 10^{-4}$ [%]

$= 13.3$ [%]

(2) Calculation of the permissible maximum instantaneous power

The permissible ratio of voltage drop is 4.2%

Permissible maximum instantaneous power $= 4.2 / \{(20 \times 0.9 + 50 \times 0.4) \times 10^{-4}\}$ [VA]

$= 1105$ [kVA]

$= 1227$ [kW] (Power factor:0.9)

4.3 Selection of Capacitor Module (Order (3))

The energy assisted from ECM is calculated and the number of a Capacitor Module is selected.

> The energy assisted from ECM (J) < the energy stored in one capacitor module x N (J)
>
> N: The number of a capacitor module

[The energy assisted from ECM]

The energy assisted from ECM is calculated from the maximum instantaneous power of the machine (4.1) and the permissible maximum instantaneous power (4.2). The energy assisted from ECM is the area of the portion beyond the level of the permissible maximum instantaneous power.

The instant maximum power from the power source cannot be made smaller than " the maximum instantaneous power of the machine -the maximum output of ECM".

For example, the energy assisted from ECM is calculated by the following formulas in the following figure.

The energy assisted from ECM (J) = 0.5xT(sec) x (the maximum instantaneous power of the motor(w) - the permissible maximum instantaneous power(w))

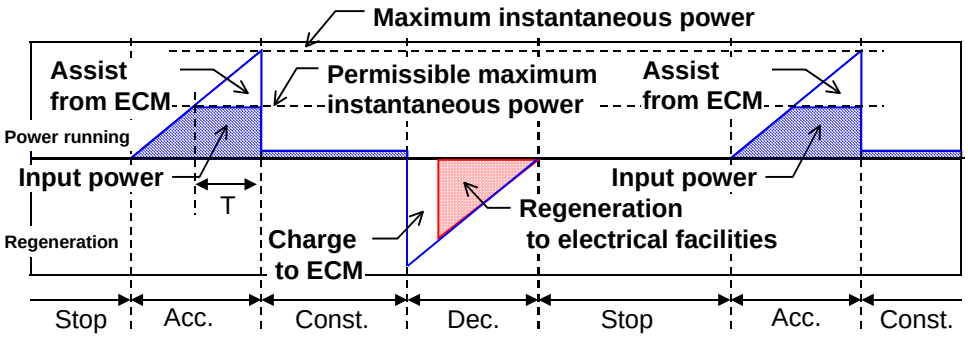

[Stored energy per a Capacitor Module]

(1) Maximum output 120kW

Power source voltage	400 V	420 V	440 V	460 V	480 V
Stored energy	1024 J	1087 J	1149 J	1211 J	1273 J

Note : $Pc = 0.5 \times 0.011F \times [V_norm^2 - (V_norm - 200V)^2]$ J

Pc : Stored energy per a Capacitor Module

V_norm: Power source voltage $\times \sqrt{2}$

(2) Maximum output 90kW

Power source voltage	400 V	420 V	440 V	460 V	480 V
Stored energy	1372 J	1465 J	1558 J	1652 J	1745 J

Note : $Pc = 0.5 \times 0.011F \times [V_norm^2 - (V_norm - 300V)^2]$

Example of calculation)

Conditions

Item	Value
Maximum instantaneous power	100kW
Permissible maximum instantaneous power	50kW
Time: T	0.2sec

The energy assisted from ECM (J)=0.5 x 0.2(sec) x (100(kW)-50(kW))

=5000 (J)

Maximum output 120kW :120kW or less, Power source voltage:400V

5000 (J)< 1024 (J) x 5

5 Capacitor Modules (for charge) are required.

4.4 Setup of ECM (Order (4))

- The level of the energy supply from ECM is set up with the setting switch on ECM so that the power from a power source is less than the permissible maximum instantaneous power.
- When the output of the motor exceeds a setting level, the power from a power source is limited by the energy assisted from ECM.
- Setting levels are 16 levels. Setting levels are set by a 4-bit switch.

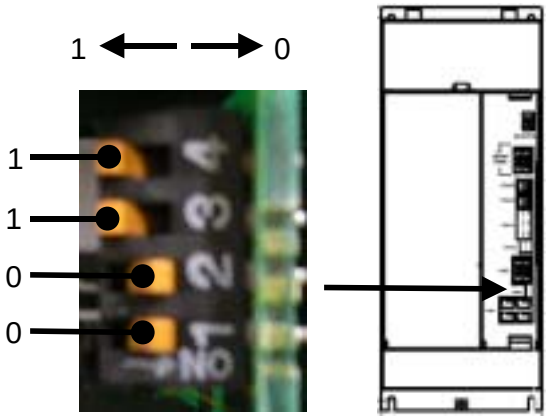

- The limit value of the power from the power source in each setting level is shown in the following table.

Setup	4	3	2	1	Power source current (Arms)	Limit value of the power from the power source (kW) The inside of ( ) is power source voltage. (400V)	(440V)	(480V)
0001	ON	ON	ON	OFF	42	26	29	31
0010	ON	ON	OFF	ON	45	28	31	34
0011	ON	ON	OFF	OFF	50	31	34	38
0100	ON	OFF	ON	ON	54	34	37	40
0101	ON	OFF	ON	OFF	57	35	39	42
0110	ON	OFF	OFF	ON	66	41	45	49
0111	ON	OFF	OFF	OFF	73	45	50	54
1000	OFF	ON	ON	ON	82	51	56	62
1001	OFF	ON	ON	OFF	88	55	61	66
1010	OFF	ON	OFF	ON	99	62	68	74
1011	OFF	ON	OFF	OFF	113	70	77	85
1100	OFF	OFF	ON	ON	128	80	88	96
1101	OFF	OFF	ON	OFF	143	89	98	107
1110	OFF	OFF	OFF	ON	161	100	110	120
1111	OFF	OFF	OFF	OFF	176	110	121	131

Note) The value of a table is not guaranteed.

At the time of machine installation, please measure power source current or power, and set the switch.

5. Functions and Interface
5.1 Interfaces with Servo amplifier

- ECM receives an emergency stop signal and the ready signal of the Power supply(PS) by the communication between modules.

[Operation of ECM]

- When the Power supply has been ready.
  (1) The ECM has been ready after completing the charge to the Capacitor Modules.
  (Charge time: about 5 second)
- In case of "Emergency stop which is input from CNC"
  (1) The functions of ECM stop.
  (The current between ECM and Servo amplifier is intercepted.)
  (2) The energy of Capacitor Modules (for charge) is discharged.
  (Discharge time: about 20 seconds)
- In case of "Emergency stop which is input to the Power supply(connector CX4) "
  (1) The functions of ECM stop.
  (The current between ECM and Servo amplifier is intercepted.)
  (2) The energy of Capacitor Modules (for charge and smoothing) and capacitors of Servo amplifiers is discharged. (Discharge time: about 20 seconds)

Note)

- The charge and discharge time of Capacitor Modules are time when ten Capacitor Modules are connected.
- The Capacitor Modules are not discharged when the discharge circuit of the Control Module malfunctions.

⚠ WARNING)

- The contactor (MCC) for the Power supply should be OFF during Emergency Stop.

  If the contactor is not OFF, the current from power source flows into Resistance Module, and Resistance Module is overheated abnormally.

- Even if the red LED that indicates charging is not lit, before starting the replacement work or wiring work and so on, please ensure that the power source is disconnected by the breaker and the voltages of DC links of the Control Module, the Capacitor Modules (for smoothing and charge), Resistor Module, DC Reactor, the Power supply and the Servo amplifier are falling. As for the voltage of DC link, measure the voltage of the terminal of DC link of each unit by the voltmeter (Tester etc.).

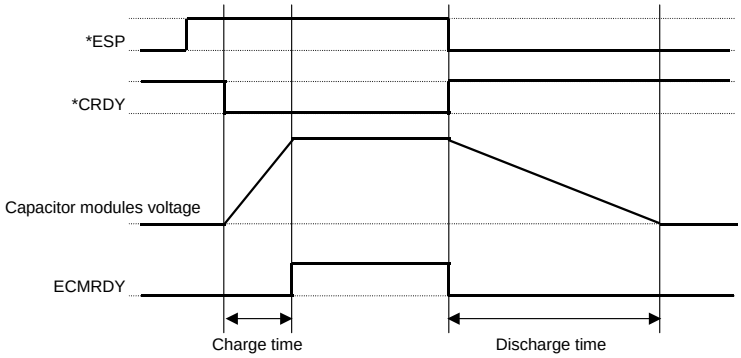

Signal name	Note
*ESP	Emergency stop signal (L: Emergency stop, H: Emergency stop release)
*CRDY	Ready signal of the Power supply (L: Ready, H: Not ready)
ECMRDY	Ready signal of ECM (L: Not ready, H: Ready)

5.2 Interfaces with PMC (I/O)

- The control signal (CX41) of the Control Module is connected to I/O.

  (Refer to 7.2.9 Cable K24 about the details of connection)

- The status of ECM is sent to PMC from ECM via I/O and the control signal of ECM is sent to ECM from PMC via I/O.

[The signals which communicate the status of ECM from ECM to PMC]

(1) Ready signal (ECMRDY)
It is a signal for communicating that ECM has been ready.
ECM has been ready within 10 seconds after emergency stop release.

(2) Status signal (ST 1B, ST2B)
It is the 2-bit signal which communicate the status of ECM. (Refer to 5.3 Alarm and status display)

(3) Alarm code (ALM*B)
It is the 4-bit signal which shows the kind of alarm. (Refer to 5.3 Alarm and status display)

[The signal for controlling ECM from PMC to ECM]

(1) Discharge mask signal (DCMASK)
The discharge mask signal can inhibit to discharge the energy of Capacitor Modules by the Resistor Module. In case of the emergency stop is frequently, this signal is available.

(2) Supply mask signal (SPSTP)
The supply mask signal can inhibit to supply the energy from ECM in the period that does not need to supply the energy from ECM. The energy in the Capacitor Modules can be used by this signal when the energy is required, and the quantity of a Capacitor Module can be reduced.

Signal name	The meaning of signal	The state of signal Note)	
		L	H
ECMRDY	Ready signal	Not ready	Ready
ST1B, ST2B	Status signal	Refer to 5.3 Alarm and status display	
ALM*B	Alarm code	Refer to 5.3 Alarm and status display	
DCMASK	Discharge mask signal	Enabling to discharge	Inhibiting to discharge

Note)

- The output signal from ECM is a high side switch circuit. When a high side switch turns off, it is necessary to set a signal level to L. Therefore, please use the circuit that the pull down resistor is connected as an input circuit of I/O.
- Please use the output circuit with a high side switch as an output circuit of I/O for DCMASK.
- In the case of the emergency stop by the emergency stop signal inputted into Power supply, Capacitor Modules are discharged even if the discharge mask signal is input.

5.3 Alarm and status display

- When alarm occurs in ECM, the function of ECM stops. (The current between ECM and Servo amplifier is intercepted.)
- Even if alarm occurs in ECM, ECM cannot stop Servo amplifiers and motors. Therefore, the rudder program of PMC is created from the status signal communicate to I/O from ECM in order to stop the machine.

[The status display of ECM]

- The status of ECM is displayed on LED of ECM.

Classification	LED display	State	Note
Normal	-	Not ready	
	0	Ready, Operating	
	Right-handed rotation	Under charging	
	Left-handed rotation	Under discharging	
Alarm	1	Over-current at power running	Over-current of DC link current at power running
	2	Over-current at regeneration	Over-current of DC link current at the time of regeneration
	3	Over-current of charge current	Over-current of charge current to Capacitor Modules
	4	Over-current of discharge current	Over-current of discharge current from Capacitor Modules
	5	Low-voltage of control power supply	Low-voltage of control power supply (24V)
	6	Over-voltage of DC link	Over-voltage of DC link of Servo amplifier
	7	Over-voltage of Capacitor Module	
	8	Low-voltage of Capacitor Module	
	9	Over-heat of Control Module	Detected by the thermostat on the heat sink
	C	Alarm of Power supply	Alarm occurs in the Power supply
	E	Abnormal charge of Capacitor Module	Capacitor Modules are not charged.
	F	Resistor Module Abnormal discharge (1)	Capacitor Modules are not discharged.
	H	Resistor Module Abnormal discharge (2)	Capacitor Modules are discharged by malfunction of the discharge circuit.
	J	Over-heat of Resistor Module	Detected by the built-in thermostat
	P	Communication error	Communication between modules error
	b	Current control circuit malfunction	The circuit to control the current of ECM malfunctions.
	h	Fuse blowing	The fuse of the Capacitor Module is blown.
Warning	A	Cooling fan stop (Refer to Note 1)	The cooling fan stop for the heat sink of the Control Module.
	U	Energy supply stop	Potential difference of a capacitor module is more than 300V.

Note 1)
In case of the cooling fan stop occurs, although ECM works continuously, please exchange the cooling fan a little early. Depending on ambient air temperature or the operating condition of ECM, the life of parts of the Control Module becomes short, or over-heat of Control Module may occur.

[Operations when alarm occurs]

- When the alarm occurs in ECM, the status signal is communicated to I/O from ECM.
- The status signal ST1B changes from "H" to "L" when the alarm occurs. After ST1B changes from "H" to "L", please check the status signal ST1B and ST2B.
- Please stop the machine according to a status signal.

The stop method of the machine when alarm occurs

Status signal		Status	Stop method of the machine
ST2B	ST1B		
H	H	Normal	-
H	L	Abnormality occurred in ECM.	(1) The machine is stopped after moving to a safe position. (2) After (1), the machine should be stopped immediately by the emergency stop and the external MCC of the Power supply should be opened.
L	L	Serious abnormality occurred in ECM.	(1) The machine should be stopped immediately by the emergency stop and the external MCC of the Power supply should be opened.

* When a cable is disconnected, the signal to I/O is set to "L".

The status signal of ECM

Classification	LED display	Status	Status signal	
			ST2B	ST1B
Normal	-	Not ready	H	H
	0	Ready, Operating	H	H
	Right-handed rotation	Under charging	H	H
	Left-handed rotation	Under discharging	H	H
Alarm	1	Over-current at power running	L	L
	2	Over-current at regeneration	L	L
	3	Over-current of charge current	L	L
	4	Over-current of discharge current	L	L
	5	Low-voltage of control power supply	L	L
	6	Over-voltage of DC link	L	L
	7	Over-voltage of Capacitor Module	L	L
	8	Low-voltage of Capacitor Module	H	L
	9	Over-heat of Control Module	H	L
	C	Alarm of Power supply	H	L
	E	Abnormal charge of Capacitor Module	H	L
	F	Resistor Module Abnormal discharge (1)	H	L
	H	Resistor Module Abnormal discharge (2)	H	L
	J	Over-heat of Resistor Module	H	L
	P	Communication error	H	L
	b	Current control circuit malfunction	H	L
	h	Fuse blowing	H	L
Warning	A	Cooling fan stop (Refer to Note 1)	H	L
	U	Energy supply stop	H	L

[Alarm code]

- When the alarm occurs in ECM, the alarm code is communicated to I/O from ECM.
- The status signal ST1B changes from "H" to "L" when the alarm occurs. After ST1B changes from "H" to "L", please check the alarm codes.
- Please use the alarm code in order to display the kind of alarm to a monitor etc..
  It makes maintenance easy.

Alarm code				Alarm
ALM8B	ALM4B	ALM2B	ALM1B	
L	L	L	L	No alarm
L	L	L	H	Over-current at power running Over-current at regeneration
L	L	H	L	Over-current of charge current Over-current of discharge current
L	L	H	H	Low-voltage of control power supply
L	H	L	L	Over-voltage of DC link
L	H	L	H	Over-voltage of Capacitor Module
L	H	H	L	Low-voltage of Capacitor Module
L	H	H	H	Over-heat of Control Module
H	L	L	L	Alarm of Power supply
H	L	L	H	Abnormal charge of Capacitor Module
H	L	H	L	Resistor Module Abnormal discharge (1) Resistor Module Abnormal discharge (2) Over-heat of Resistor Module
H	L	H	H	Communication error
H	H	L	L	Energy supply stop
H	H	L	H	Current control circuit malfunction
H	H	H	L	Fuse blowing Note1)
H	H	H	H	Cooling fan stop Note2)

Note 1)
When the fuse blowing alarm occurs, the LED (D2) in the front of a Capacitor Module that the fuse was blown turn off the light. It shows which the fuse of a Capacitor Module was blown. In addition, please keep the control voltage (24V) ON during confirming.

Note 2)
In case of the cooling fan stop occurs, although ECM works continuously, please exchange the cooling fan a little early. Depending on ambient air temperature or the operating condition of ECM, the life of parts of the Control Module becomes short, or over-heat of Control Module may occur.

6. Outline and Panel cut

6.1 Control Module (A06B-6158-H010)
Weight: 7.7kg

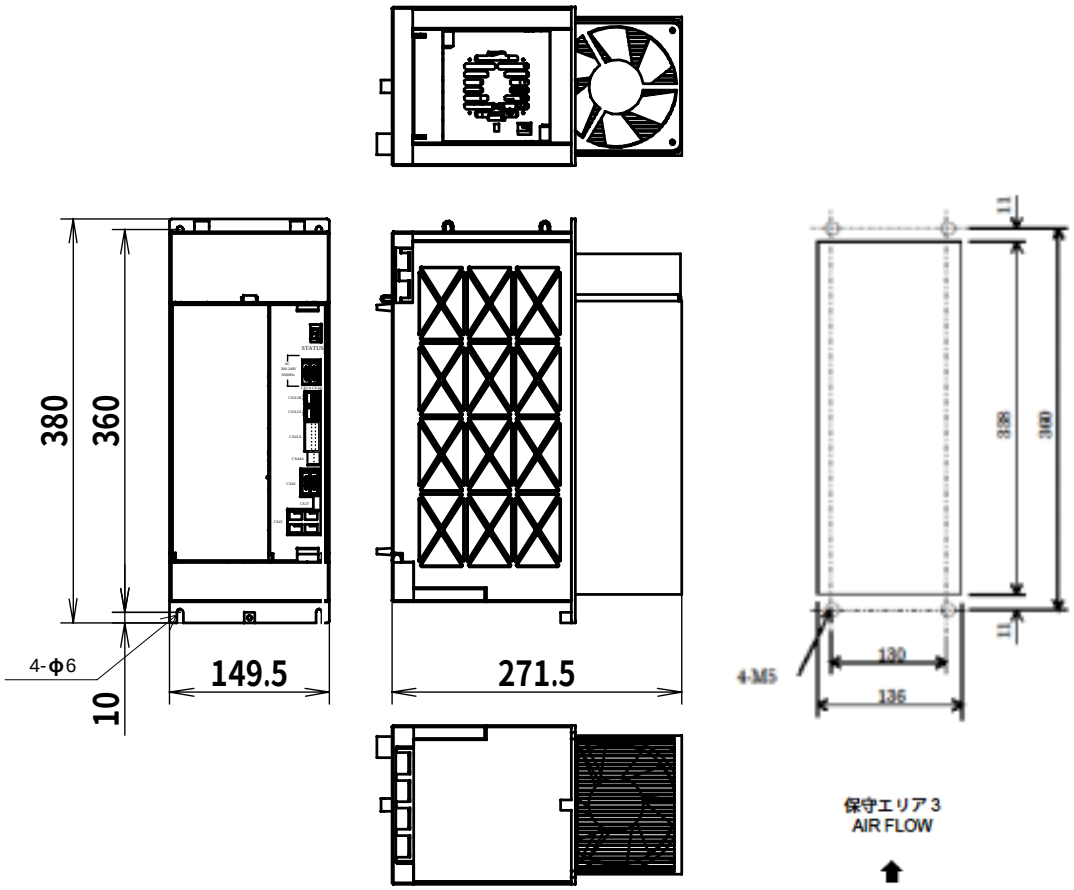

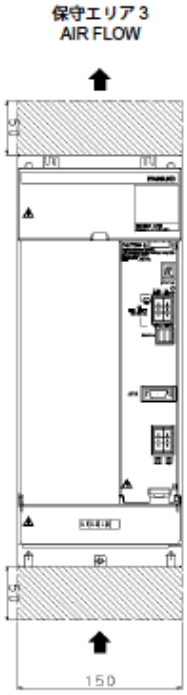

				TITLE	
				Energy Charge Module DESCRIPTIONS	
				DRAW. NO. B-65282EN/06-02	CUST.
EDIT.	DATE	DESIG.	DESCRIPTION	FANUC LTD	SHEET 23/36

6.2 Capacitor Module (A06B-6158-H020)
Weight: 11.4kg

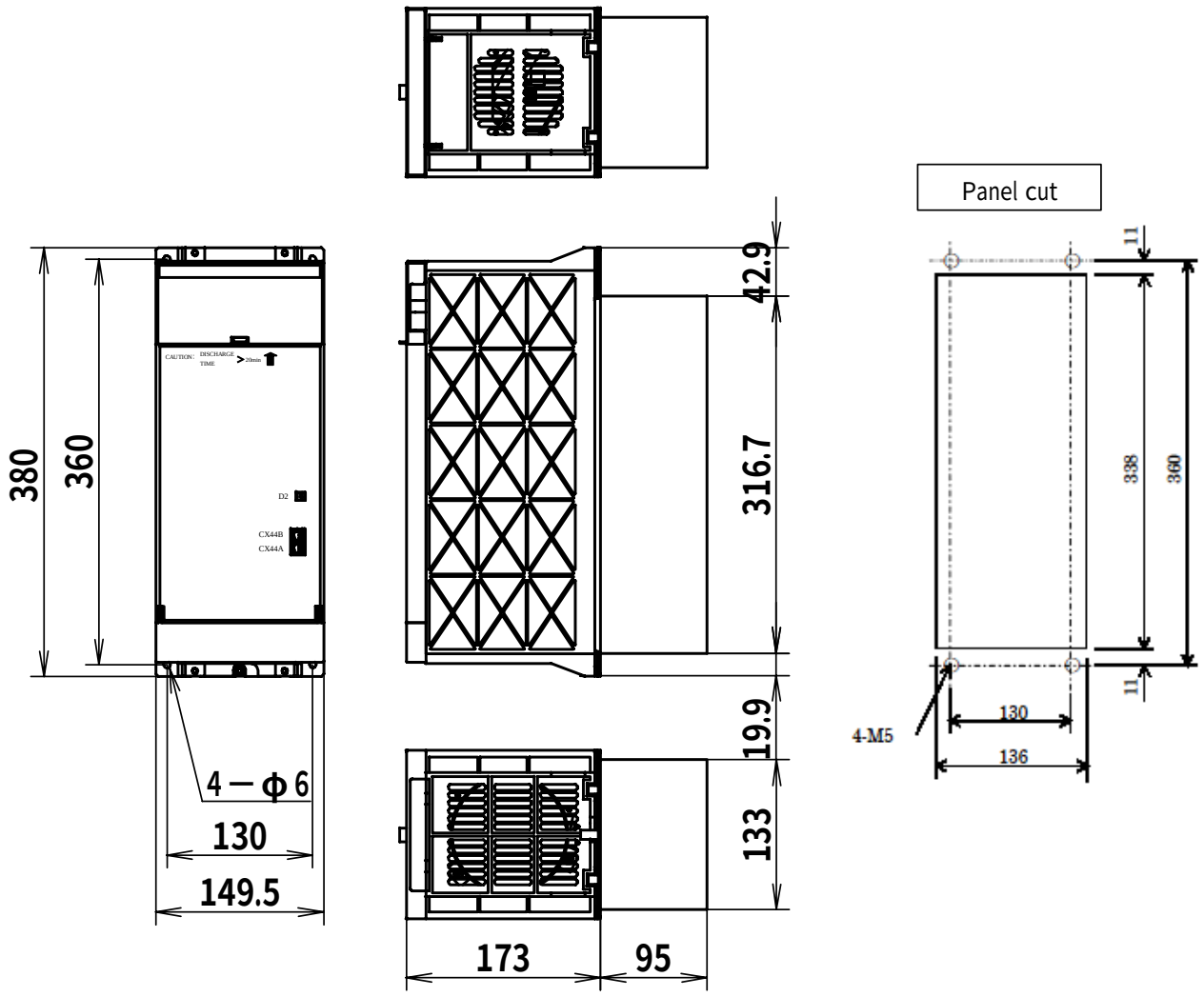

Note) A Capacitor Module (for smoothing) must be attached to the left side of a Control Module without a gap.

				TITLE	
				Energy Charge Module DESCRIPTIONS	
				DRAW. NO. B-65282EN/06-02	CUST.
EDIT.	DATE	DESIG.	DESCRIPTION	FANUC LTD	SHEET 24/36

6.3 Resistor Module (A06B-6158-H030)
Weight of 7.1kg

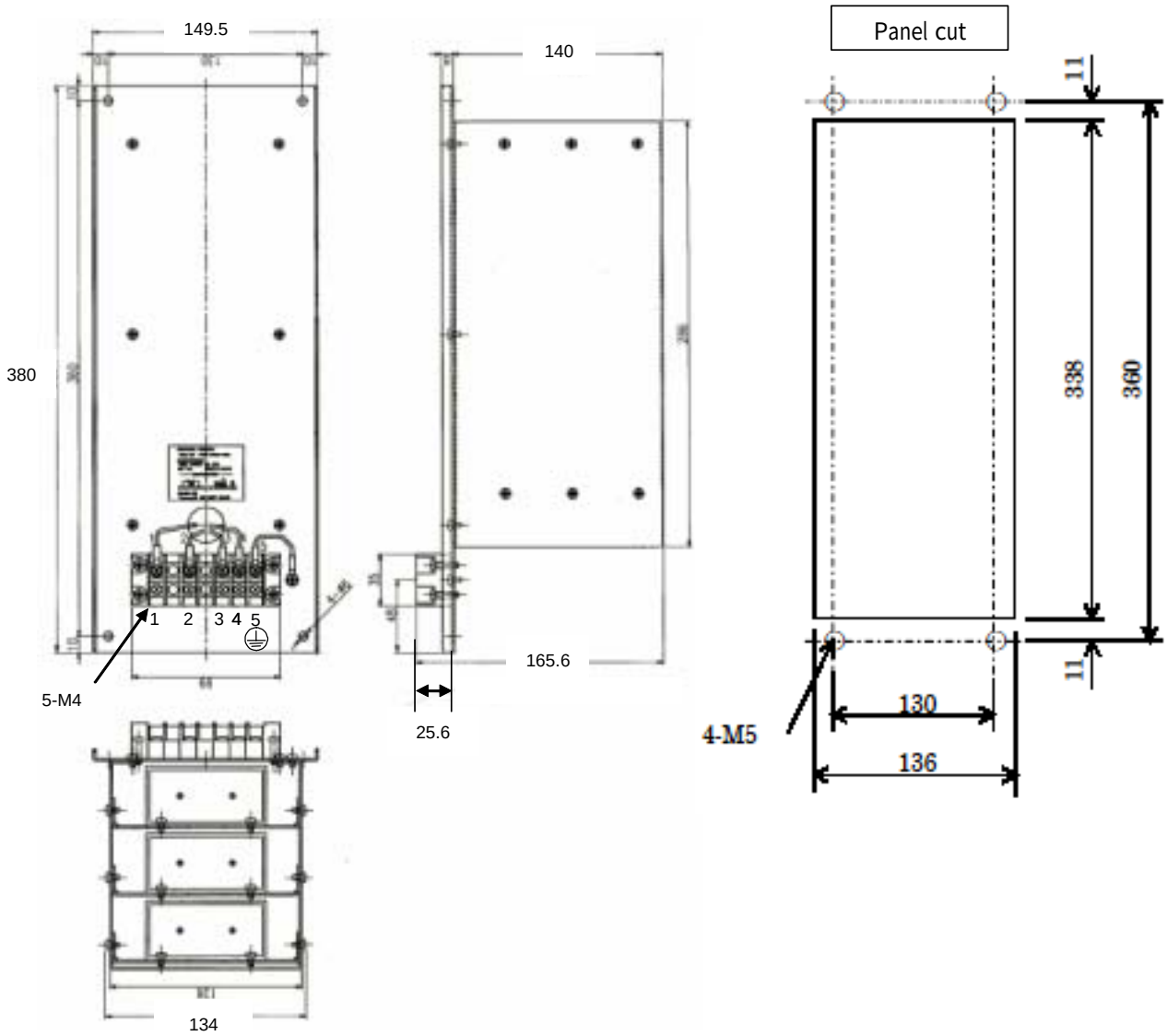

				TITLE	
				Energy Charge Module DESCRIPTIONS	
				DRAW. NO. B-65282EN/06-02	CUST.
EDIT.	DATE	DESIG.	DESCRIPTION	FANUC LTD	SHEET 25/36

6. 4 DC Reactor (A06B-6158-H040)
100A 0.5mH
Weight: 32kg

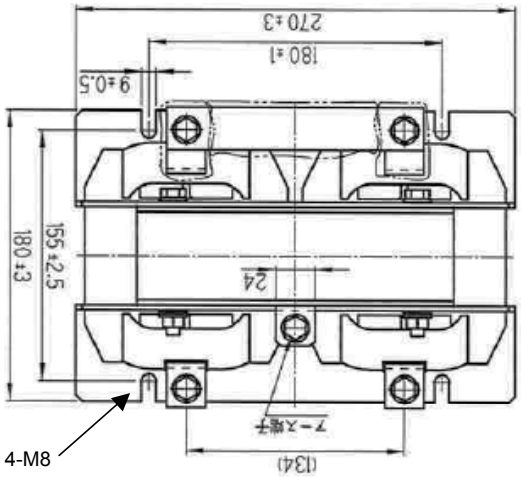

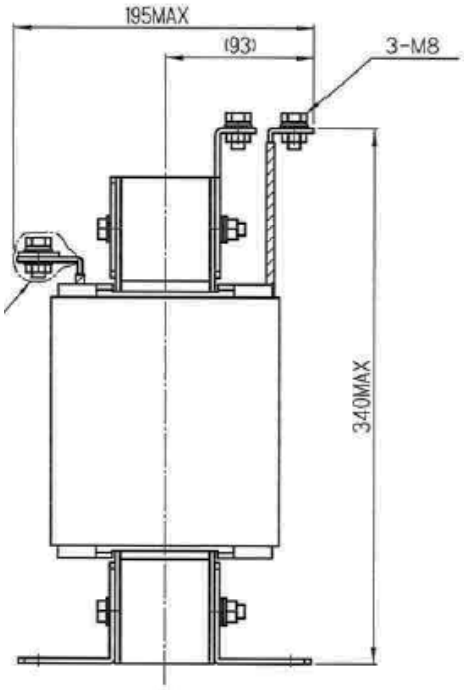

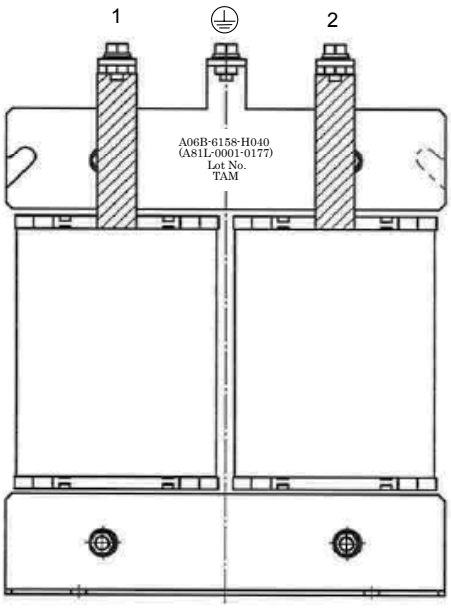

				TITLE	
				Energy Charge Module DESCRIPTIONS	
				DRAW. NO. B-65282EN/06-02	CUST.
EDIT.	DATE	DESIG.	DESCRIPTION	FANUC LTD	SHEET 26/36

7. Connection

7.1 Connection diagram

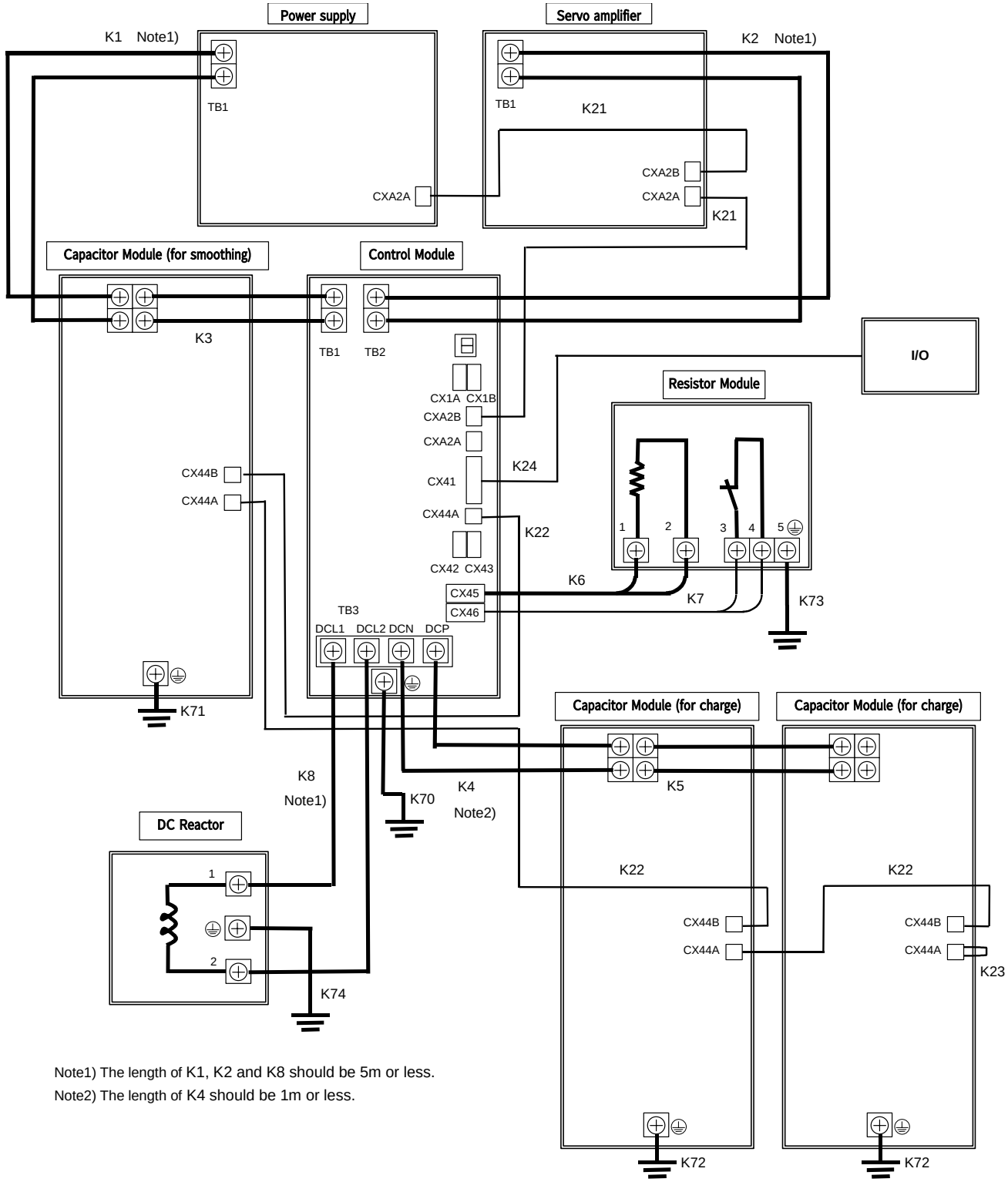

Note1) The length of K1, K2 and K8 should be 5m or less.

Note2) The length of K4 should be 1m or less.

				TITLE	
				Energy Charge Module DESCRIPTIONS	
				DRAW. NO. B-65282EN/06-02	CUST.
EDIT.	DATE	DESIG.	DESCRIPTION	FANUC LTD	SHEET 27/36

7.2 Cable connection details

7.2.1 Connection of cables K1, K2 and K3 (Connection of DC link)

- Cable K1: The connection between "Power supply" and " Capacitor Module (for smoothing)"
- Cable K2: The connection between "Servo amplifier" and "Control Module"
- Cable K3: The connection between "Control Module" and "Capacitor Module (for smoothing)"

<table>
<tr><td>Item</td><td colspan="4">Description</td></tr>
<tr><td rowspan="6">Size</td><td>Effective current of DC link</td><td>Average output of motor (Note 1)</td><td>Heat-resistant cable (Note 2)</td><td>AWG</td></tr>
<tr><td>92Arms or less</td><td>23kW or less</td><td>22 mm^2 or more</td><td>AWG4 or more</td></tr>
<tr><td>112rms or less</td><td>29kW or less</td><td>30 mm^2 or more</td><td>AWG2 or more</td></tr>
<tr><td>131Arms or less</td><td>33kW or less</td><td>38 mm^2 or more</td><td>AWG1 or more</td></tr>
<tr><td>155Arms or less</td><td>40kW or less</td><td>50 mm^2 or more</td><td>AWG1/0 or more</td></tr>
<tr><td colspan="4">(Note 1) The relation between the effective current of DC link and the average output of motor depends on the operational pattern of the motor. So these values are for reference.
(Note 2) Fire-retardant polyflex wire (heat-resistant 105°C) or equivalent to LMFC manufactured by The Furukawa Electric Co., Ltd.
(Note 3) The cable size must be selected according to a user's environment and requirements.</td></tr>
<tr><td>Terminal screw</td><td colspan="4">M6</td></tr>
<tr><td>Rigid torque</td><td colspan="4">3.5-4.5Nm</td></tr>
<tr><td>Consideration</td><td colspan="4">[Connection of K1 and K2]
• Line length should use 5m or less.
• Two cables must be made into a twisted pair.
• K1 and K2 separates from a signal line and must be wired.
• The metal plate (A06B-6110-K504) must be attached to DC link terminal of Power supply (300mm) width and Servo amplifier (300mm).
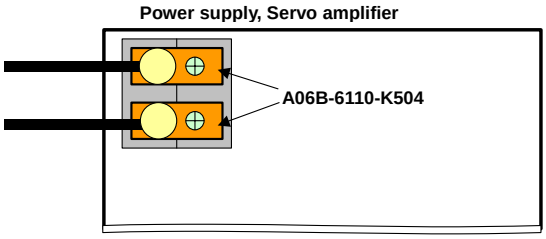

[Connection of K3]
• A Capacitor Module (for smoothing) must be attached to the left side of a Control Module without a gap.
• In the case of the wire size of K3 is 22mm2, the short bar A06B-6078-K804 can be used.</td></tr>
</table>

7.2.2 Connection of cable K4

- Cable K4: The connection between "Control Module" and "Capacitor Module (for charge)"

Item	Description	
Cable size	Heat-resistant cable (Note 1)	AWG
	22 mm^2 or more	AWG4 or more
	(Note 1) Fire-retardant polyflex wire (heat-resistant 105°C) or equivalent to LMFC manufactured by The Furukawa Electric Co., Ltd.	
Terminal screw	M6	
Rigid torque	3.5-4.5Nm	
Consideration	• Line length should use 1m or less. • Two cables must be made into a twisted pair.	

7.2.3 Connection of cable K5

- Cable K5: Connection between "Capacitor Modules (for charge)"

Item	Description		
Cable size	Short bar (Note 1)	Heat-resistant cable (Note 2)	AWG
	A06B-6078-K800	22 mm^2 or more	AWG4 or more
	(Note 1) In the case of Capacitor Modules are attached without a gap, the short bar A06B-6078-K800 can be used. (Note 2) Fire-retardant polyflex wire (heat-resistant 105°C) or equivalent to LMFC manufactured by The Furukawa Electric Co., Ltd.		
Terminal screw	M6		
Rigid torque	3.5-4.5Nm		
Consideration	• In the case of Capacitor Modules (for charge) cannot be installed without a gap, the length of the cable should be 1m or less and two cables must be made into a twisted pair.		

7.2.4 Connection of cables K6 and K7

- Cable K6: Connection between "Control Module" and "The resistor built in Resistor Module"
- Cable K7: Connection between "Control Module" and "The thermostat built in Resistor Module"

Cable Identifier	Conformity cable	Housing (Note 1)	Contact (Note 1)	Connection tool (Note 1)
K6 (Note 2)	5.5 mm^2 (Note 3)	Key: Y-Y 2-917807-2	M size 316041-6	M size 234171-1
K7 (Note 2)	1.25 mm^2 (Note 3)		S size 316040-6	S size 234170-1

(Note 1) The housing and the contact of a connector are D-5000 series of Tyco electronics AMP.
(Note 2) Cables K6 and K7 should wire without bundling.
(Note 3) Fire-retardant polyflex wire (heat-resistant 105°C) or equivalent to LMFC manufactured by the Furukawa Electric Co., Ltd
or Two-conductor polyvinyl heavy-duty power cable (JIS C3312) (heat-resistant 60°C)

⚠ WARNING)

- Control Module should be damaged if the resistor is conversely connected with the thermostat. Please be careful with the connection.
- Please be sure to check the following with a tester before inserting the connector in Control Module.

  (1) The resistance between B1-B2 of the connector should be 30ohm±5%.

  (2) The resistance between A1-A2 of the connector should be 0.5ohms or less.

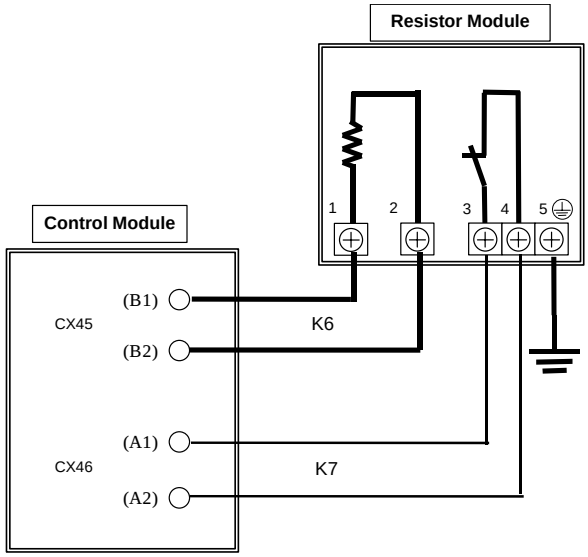

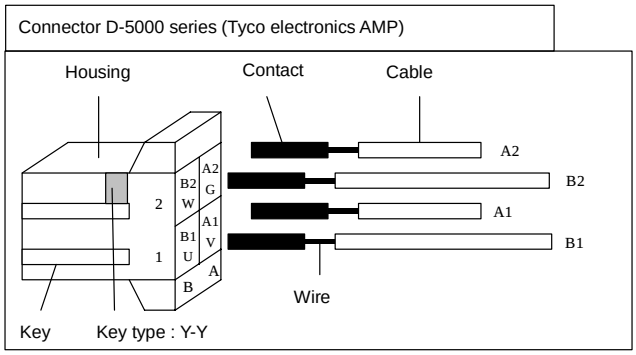

7.2.5 Connection of cable K8

- Cable K8: Connection between "Control Module" and "DC Reactor"

Item	Description	
Cable size	Heat-resistant cable (Note 1)	AWG
	22 mm^2 or more	AWG2 or more
	(Note 1) Fire-retardant polyflex wire (heat-resistant 105°C) or equivalent to LMFC manufactured by the Furukawa Electric Co., Ltd	
Terminal screw	The Control Module side: M6	The DC Reactor side: M8
Rigid torque	The Control Module side: 3.5 to 4.5 Nm	The DC Reactor side: 8.5-9.5 Nm
Consideration	• Line length should use 5m or less. • Two cables must be made into a twisted pair.	

7.2.6 Connections of Cable K70, K71, K72, K73 and K74

- Cable K70-K74: For grounding connection

Cable	Section	Cable size (Note 1)	Terminal screw	Rigid torque
K70	Control Module	16 mm^2 or more (K1: 22 mm^2)	M5	2.0-2.5Nm
K71	Capacitor Module (For smoothing)	16 mm^2 or more (K1: 22mm^2)	M5	2.0-2.5Nm
K72	Capacitor Module (For charge)	16 mm^2 or more (K4: 22 mm^2)	M5	2.0-2.5Nm
K73	Resistor Module	5.5 mm^2 or more	M4	1.1-1.5Nm
K74	DC Reactor	16 mm^2 or more (K8: 22 mm^2)	M8	8.5-9.5 Nm

(Note 1) The cable size for grounding depends on the cable size of a power line (K1, K4, K8).
In the case of the cable size is 22 mm^2, the cable size is 16 mm^2 or more.
In the other case, the cable size for grounding can be selected according to the following table.

Cable size of Power line S (mm^2)	Cable size of groundings (mm^2)
$S \leq 5.5$	5.5 or more
$5.5 < S \leq 16$	More than S
$16 < S \leq 35$	16 or more
$35 < S$	More than S/2

7.2.7 Connection of cable K21

- Cable K21: Connection of the interface signal between "Servo amplifier" and a "Control Module"

Cable Identifier	Conformity cable	Instruction outer daimeter	Housing (Note 1)	Contact (Note 1)	Connection tool (Note 1)
K21 (Note 2)	0.5 mm^2 or AWG20	1.08-2.83 mm	1-1318119-4	1318107-1	91595-1

(Note 1) The housing and the contact of a connector are D-2100 series of Tyco electronics AMP. Two connectors and 16 contacts are required.

(Note 2) (B3) BATL is the connection of a battery for the absolute Pulsecoder. Refer to FANUC SERVO AMPLIFIER αi series DESCRIPTIONS B-65282EN.

(Note 3) Cable K21and power line should be wired without bundling..

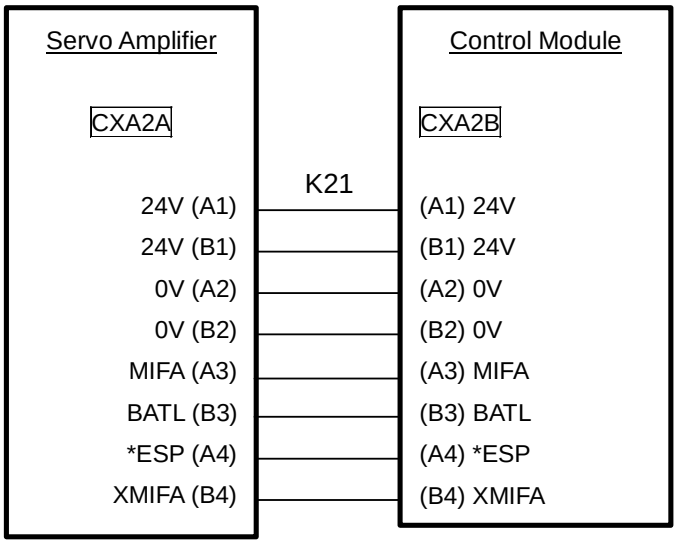

7.2.8 Connection of cables K22 and K23

- Cable K22: Connection between "Control Module" and "The signal of the fuse blowing in Capacitor Module"
- Cable K23: Dummy connector for the termination of the signal of the fuse blowing.

Cable Identifier	Conformity cable	Instruction outer daimeter	Housing (Note 1)	Contact (Note 1)	Connection tool (Note 1)
K22 K23 (Note 2)	0.5mm2 or AWG20	1.11-1.87mm	1-1318120-3	1318107-1	91595-1

(Note 1) The housing and the contact of a connector are D-2100 series of Tyco electronics AMP.
AS for K22, two connectors and six contacts are required.
AS for K23, one connector and two contacts are required.
(Note 2) Cable K22 and power line should be wired without bundling.

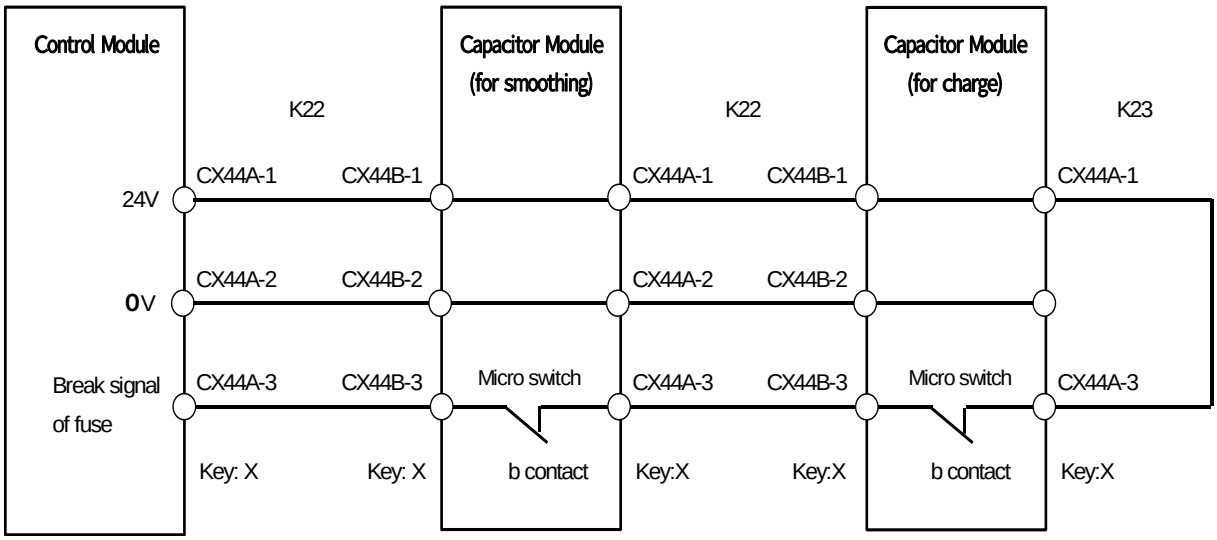

				TITLE	
				Energy Charge Module DESCRIPTIONS	
				DRAW. NO. B-65282EN/06-02	CUST.
EDIT.	DATE	DESIG.	DESCRIPTION	FANUC LTD	SHEET 33/36

7.2.9 Cable K24

- Cable K24: Connection of the interface signal between a "Control Module" and "I/O"

Cable Identifier	Conformity cable	Instruction outer daimeter	Connector (Note 1)	Electric contact point (Note 1)	Sticking-by-pressure tool (Note 1)
K24 (Note 2)	0.5mm2 or AWG20	1.11-1.87mm	1-1318118-9	1318107-1	91595-1

(Note 1) The housing and the contact of a connector are D-2100 series of Tyco electronics AMP.
One connector is required. The number of contact is ordered according to the using signals.
(Note 2) Cable K24 and power line should be wired without bundling.
(Note 3) In case of the distance between Servo amplifier, a Control Module, and I/O is long (for example, by the reason that modules are mounted in separated cabinet), FANUC I/O Unit-Model A which is insulated type is recommended in order to prevent malfunction of the signal by a noise.

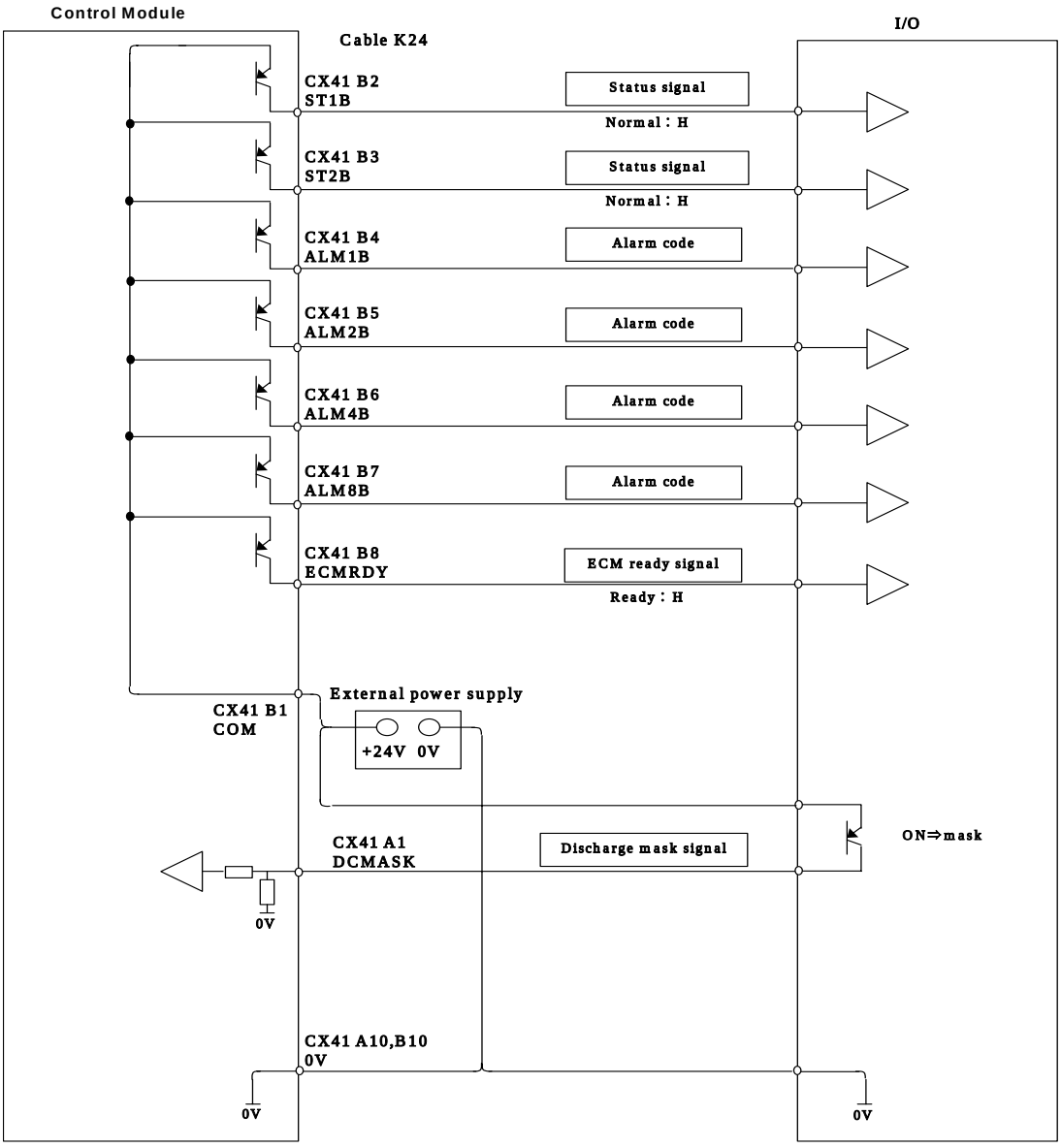

[Input signal specifications (DCMASK, SPSTP)]

Contact capacity	DC24V+10% 10mA
Voltage drop between contacts which are closed	Less than 2V (Voltage drop of a cable is also included)

[Output signal specifications (ST*B, ALM*B, ECMRDY)]

Maximum load current	200mA or less
Maximum voltage	24V+20% or less
Saturation voltage of transistor	1V or less (at load current is 200mA)
Leakage current of transistor	20μA or less

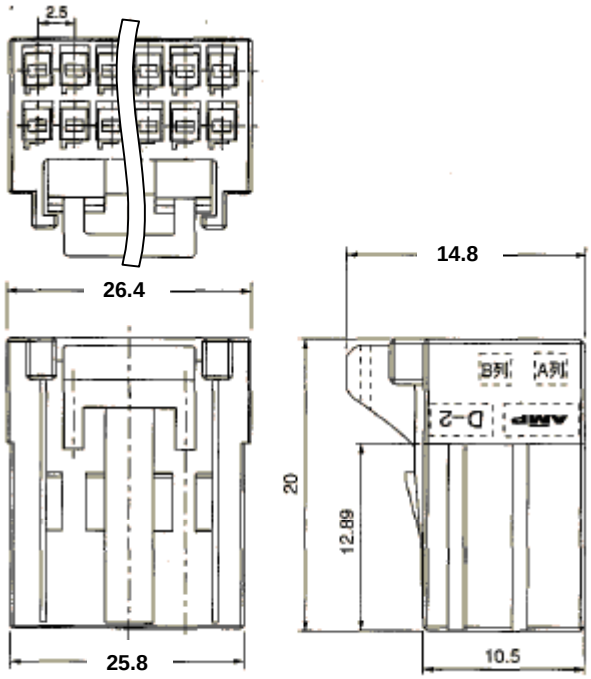

7.2.10 Separation of power line and signal line

In order to prevent the influence of the noise from a power line to a signal line, power line and signal line should be wired without bundling.

Line name	Cable name
Power line	K1, K2, K3, K4, K5, K6, K8
Signal line	K7, K21, K22, K24

7.2.11 Short bar and Connector

[Short bar]

Cable name	Remarks	Specifications
K1, K2	The metal plate must be attached to DC link terminal of Power supply (300mm) width and Servo amplifier (300mm).	A06B-6110-K504 2 Short bars
K3	The connection between "DC link of Control Module" and "Capacitor Module (for smoothing)"	A06B-6078-K804 2 Short bars
K5	Connection between "Capacitor Modules (for charge)"	A06B-6078-K800 2 Short bars

[Connector]

Cable name	Remarks	Specifications
K6、K7	Connection between "Control Module" and "Resistor Module"	A06B-6110-K505 Housing: 1 Contact (M): 2 Contact (S): 2
K21	Connection of the interface signal between "Servo amplifier" and a "Control Module"	A06B-6110-K210 Housing: 1 Contact: 8
K22	Connection between "Control Module" and "The break signal of the fuse in Capacitor Module"	A06B-6110-K506 Housing: 1 Contact: 3
K23	Dummy connector for the termination of the break signal of the fuse.	A06B-6130-K202 Housing: 1 Contact: 2
K24	Connection of the interface signal between a "Control Module" and "I/O"	A06B-6110-K508 Housing: 1 Contact: 13