РЕМСТАНМАШ
ТЕХНОЛОГИИ ДЛЯ ПРОИЗВОДСТВА

ООО «Ремстанмаш»
214000, г. Смоленск, улица Верхне - Сенная улица, дом 4, офис № 223
Тел.: 8(499)704-02-67
Тел.: 8-800-511-02-67
E-mail.: info@cnhelp.ru
http://www.cnchelp.ru

Dimensions

[A860-2150-T***]

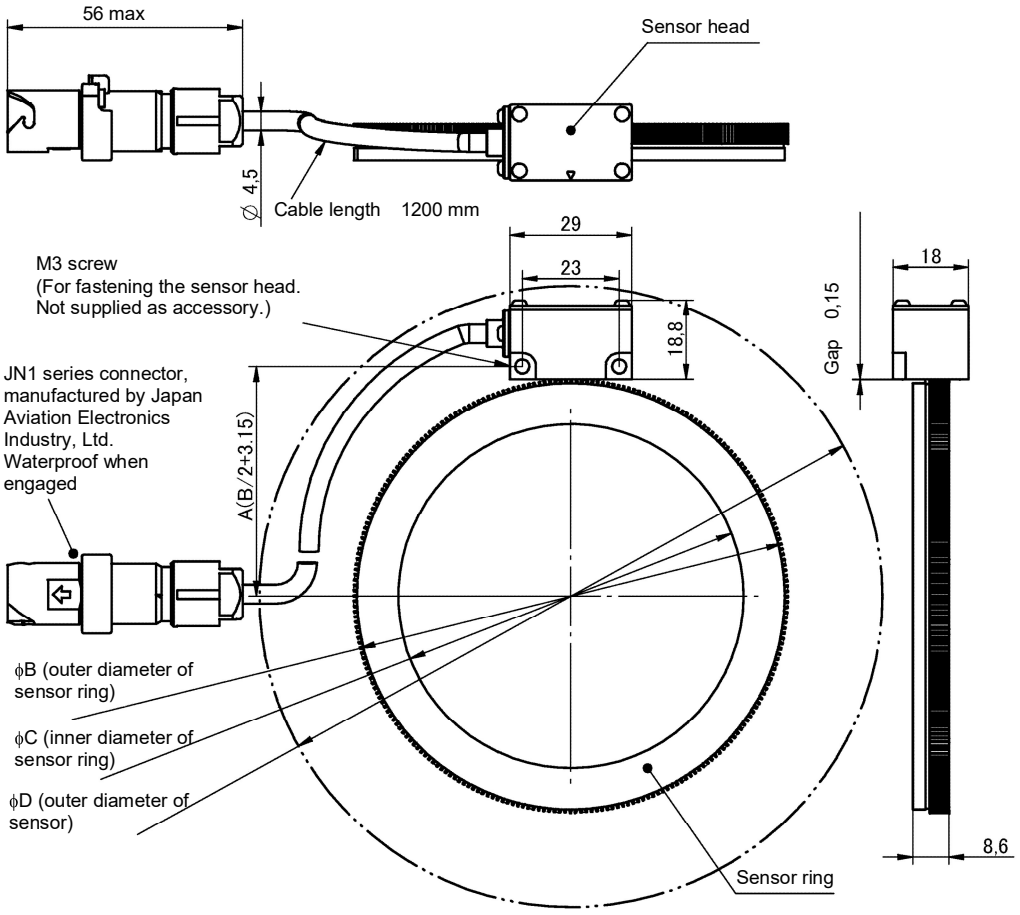

Accessories:

Straight pin (JIS B 1354-1988, class A, normal diameter of ϕ3, normal length of 6) × 2, 0.15-mm thickness gage × 1

Unit (mm)

Sensor type number	Number of teeth	A	ϕB	ϕC	ϕD
A860-2150-T201	128	29.15	$52^{+0}_{-0.020}$	$40^{+0.016}_{-0}$	98
A860-2150-T211					
A860-2150-T301	192	41.95	$77.6^{+0}_{-0.020}$	$60^{+0}_{-0.018}$	122
A860-2150-T311					
A860-2150-T401	256	54.75	$103.2^{+0}_{-0.020}$	$82^{+0}_{-0.018}$	148
A860-2150-T404				$88^{+0}_{-0.018}$	
A860-2150-T411				$82^{+0}_{-0.018}$	
A860-2150-T511	384	80.35	$154.4^{+0}_{-0.020}$	$125^{+0.025}_{-0}$	198
A860-2150-T611	512	105.95	$205.6^{+0}_{-0.020}$	$160^{+0.020}_{-0.005}$	249

ООО «Ремстанмаш»
214000, г. Смоленск, улица Верхне - Сенная улица, дом 4, офис № 223
Тел.: 8(499)704-02-67
Тел.: 8-800-511-02-67
E-mail.: info@cnhelp.ru
http://www.cnchelp.ru

[A860-2155-T***]

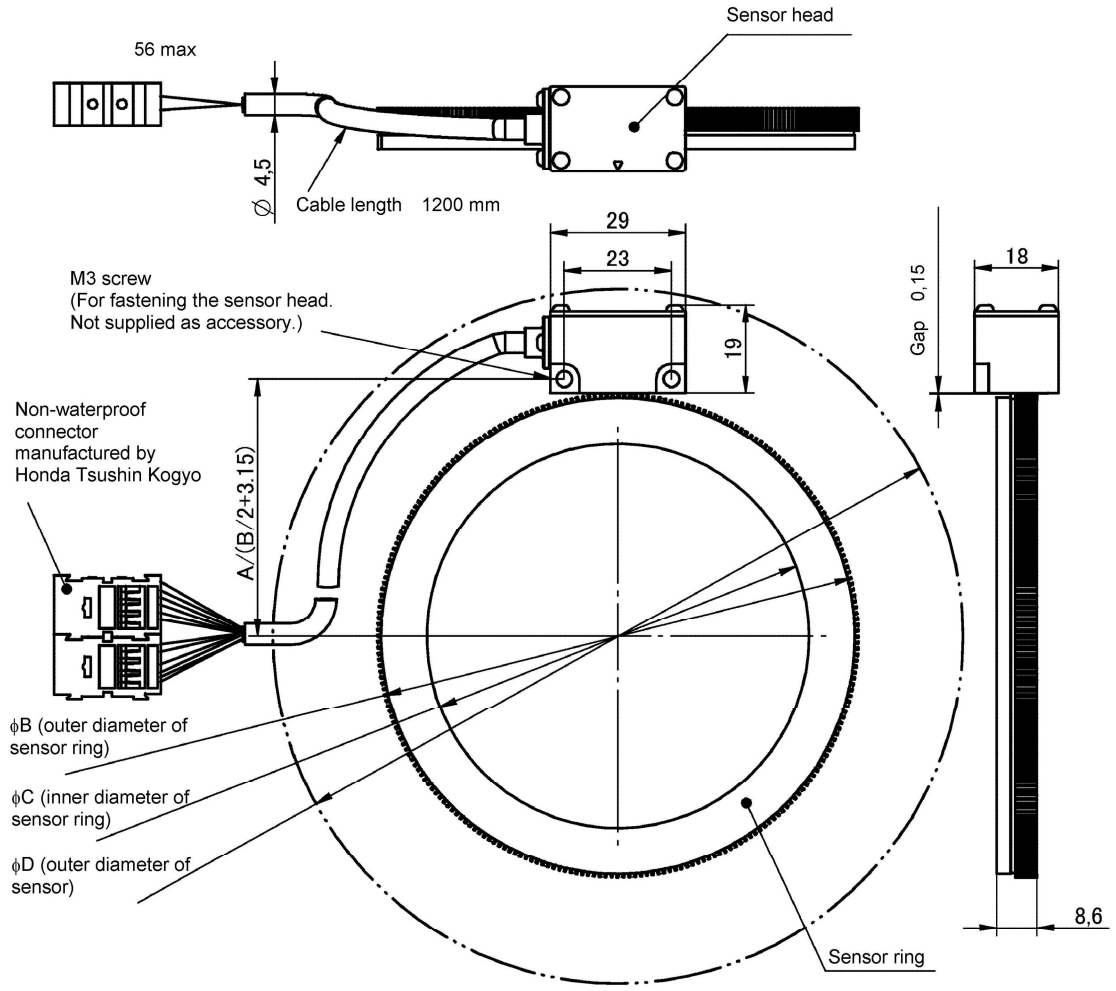

Accessories:

Straight pin (JIS B 1354-1988, class A, normal diameter of ϕ3, normal length of 6) × 2, 0.15-mm thickness gage × 1

Unit (mm)

Sensor type number	Number of teeth	A	ϕB	ϕC	ϕD
A860-2155-T201	128	29.15	$52^{+0}_{-0.020}$	$40^{+0.016}_{-0}$	98
A860-2155-T211					
A860-2155-T301	192	41.95	$77.6^{+0}_{-0.020}$	$60^{+0}_{-0.018}$	122
A860-2155-T311					
A860-2155-T401	256	54.75	$103.2^{+0}_{-0.020}$	$82^{+0}_{-0.018}$	148
A860-2155-T404				$88^{+0}_{-0.018}$	
A860-2155-T411				$82^{+0}_{-0.018}$	
A860-2155-T511	384	80.35	$154.4^{+0}_{-0.020}$	$125^{+0.025}_{-0}$	198
A860-2155-T611	512	105.95	$205.6^{+0}_{-0.020}$	$160^{+0.020}_{-0.005}$	249

ООО «Ремстанмаш»
214000, г. Смоленск, улица Верхне - Сенная улица, дом 4, офис № 223
Тел.: 8(499)704-02-67
Тел.: 8-800-511-02-67
E-mail.: info@cnhelp.ru
http://www.cnchelp.ru

NOTE
- Use the sensor under 80°C.
- The sensor is a precision part. Use special care in handling. In particular, do not apply force to the sensor head.
- Fasten the cable to the machine at an appropriate position so that no force is applied directly to the sensor head.
- The sensor is waterproof to an IP67 rating. Note, however, that the waterproofness represented by IP indicates short-time resistance to water only and does not guarantee thorough waterproofness. Therefore, protect the sensor head against direct splash of coolant and so on by taking appropriate measures, for example, by installing a cover.
- When installing the sensor, observe the requirements described in "Installation" described later.
- For easy maintenance, mount the αiBZ sensor at a position where it can be replaced easily.
- Sensor rings with the same specification number can be replaced with each other.

Notes on the sensor ring

The sensor ring consists of the phase Z signal generation section and the phase A/B signal generation section. The new αiBZ sensors are different from the conventional αiBZ sensors in that the new αiBZ sensors integrate the phase A/B signal generation section and the phase Z signal generation section into one piece, and that the phase Z signal generation section has a convex shape instead of a concave shape. When handling the sensor ring, be very careful not to deform or damage the teeth on the outer surface of the sensor ring.

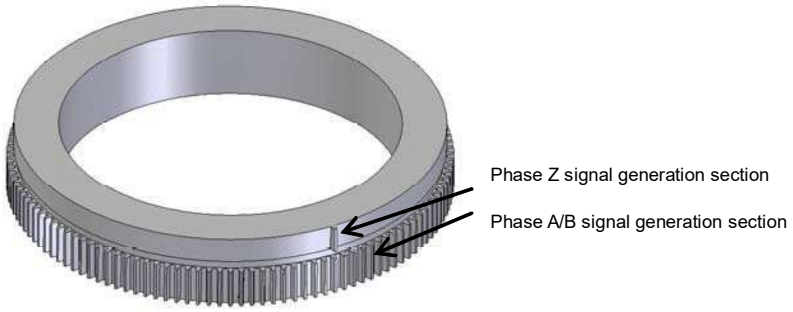

РЕМСТАНМАШ
ТЕХНОЛОГИИ ДЛЯ ПРОИЗВОДСТВА

ООО «Ремстанмаш»
214000, г. Смоленск, улица Верхне - Сенная улица, дом 4, офис № 223
Тел.: 8(499)704-02-67
Тел.: 8-800-511-02-67
E-mail.: info@cnhelp.ru
http://www.cnchelp.ru

Interference of the sensor ring

The following table lists the interference for heat shrink fitting for the sensor ring at each maximum speed:

Unit (μm)

Max. speed (min^{-1})	T201	T211	T301	T311	T401 T404	T411	T511	T611
3000	ϕ6 - ϕ32	ϕ6 - ϕ32	ϕ6 - ϕ34	ϕ6 - ϕ34	ϕ7 - ϕ35	ϕ7 - ϕ35	ϕ8 - ϕ43	ϕ11 - ϕ41
3500	↓	↓	↓	↓	↓	↓	ϕ9 - ϕ44	ϕ13 - ϕ43
4500	↓	↓	↓	↓	↓	↓	ϕ11 - ϕ46	ϕ19 - ϕ49
6000	↓	↓	ϕ7 - ϕ35	ϕ7 - ϕ35	ϕ9 - ϕ37	ϕ9 - ϕ37	ϕ15 - ϕ50	ϕ29 - ϕ59
8000	↓	↓	ϕ8 - ϕ36	ϕ8 - ϕ36	ϕ11 - ϕ39	ϕ11 - ϕ39	ϕ24 - ϕ59	ϕ47 - ϕ77
10000	↓	↓	ϕ9 - ϕ37	ϕ9 - ϕ37	ϕ15 - ϕ43	ϕ14 - ϕ42	ϕ35 - ϕ70	ϕ71 - ϕ101
12000	ϕ7 - ϕ33	ϕ7 - ϕ33	ϕ11 - ϕ39	ϕ11 - ϕ39	ϕ19 - ϕ47	ϕ18 - ϕ46	ϕ47 - ϕ82	
15000	ϕ8 - ϕ34	ϕ8 - ϕ34	ϕ13 - ϕ41	ϕ13 - ϕ41	ϕ28 - ϕ56	ϕ26 - ϕ54	ϕ71 - ϕ106	
20000	ϕ10 - ϕ36	ϕ10 - ϕ36	ϕ19 - ϕ47	ϕ19 - ϕ47		ϕ41 - ϕ69		
25000		ϕ12 - ϕ38		ϕ27 - ϕ55		ϕ62 - ϕ90		
30000		ϕ15 - ϕ41		ϕ37 - ϕ65		ϕ87 - ϕ115		
40000		ϕ23 - ϕ49		ϕ61 - ϕ89				
50000		ϕ33 - ϕ59						
60000		ϕ43 - ϕ69						
70000		ϕ57 - ϕ83						

NOTE
- From the above table, select the suitable interference according to the maximum speed and the type of the ring used.
  If an interference not listed above is applied, the ring will be damaged or loosen while the spindle rotates.
- These rings cannot be used at a speed higher than the speeds specified in the above table.

ООО «Ремстанмаш»
214000, г. Смоленск, улица Верхне - Сенная улица, дом 4, офис № 223
Тел.: 8(499)704-02-67
Тел.: 8-800-511-02-67
E-mail.: info@cnhelp.ru
http://www.cnchelp.ru

Installation

Install the sensor according to the procedure below.

<1> Machine the sensor mounting surface as necessary then insert the straight pins.

<2> Fit the sensor ring around the machine shaft (or sleeve) by heat shrink fitting.

<3> Adjust the gap between the sensor head and sensor ring then mount the sensor on the machine. Fig. 1 shows the parts to be installed and Fig. 2 shows the external view after installation.

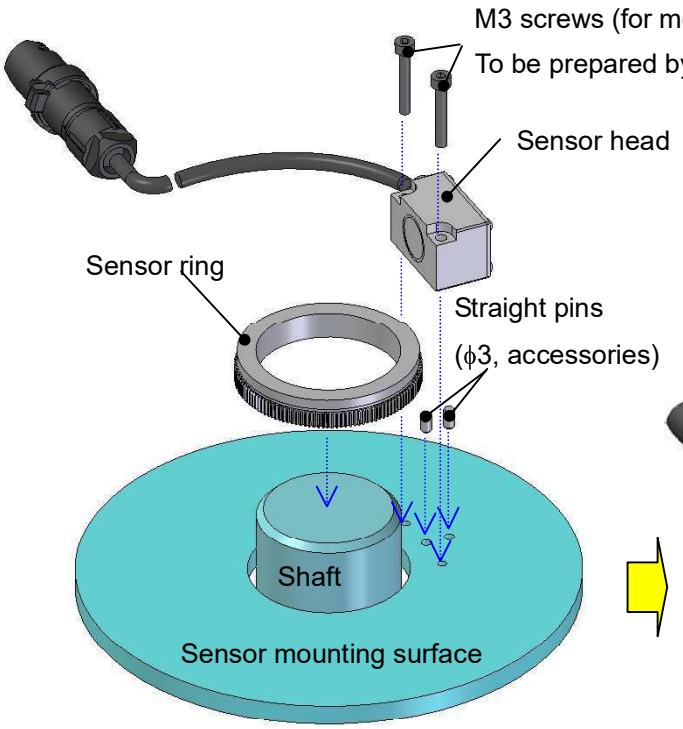

Fig. 1 Parts to be installed

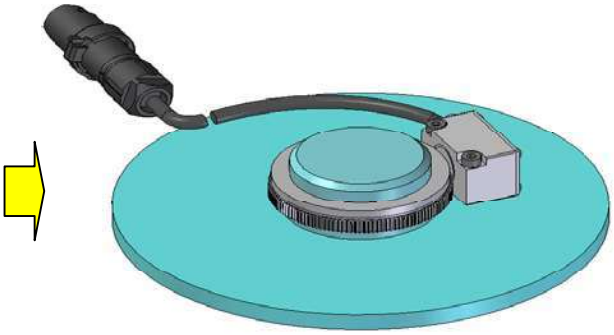

Fig. 2 After installation

ООО «Ремстанмаш»
214000, г. Смоленск, улица Верхне - Сенная улица, дом 4, офис № 223
Тел.: 8(499)704-02-67
Тел.: 8-800-511-02-67
E-mail.: info@cnhelp.ru
http://www.cnchelp.ru

Machining the sensor mounting surface

Machine the sensor mounting surface as shown in Fig. 3. Insert straight pins (supplied as accessories) into the 2-ϕ3H6 holes. The straight pins are used as the guide for gap adjustment described later.

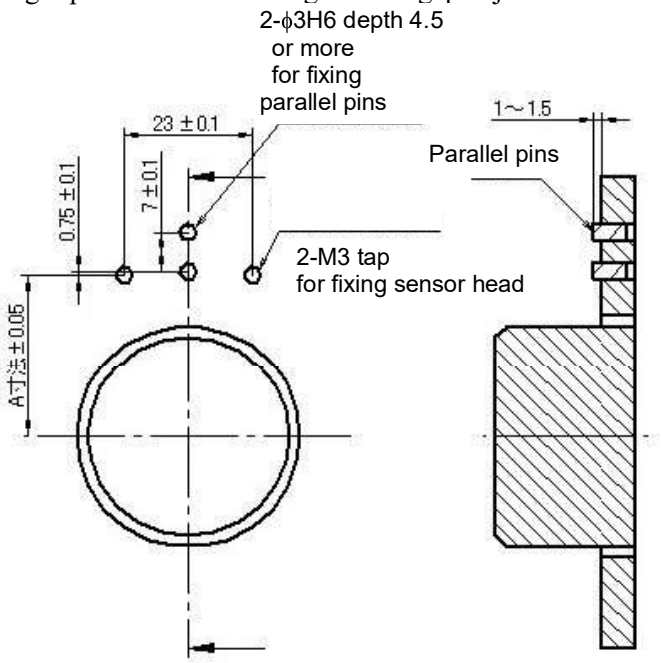

Fig. 3

Installing the sensor ring

Fit the sensor ring around the shaft or sleeve by heat shrink fitting so that the bottom of the phase A/B signal generation section (gear) is 4.7 ±0.2 mm off the sensor mounting surface. The runout of the shaft or sleeve part around which the sensor ring is fit by heat shrink fitting must be 0.005 mm or less.

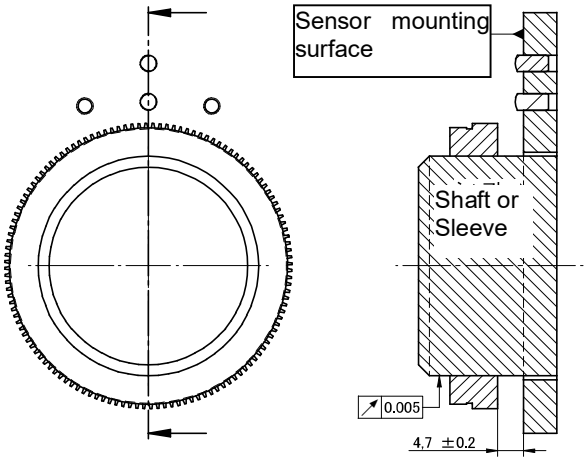

РЕМСТАНМАШ
ТЕХНОЛОГИИ ДЛЯ ПРОИЗВОДСТВА

ООО «Ремстанмаш»
214000, г. Смоленск, улица Верхне - Сенная улица, дом 4, офис № 223
Тел.: 8(499)704-02-67
Тел.: 8-800-511-02-67
E-mail.: info@cnhelp.ru
http://www.cnchelp.ru

Installing the sensor head

Install the α*i*BZ sensor head according to the procedure below.

Place the sensor head on the sensor mounting surface so that the straight pins are positioned in the slot of the sensor head, and fasten the sensor head temporarily. When mounting the sensor head, be careful not to hit the sensor head against the sensor ring.

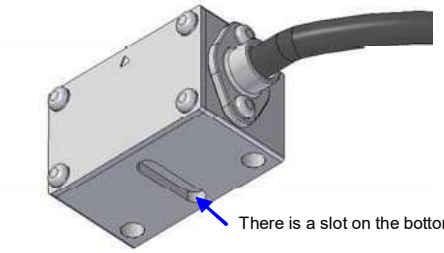

Insert the thickness gage (supplied as an accessory, t = 0.15 mm) between the sensor ring and the sensor head, and while lightly pressing the sensor head against the thickness gage, tighten the sensor mounting screws (recommended tightening torque: 1.3 Nm ±10%). Apply a thread locker or the like to the sensor mounting screws to prevent them from becoming loose.

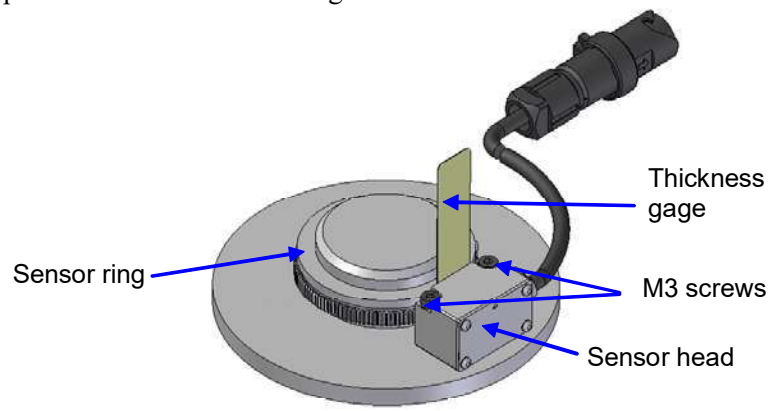

Pull out the thickness gage, and slowly turn the spindle to ensure that the sensor ring and the sensor head do not touch each other.

Check that the gap between the sensor ring and the sensor is at least 0.1 mm.

The output signal level of the α*i*BZ sensor is designed to fall within the specified range if the sensor head is mounted correctly. Depending on the mounting status, the output signal level may exceed the specified range, which can lead to malfunction. Therefore, make sure that the output signal level is within the specified range.