FANUC AC SERVO MOTOR βis series

DESCRIPTIONS

РЕМСТАНМАШ
ТЕХНОЛОГИИ ДЛЯ ПРОИЗВОДСТВА

ООО «Ремстанмаш»
г. Смоленск, Верхне-Сенная, д.4, офис 223.
сайт. www.cnchelp.ru
Тел. 8-800-511-02-67
Тел. +7(499)704-02-67
Тел. 8-919-046-48-46 (WhatsApp, Viber)

B-65302EN/01

・ No part of this manual may be reproduced in any form.
・ All specifications and designs are subject to change without notice.

In this manual we have tried as much as possible to describe all the various matters.
However, we cannot describe all the matters which must not be done, or which cannot be done, because there are so many possibilities.
Therefore, matters which are not especially described as possible in this manual should be regarded as ”impossible”.

SAFETY PRECAUTIONS

This "Safety Precautions" section describes the precautions which must be observed to ensure safety when using FANUC AC servo motors.
Users of any servo motor model are requested to read this "Safety Precautions" carefully before using the servo motor.
The users are also requested to read this manual carefully and understand each function of the motor for correct use.
The users are basically forbidden to do any behavior or action not mentioned in the "Safety Precautions." They are invited to ask FANUC previously about what behavior or action is prohibited.

Contents

1.1 DEFINITION OF WARNING, CAUTION, AND NOTE.....s-2
1.2 WARNING s-3
1.3 CAUTION.....s-6
1.4 NOTE s-8

1.1 DEFINITION OF WARNING, CAUTION, AND NOTE

This manual includes safety precautions for protecting the user and preventing damage to the machine. Precautions are classified into Warning and Caution according to their bearing on safety. Also, supplementary information is described as a Note. Read the Warning, Caution, and Note thoroughly before attempting to use the machine.

> ⚠ **WARNING**
> Applied when there is a danger of the user being injured or when there is a damage of both the user being injured and the equipment being damaged if the approved procedure is not observed.

> ⚠ **CAUTION**
> Applied when there is a danger of the equipment being damaged, if the approved procedure is not observed.

> **NOTE**
> The Note is used to indicate supplementary information other than Warning and Caution.

- Read this manual carefully, and store it in a safe place.

1.2 WARNING

⚠ WARNING

- Be safely dressed when handling a motor.

Wear safety shoes or gloves when handling a motor as you may get hurt on any edge or protrusion on it or electric shocks.

- Use a crane or lift to move a motor from one place to another.

Motors are heavy. When moving them, use a crane or lift as required. (For the weight of motors, refer to their respective specification manuals.)

When moving a motor using a crane or lift, use a hanging bolt if the motor has a corresponding tapped hole, or textile rope if it has no tapped hole. If a motor is attached with a machine or any other heavy stuff, do not use a hanging bolt to move the motor as the hanging bolt and/or motor may get broken.

When moving a motor, be careful not to apply excessive force to its windings as the windings may break and/or their insulation may deteriorate.

- Do not touch a motor with a wet hand.

A failure to observe this caution is vary dangerous because you may get electric shocks.

- Before starting to connect a motor to electric wires, make sure they are isolated from an electric power source.

A failure to observe this caution is vary dangerous because you may get electric shocks.

- Do not bring any dangerous stuff near a motor.

Motors are connected to a power line, and may get hot. If a flammable is placed near a motor, it may be ignited, catch fire, or explode.

- Be sure to ground a motor frame.

To avoid electric shocks, be sure to connect the grounding terminal in the terminal box to the grounding terminal of the machine.

- Do not ground a motor power wire terminal or short-circuit it to another power wire terminal.

A failure to observe this caution may cause electric shocks or a burned wiring.

* Some motors require a special connection such as a winding changeover. Refer to their respective motor specification manuals for details.

⚠ WARNING

- Connect power wires securely so that they will not get loose.

Securely connect power wires and short bars to the terminal block with the specified tightening torque according to the procedures described in this manual. If a motor runs with a wire loosely connected, the terminal block may get abnormally hot, resulting in a fire. The wire may also be disconnected, resulting in a ground fault, short circuit, or electric shock.

- Do not supply the power to the motor while any terminal is exposed.

A failure to observe this caution is very dangerous because you may get electric shocks if your body or any conductive stuff touches an exposed terminal.

- Do not get close to a rotary section of a motor when it is rotating.

A rotating part may catch your cloths or fingers. Before starting a motor, ensure that there is no stuff that can fly away (such as a key) on the motor.

- Before touching a motor, shut off the power to it.

Even if a motor is not rotating, there may be a voltage across the terminals of the motor.
Especially before touching a power supply connection, take sufficient precautions.
Otherwise you may get electric shocks.

- Do not touch any terminal of a motor for a while (at least 5 minutes) after the power to the motor is shut off.

High voltage remains across power line terminals of a motor for a while after the power to the motor is shut off. So, do not touch any terminal or connect it to any other equipment. Otherwise, you may get electric shocks or the motor and/or equipment may get damaged.

- To drive a motor, use a specified amplifier and parameters.

An incorrect combination of a motor, amplifier, and parameters may cause the motor to behave unexpectedly. This is dangerous, and the motor may get damaged.

- Do not touch a regenerative discharge unit for a while (at least 30 minutes) after the power to the motor is shut off.

A regenerative discharge unit may get hot when the motor is running.
Do not touch the regenerative discharge unit before it gets cool enough. Otherwise, you may get burned.

- Do not touch a motor when it is running or immediately after it stops.

A motor may get hot when it is running. Do not touch the motor before it gets cool enough. Otherwise, you may get burned.

- Be careful not get your hair or cloths caught in a fan.

Be careful especially for a fan used to generate an inward air flow.
Be careful also for a fan even when the motor is stopped, because it continues to rotate while the amplifier is turned on.

- Ensure that motors and related components are mounted securely.

If a motor or its component slips out of place or comes off when the motor is running, it is very dangerous.

1.3 CAUTION

⚠ CAUTION

- FANUC motors are designed for use with machines. Do not use them for any other purpose.

If a FANUC motor is used for an unintended purpose, it may cause an unexpected symptom or trouble. If you want to use a motor for an unintended purpose, previously consult with FANUC.

- Ensure that a base or frame on which a motor is mounted is strong enough.

Motors are heavy. If a base or frame on which a motor is mounted is not strong enough, it is impossible to achieve the required precision.

- Be sure to connect motor cables correctly.

An incorrect connection of a cable cause abnormal heat generation, equipment malfunction, or failure. Always use a cable with an appropriate current carrying capacity (or thickness). For how to connect cables to motors, refer to their
respective specification manuals.

- When connecting the power line to the terminal block of a motor, tighten the screw with the following torque:

Terminal size	Tightening torque
M4	1.1 N·m to 1.5 N·m
M5	2.0 N·m to 2.5 N·m
M6	3.5 N·m to 4.5 N·m
M8	8.0 N·m to 10 N·m
M10	15 N·m to 16 N·m

- When mounting a crimp terminal at the end of a power line to keep the insulation distance, always cover the crimping section of the crimp terminal with an insulating tube.

When an insulating cover is mounted on the terminal block, screw the power line, remount the cover in place, then use the motor.

- Ensure that motors are cooled if they are those that require forcible cooling.

If a motor that requires forcible cooling is not cooled normally, it may cause a failure or trouble. For a fan-cooled motor, ensure that it is not clogged or blocked with dust and dirt. For a liquid-cooled motor, ensure that the amount of the liquid is appropriate and that the liquid piping is not clogged. For both types, perform regular cleaning and inspection.

- When attaching a component having inertia, such as a pulley, to a motor, ensure that any imbalance between the motor and component is minimized.

If there is a large imbalance, the motor may vibrates abnormally, resulting in the motor being broken.

- Be sure to attach a key to a motor with a keyed shaft.

If a motor with a keyed shaft runs with no key attached, it may impair torque transmission or cause imbalance, resulting in the motor being broken.

1.4 NOTE

NOTE

- Do not step or sit on a motor.

If you step or sit on a motor, it may get deformed or broken. Do not put a motor on another unless they are in packages.

- When storing a motor, put it in a dry (non-condensing) place at room temperature (0 to 40 °C).

If a motor is stored in a humid or hot place, its components may get damaged or deteriorated. In addition, keep a motor in such a position that its shaft is held horizontal and its terminal box is at the top.

- Do not remove a nameplate from a motor.

If a nameplate comes off, be careful not to lose it. If the nameplate is lost, the motor becomes unidentifiable, resulting in maintenance becoming impossible. For a nameplate for a built-in spindle motor, keep the nameplate with the spindle.

- Do not apply shocks to a motor or cause scratches to it.

If a motor is subjected to shocks or is scratched, its components may be adversely affected, resulting in normal operation being impaired. Be very careful when handling plastic portions, sensors, and windings, because they are very liable to break. Especially, avoid lifting a motor by pulling its plastic portion, winding, or power cable.

- Do not conduct dielectric strength or insulation test for a sensor.

Such a test can damage elements in the sensor.

- When testing the winding or insulation resistance of a motor, satisfy the conditions stipulated in IEC60034.

Testing a motor under a condition severer than those specified in IEC60034 may damage the motor.

- Do not disassemble a motor.

Disassembling a motor may cause a failure or trouble in it.
If disassembly is in need because of maintenance or repair, please contact a service representative of FANUC.

- Do not modify a motor.

Do not modify a motor unless directed by FANUC. Modifying a motor may cause a failure or trouble in it.

- Use a motor under an appropriate environmental condition.

Using a motor in an adverse environment may cause a failure or trouble in it. Refer to their respective specification manuals for details of the operating and environmental conditions for motors.

NOTE

- Do not apply a commercial power source voltage directly to a motor.

Applying a commercial power source voltage directly to a motor may result in its windings being burned. Be sure to use a specified amplifier for supplying voltage to the motor.

- For a motor with a terminal box, make a conduit hole for the terminal box in a specified position.

When making a conduit hole, be careful not to break or damage unspecified portions. Refer to an applicable specification manual.

- Before using a motor, measure its winding and insulation resistances, and make sure they are normal.

Especially for a motor that has been stored for a prolonged period of time, conduct these checks. A motor may deteriorate depending on the condition under which it is stored or the time during which it is stored. For the winding resistances of motors, refer to their respective specification manuals, or ask FANUC. For insulation resistances, see the following table.

- To use a motor as long as possible, perform periodic maintenance and inspection for it, and check its winding and insulation resistances.

Note that extremely severe inspections (such as dielectric strength tests) of a motor may damage its windings. For the winding resistances of motors, refer to their respective specification manuals, or ask FANUC. For insulation resistances, see the following table.

MOTOR INSULATION RESISTANCE MEASUREMENT

Measure an insulation resistance between each winding and motor frame using an insulation resistance meter (500 VDC). Judge the measurements according to the following table.

Insulation resistance	Judgment
100 MΩ or higher	Acceptable
10 to 100 MΩ	The winding has begun deteriorating. There is no problem with the performance at present. Be sure to perform periodic inspection.
1 to 10 MΩ	The winding has considerably deteriorated. Special care is in need. Be sure to perform periodic inspection.
Lower than 1 MΩ	Unacceptable. Replace the motor.

PREFACE

This manual describes the specifications and characteristics of the β*i*s series servo motors. The manual consists of the following chapters:

I. Specifications for the β*i*s series

This Part provides a general description of the β*i*s series, including how to use the series and how to select a motor. This Part also provides the specifications common to each model of the series, concerning the sensors and built-in brakes.

II. FANUC AC SERVO MOTOR β*i*s series

This Part explains how to specify a certain β*i*s series servo motor and provides specifications, dimensions, and data sheets for the entire range of β*i*s series servo motors.

Although this manual provides information on motor power line and sensor signal outputs, it does not describe connection to a servo amplifier or NC.
For details of these connections, refer to the following manuals :
FANUC SERVO AMPLIFIER α*i* series Descriptions (B-65282EN)
FANUC AC SERVO MOTOR α*i*s/α*i* series Maintenance Manual (B-65285EN)
FANUC SERVO AMPLIFIER β*i* series Descriptions (B-65322EN)
FANUC AC SERVO MOTOR β*i*s series Maintenance Manual (B-65325EN)

Related manuals

The following seven kinds of manuals are available for FANUC SERVO MOTOR β*i*s series. In the table, this manual is marked with an asterisk (*).

Document name	Document number	Major contents	Major usage	
FANUC AC SERVO MOTOR β*i*s series DESCRIPTIONS	B-65302EN	Specification Characteristics External dimensions Connections	Selection of motor Connection of motor	*
FANUC SERVO AMPLIFIER α*i* series DESCRIPTIONS	B-65282EN	Specifications and functions Installation External dimensions and maintenance area Connections	Selection of amplifier Connection of amplifier	
FANUC SERVO AMPLIFIER β*i* series DESCRIPTIONS	B-65322EN	Specifications and functions Installation External dimensions and maintenance area Connections	Selection of amplifier Connection of amplifier	
FANUC AC SERVO MOTOR α*i*s series FANUC AC SERVO MOTOR α*i* series FANUC AC SPINDLE MOTOR α*i* series FANUC SERVO AMPLIFIER α*i* series MAINTENANCE MANUAL	B-65285EN	Start up procedure Troubleshooting Maintenance of motor	Start up the system (Hardware) Troubleshooting Maintenance of motor	
FANUC AC SERVO MOTOR β*i*s series FANUC AC SPINDLE MOTOR β*i* series FANUC SERVO AMPLIFIER β*i* series MAINTENANCE MANUAL	B-65325EN	Start up procedure Troubleshooting Maintenance of motor	Start up the system (Hardware) Troubleshooting Maintenance of motor	
FANUC AC SERVO MOTOR α*i*s series FANUC AC SERVO MOTOR α*i* series FANUC AC SERVO MOTOR β*i*s series PARAMETER MANUAL	B-65270EN	Initial setting Setting parameters Description of parameters	Start up the system (Software) Tuning the system (Parameters)	

TABLE OF CONTENTS

SAFETY PRECAUTIONS s-1
PREFACE p-1

I. SPECIFICATIONS FOR THE βis SERIES

1 GENERAL 3
1.1 FEATURE 4
1.2 LINEUP OF THE SERIES 5

2 HOW TO USE SERVO MOTORS 6
2.1 USE ENVIRONMENT FOR SERVO MOTORS 7
2.1.1 Ambient Environment 7
2.1.2 Checking a Delivered Servo Motor and Storing a Servo Motor 10
2.1.3 Separating and Disposing of a Servo Motor 11
2.2 CONNECTING A SERVO MOTOR 12
2.2.1 Applicable Amplifiers 12
2.2.2 Connections Related to a Servo Motor 13
2.2.3 Connector 15
2.2.3.1 Connectors on the motor side 15
2.2.3.2 Connectors on the cable side (for signal : models β0.2*is* and β0.3*is*) 17
2.2.3.3 Connectors on the cable side (for signal : models β0.4*is* to β22*is*) 18
2.2.3.4 Connectors on the cable side (for power and brake : models β0.2*is* and β0.3*is*) 20
2.2.3.5 Connectors on the cable side (for power and brake : models β0.4*is* to β1*is*) 21
2.2.3.6 Connectors on the cable side (for power and brake : models β2*is* and β4*is*) 22
2.2.3.7 Connectors on the cable side (for power : models β8*is* to β22*is*) 23
2.2.3.8 Connectors on the cable side (for brake : models β8*is* to β22*is*) 26
2.2.3.9 Connection to a conduit hose 27
2.3 COUPLING A SERVO MOTOR 28
2.3.1 Coupling a Servo Motor and Machine 28
2.3.2 Allowable Axis Load for a Servo Motor 32
2.3.3 Axis Run-out Precision of a Servo Motor 33
2.3.4 Machine Movement per 1 Revolution of Motor Shaft 34
2.3.5 Precautions for Using Linear Axis Feedback 35
2.3.6 Cautions in Mounting a Servo Motor 37

3 SELECTING A MOTOR 40
3.1 CONDITIONS FOR SELECTING A SERVO MOTOR 41
3.2 SELECTING A MOTOR 44
3.2.1 Calculating the Load Torque 45

3.2.2 Calculating the Motor Speed 47
3.2.3 Calculating the load inertia 48
3.2.4 Calculating the Acceleration Torque 52
3.2.4.1 Calculating acceleration torque 52
3.2.4.2 Calculating the torque required by the motor shaft in acceleration 55
3.2.5 Calculating the Root-mean-square Value of the Torques 57
3.2.6 Calculating the Percentage Duty Cycle and ON Time with the Maximum Cutting Torque 59
3.2.7 Calculating the Dynamic Brake Stop Distance 61
3.3 HOW TO FILL IN THE SERVO MOTOR SELECTION DATA TABLE 64
3.3.1 Servo Motor Selection Data Table 64
3.3.2 Explanation of Items 67
3.3.2.1 Title 67
3.3.2.2 Specifications of moving object 68
3.3.2.3 Mechanical specifications 70
3.3.2.4 Motor specifications and characteristics 73
3.4 CHARACTERISTIC CURVE AND DATA SHEET 75
3.4.1 Performance Curves 75
3.4.2 Data Sheet 78
4 CONDITIONS FOR APPROVAL RELATED TO THE IEC60034 STANDARD 81
4.1 TYPES OF MOTORS TO BE APPROVED 82
4.2 APPROVED SPECIFICATIONS 83
4.2.1 Motor Speed (IEC60034-1) 83
4.2.2 Output (IEC60034-1) 83
4.2.3 Protection Type (IEC60034-5) 84
4.2.4 Cooling Method (IEC60034-6) 84
4.2.5 Mounting Method (IEC60034-7) 84
4.2.6 Heat Protection (IEC60034-11) 85
4.2.7 Grounding (IEC60204-1) 85
4.2.8 Remarks 85
4.3 CONNECTORS REQUIRED FOR APPROVAL 86
4.3.1 Power Line Connectors (for Models β0.2*i*s and β0.3*i*s) 86
4.3.2 Power Line Connectors (for Models β0.4*i*s to β1*i*s) 86
4.3.3 Power Line Connectors (for Models β2*i*s to β3*i*s) 87
4.3.4 Power Line Connectors (for Models β8*i*s to β22*i*s) 88
5 FEEDBACK SENSOR 89
5.1 PULSECODER 90

5.1.1 Types of Pulsecoders and Designation 90
5.1.2 Connecting a Pulsecoder 91
5.1.3 Absolute-type Pulsecoder 92
5.2 SEPARATE PULSECODER 93
5.2.1 Separate Pulsecoder Type and Designation 93
5.2.2 Separate Pulsecoder Specifications 93
5.2.3 Connecting a Separate Type Pulsecoder 94
5.2.4 Outline Drawings of Separate Pulsecoder 95
5.2.5 Cautions in Using a Separate Type Pulsecoder 96
6 BUILT-IN BRAKE 97
6.1 BRAKE SPECIFICATIONS 98
6.2 CONNECTING A BRAKE 99
6.2.1 Layout of Connector Pins 99
6.2.2 Connection of the Brakes 101
6.2.3 Recommended Parts in Brake Circuits 102
6.3 CAUTIONS 103
6.4 REDUCING THE BRAKE SHAFT FALL AMOUNT 104

II. FANUC AC SERVO MOTOR βis SERIES

1 TYPES OF MOTORS AND DESIGNATION 107
2 SPECIFICATIONS AND CHARACTERISTICS 109
2.1 COMMON SPECIFICATIONS 110
2.2 CHARACTERISTIC CURVE AND DATA SHEET 112
3 OUTLINE DRAWINGS 123
4 CONNECTION OF POWER LINE 144

I. SPECIFICATIONS FOR THE β*i*s SERIES

1 GENERAL

1.1 FEATURE

The FANUC AC servo motor β*i*s series is an AC servo motor suitable for feed axes and peripherals of machine tools, and industrial machines. This servo motor realizes high cost-performance when combined with a small-capacity amplifier. This series has the following features:

Compactness

By employing a most advanced high-performance magnet and optimized structure, the SERVO MOTOR β*i*s series is made shorter and compact in overall size.

Smooth rotation

The optimized magnetic pole structure enables smooth rotation to give sufficient basic performance for feed axes in machine tools to this series. (β2*i*s to β22*i*s)

Quick acceleration

Its original rotor shape allows high torque for this small-size light-weight servo motor to give quick acceleration performance to the motor.

High reliability

A totally-enclosed, friction-free brushless design is used. This allows the servo motors to be used in demanding environments with no need for special checks or maintenance.

High environmental resistance

The protection degree is IP65 as standard, ensuring high environmental resistance.

Built-in high-resolution pulsecoder

This series contains a compact high-resolution β*i* series pulsecoder (optical encoder), ensuring high-precision positioning. (Resolution: 65,536/rev., 131,072/rev.)

Intelligent functions

Intelligent functions for ID and thermal information are supported to improve maintainability.



β*i*s series

1.2 LINEUP OF THE SERIES

The FANUC AC Servo Motor βiS series consist of the following series, each of which has the listed characteristics.

Series	Torque (N·m)	Feature	Applications
βiS	0.2 to 20	High cost-performance model driven by a small-capacity amplifier	Feed axes in machine tools Peripherals of machine tools Industrial machines

Lineup

Torque [N·m]	0.2	0.3	0.4	0.5	1	2	4	8	12	20
Flange	□40		□60			□90		□130		□174
βiS	β0.2 /5000iS	β0.3 /5000iS	β0.4 /5000iS	β0.5 /5000iS	β1 /5000iS	β2 /4000iS	β4 /4000iS	β8 /3000iS	β12 /3000iS	β22 /2000iS

2 HOW TO USE SERVO MOTORS

This chapter describes the limitation on the environment in which the FANUC AC servo motor βis series is used, how to connect the servo motor to the CNC system, and how to install the servo motor in the machine.

2.1 USE ENVIRONMENT FOR SERVO MOTORS

2.1.1 Ambient Environment

Ambient temperature

The ambient temperature should be 0°C to 40°C. To operate this series in an ambient temperature higher than the above, the use conditions must be relaxed so that the motor or Pulsecoder does not overheat. (The values in the data sheet are determined for an ambient temperature of 20°C.)

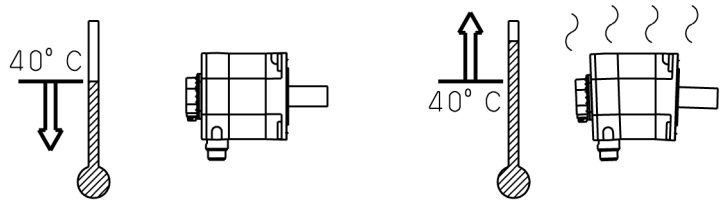

Ambient humidity

The ambient humidity should be 80%RH or less and no condensation should not be caused.

Vibration

When installed in a machine, the vibration applied to the motor must not exceed 5G.

Installation height

Up to 1,000 meters above the sea level requires, no particular provision for attitude. When operating the machine at a higher level, special care is unnecessary if the ambient temperature is lowered 1°C at every 100m higher than 1,000m. For example, when the machine is installed at a place of 1,500 meters above sea level, there is no problem if the ambient temperature is 35°C or less. For higher temperatures, it is necessary to limit the output power.

If any one of the four environmental conditions specified above is not satisfied, the output must be restricted.

Drip-proof environment

The level of motor protection is such that a single motor unit can satisfy IP65 of the IEC standard. However, this standard relates only to short-term performance. So, note the following when using the motor in actual applications:

- Protect the motor surface from the cutting fluid or lubricant. Use a cover when there is a possibility of wetting the motor surface. Only the telescopic cover of the sliding part can not completely prevent leakage of the cutting fluid. Pay attention to the drop along the structure body, too.

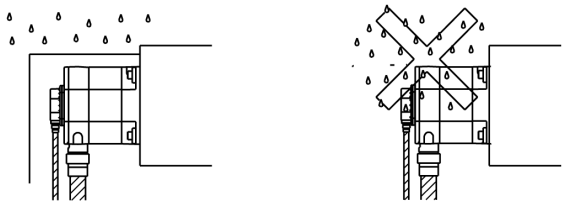

- Prevent the cutting fluid from being led to the motor through the cable. When the motor connector is used in the up position, put a drip loop in the cable.

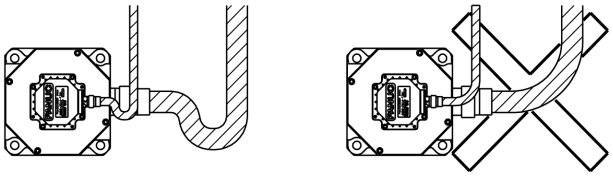

- When the motor connector is up, the cutting fluid is collected in the cable connector through the cable. Turn the motor connector sideways or downward as far as possible. Most of the defects caused by the cutting fluid have occurred in the cable connector.
  The standard receptacle on the motor side is waterproof.
  It there is a possibility that the cable connector gets wet, it is desirable to use a waterproof connector plug recommended in Subsection I-2.2.3, "Connector." (The standard MS plug is not waterproof; water is liable to enter the pin section.)

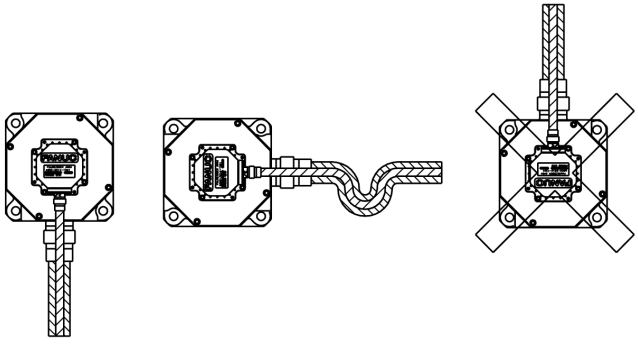

Oil seal section requirements

The motor shaft is sealed to prevent penetration of oil into the motor housing.
However, sealing may not be perfect under severe working conditions.
When oil bath lubrication is provided for the gear engagement, for example, the oil level must be below the lip of the shaft's oil seal. Set the oil level so that oil merely splashes the lip. Thus, as the shaft rotates, the oil seal can repel oil. If, however, pressure is applied continuously while the shaft is stopped, oil may penetrate the lip. When the shaft is always immersed in oil, for example, under the condition that the motor is to be used with the shaft oriented vertically a special design is required. For example, another oil seal could be installed on the machine side, and a drain provided so that oil penetrating that seal can drain off.
When grease is used for lubrication, the oil seal characteristics are usually lost.
In either case, ensure that no pressure is applied to the oil seal lip.

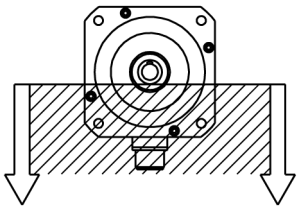

The motor shaft oil seal diameter is as shown below.

Motor mode	Oil seal diameter
β0.2/5000*i*s β0.3/5000*i*s	ϕ8 [mm]
β0.4/5000*i*s β0.5/5000*i*s β1/5000*i*s	ϕ14.9 [mm]
β2/4000*i*s β4/4000*i*s	ϕ15 [mm]
β8/3000*i*s β12/3000*i*s	ϕ24 [mm]
β22/2000*i*s	ϕ35[mm]

2.1.2 Checking a Delivered Servo Motor and Storing a Servo Motor

When the servo motor is delivered, check the following items.

- The motor meets the specifications.
  (Specifications of the model/shaft/sensor)
- Damage caused by the transportation.
- The shaft is normal when rotated by hand.
- The brake works.
- Looseness or play in screws.

FANUC servo motors are completely checked before shipment, and the inspection at acceptance is normally unnecessary. When an inspection is required, check the specifications (wiring, current, voltage, etc.) of the motor and sensor. Store the motor indoors. The storage temperature is -20°C to +60°C. Avoid storing in the following places.

- Place with high humidity so condensation will form.
- Place with extreme temperature changes.
- Place always exposed to vibration.
  (The bearing may be damaged.)
- Place with much dust.

2.1.3 Separating and Disposing of a Servo Motor

For a servo motor, a plastic part is used.
Disassemble the motor as shown in the following figure, separate the plastic part (Pulsecoder cover), and dispose of the motor. The following plastic material is used:

Plastic material : > (PBT+PC)-GF(30)FR(17)<

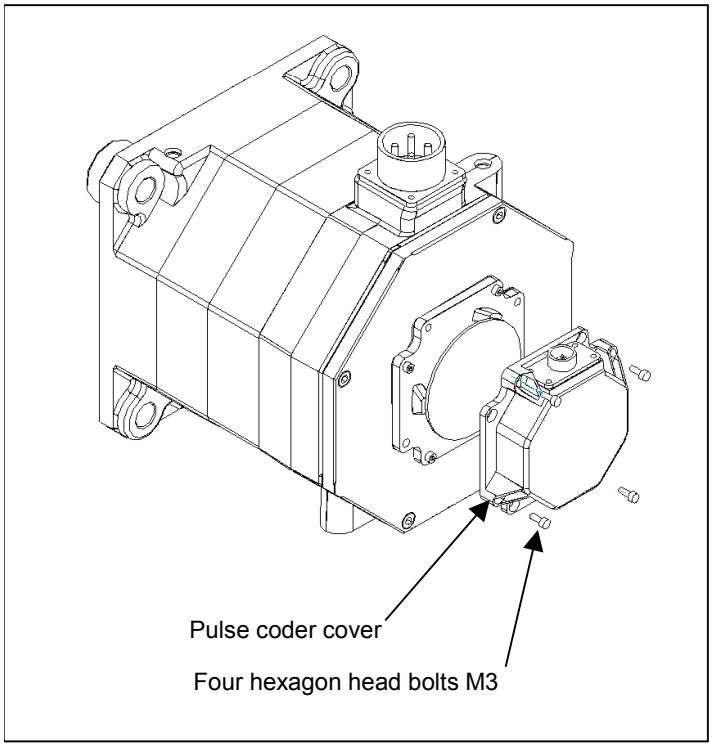

2.2 CONNECTING A SERVO MOTOR

2.2.1 Applicable Amplifiers

The FANUC AC Servo Motor β*i*s series can be driven using FANUC Servo Amplifier α*i* series or FANUC Servo Amplifier β*i* series.

α*i* series servo amplifier module (SVM)

Amplifier model		Axis \ Motor model	β0.2 /5000*i*s (4A)	β0.3 /5000*i*s (4A)	β0.4 /5000*i*s (20A)	β0.5 /5000*i*s (20A)	β1 /5000*i*s (20A)	β2 /4000*i*s (20A)	β4 /4000*i*s (20A)	β8 /3000*i*s (20A)	β12 /3000*i*s (40A)	β22 /2000*i*s (40A)
1-axis	SVM1-20*i*	-			O	O	O	O	O	O		
	SVM1-40*i*	-									O	O
2-axis	SVM2-4/4*i*	L/M	O	O								
	SVM2-20/20*i*	L/M			O	O	O	O	O	O		
	SVM2-20/40*i*	L			O	O	O	O	O	O		
		M									O	O
	SVM2-40/40*i*	L/M									O	O
	SVM2-40/80*i*	L									O	O
3-axis	SVM3-4/4/4*i*	L/M/N	O	O								
	SVM3-20/20/20*i*	L/M/N			O	O	O	O	O	O		
	SVM3-20/20/40*i*	L/M			O	O	O	O	O	O		
		N									O	O

β*i* series servo amplifier module (SVM)

Amplifier model		Axis \ Motor model	β0.2 /5000*i*s (4A)	β0.3 /5000*i*s (4A)	β0.4 /5000*i*s (20A)	β0.5 /5000*i*s (20A)	β1 /5000*i*s (20A)	β2 /4000*i*s (20A)	β4 /4000*i*s (20A)	β8 /3000*i*s (20A)	β12 /3000*i*s (40A)	β22 /2000*i*s (40A)
1-axis	SVM1-4*i*	-	O	O								
	SVM1-20*i*	-			O	O	O	O	O	O		
	SVM1-40*i*	-									O	O

β*i* series servo spindle amplifier module (SVPM)

Amplifier model		Axis \ Motor model	β2 /4000*i*s (20A)	β4 /4000*i*s (20A)	β8 /3000*i*s (20A)	β12 /3000*i*s (40A)	β22 /2000*i*s (40A)
2-axis	SVPM2-5.5*i*	L/M	O	O	O		
	SVPM2-11*i*	L/M	O	O	O		
	SVPM2-15*i*	L/M	*	*	*	O	O
3-axis	SVPM3-5.5*i*	L/M	O	O	O		
		N	*	*	*	O	O
	SVPM3-11*i*	L/M	O	O	O		
		N	*	*	*	O	O
	SVPM3-15*i*	L/M/N	*	*	*	O	O

⚠ CAUTION

1 If a motor is used in a combination other than those listed above, it may become broken.
2 The β*i* series servo spindle amplifier modules (SVPMs) can be connected only to the following CNCs:
FANUC Series 0*i*-MODEL B and FANUC Series 0*i* Mate-MODEL B
3 Some β*i* series servo spindle amplifier modules (SVPMs) can drive motors marked with an asterisk (*) by changing the related servo parameters.

2.2.2 Connections Related to a Servo Motor

For the FANUC AC Servo Motor β*i*s series, connect the power line of the motor and the signal line of a Pulsecoder to an FANUC Servo Amplifier. When the motor has a built-in brake or cooling fan as an option, connect the built-in brake or cooling fan to the specified power supply.

Connection diagram

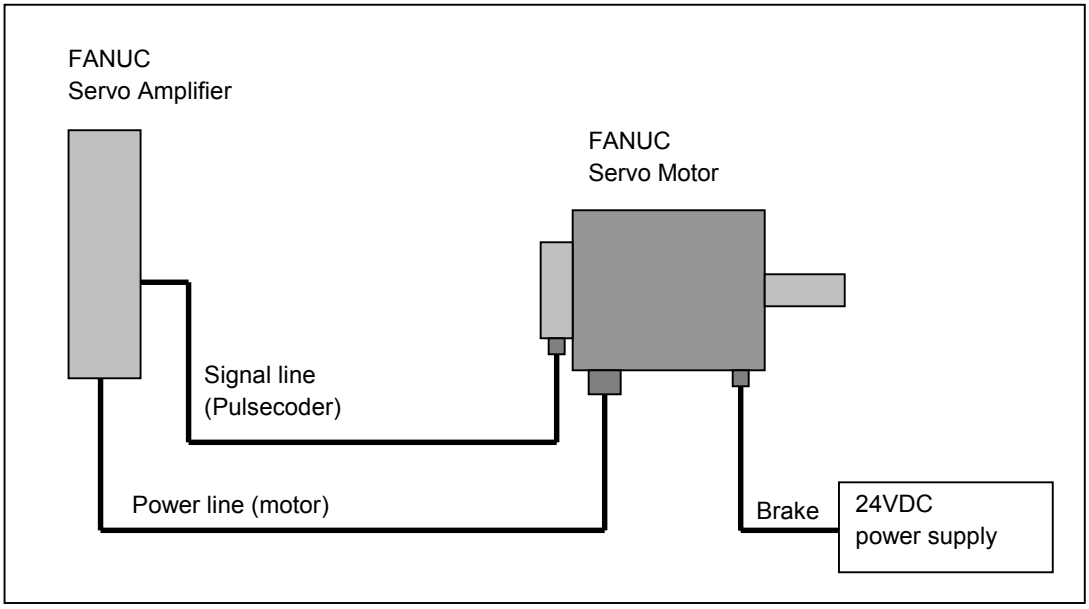

Connecting the power line

For details of how to connect the power connector or terminal box on the servo motor side, see "Connecting the Power Line" in Parts II and afterward in this manual.
For details of the connector of a cable connected to the servo motor, see Subsection I-2.2.3, "Connector," in this manual.
For details of selection of a power line and the shapes of the connector and terminal connected to a servo amplifier, refer to "FANUC SERVO AMPLIFIER α*i* series Descriptions (B-65282EN)" and "FANUC SERVO AMPLIFIER β*i* series Descriptions (B-65322EN)."

> ⚠ **WARNING**
> Securely connect power wires and short bars to the terminal block with the specified tightening torque according to the procedures described in this section. If a motor runs with a wire loosely connected, the terminal block may get abnormally hot, resulting in a fire. The wire may also be disconnected, resulting in a ground fault, short circuit, or electric shock.

Connecting the signal line

For details of the signal connector on a Pulsecoder, see Subsection I-5.1.2, "Connecting a Pulsecoder."
For details of the connector of a cable connected to a Pulsecoder, see Subsection I-2.2.3, "Connector," in this manual.
For details of selection of a signal line and the connector connected to a servo amplifier, refer to "FANUC SERVO AMPLIFIER αi series Descriptions (B-65282EN)" and "FANUC SERVO AMPLIFIER βi series Descriptions (B-65322EN)."

Connecting a built-in brake

For details of how to connect the power connector on a built-in brake and the power supply, see Section I-6.2, "CONNECTING A BRAKE."
For details of the connector of a cable connected to a built-in brake, see Subsection I-2.2.3, "Connector," in this manual.

2.2.3 Connector

2.2.3.1 Connectors on the motor side

For the FANUC AC Servo Motor β*i*s series, a TÜV-approved connector is used as the power line connector to meet the IEC60034 standard.

The power connector for β0.2*i*s and β0.3*i*s is not dripproof.

The power connectors for β0.4*i*s to β4*i*s are dripproof when engaged with the cable connector.

As the power connectors for β8*i*s to β22*i*s, receptacle connectors, which are dripproof by themselves (when not engaged), are used as standard. The power connectors for β8*i*s and β22*i*s are compatible with MS standard round connectors when used, though they do not strictly conform to the MS standard.

The signal connector for β0.2*i*s and β0.3*i*s is not dripproof.

The signal connector for β0.4*i*s to β22*i*s is dripproof when engaged with the cable connector. (When the motor is left singly, the connector is dripproof when the cap mounted at shipment is fit on it.)

Connectors for β0.2*i*s and β0.3*i*s

Motor Type	For Power	For Signal	For Brake
β0.2/5000*i*s β0.3/5000*i*s	3-179554-3 (Tyco Electronics AMP)	1-1318115-6 (Tyco Electronics AMP)	Common to connector for power

Connectors for β0.4*i*s to β1*i*s

Motor Type	For Power	For Signal	For Brake
β0.4/5000*i*s β0.5/5000*i*s β1/5000*i*s	55618-0401 (MOLEX JAPAN Co., Ltd.)	JN2AS10UL1 (Japan Aviation Electronics Industry)	55619-0401 (MOLEX JAPAN Co., Ltd.)

Connectors for β2*i*s and β4*i*s

Motor Type	For Power	For Signal	For Brake
β2/4000*i*s β4/4000*i*s	1473060-2 (Tyco Electronics AMP)	JN2AS10UL1 (Japan Aviation Electronics Industry)	Included in the power line connector.

Connectors for β8*i*s and β12*i*s

Motor Type	For Power	For Signal	For Brake
β8/3000*i*s β12/3000*i*s	H/MS3102A18-10P-D-T(10) (Hirose Electric)	JN2AS10UL1 (Japan Aviation Electronics Industry)	JN2AS04MK2 (Japan Aviation Electronics Industry)

Connectors for β22*i*s

Motor Type	For Power	For Signal	For Brake
β22/2000*i*s	JL04HV-2E22-22PE-BT (Japan Aviation Electronics Industry)	JN2AS10UL1 (Japan Aviation Electronics Industry)	JN2AS04MK2 (Japan Aviation Electronics Industry)

⚠ CAUTION

1 The motors should be installed with their connector facing downward as long as possible. When it is impossible to install a motor in this position, allow slack in the cable to keep liquids such as a dielectric fluid from going along the cable into the cable or motor. If there is a possibility that the motors and connectors get wet, provide a cover to protect them.

2 If a motor is not connected to the earth ground through the machine (frame), connect the motor grounding point and the amplifier grounding point to absorb noise using a 1.25 mm^2 or larger conductor other than the grounding conductor in the power cable. Keep the grounding conductor as far from the power cable as possible.

2.2.3.2 Connectors on the cable side (for signal : models β0.2*i*s and β0.3*i*s)

The signal connector on the cable side for β0.2*i*s and β0.3*i*s is not dripproof. To connect the cable, a dedicated crimping tool must be used. Consider crimping, cable clamp, and voltage drop. Also note that there are restrictions.

		For signal		
Housing specification (Tyco Electronics AMP)		1-1318118-6 (D-2100D 12-position receptacle housing)		
Contact specifications (Tyco Electronics AMP)		1318107-1 (D-2 receptacle contact M)		1318108-1 (D-2 receptacle contact S)
	Applicable wire size	0.18 to 0.5 mm^2	0.3 to 0.85 mm^2	0.08 to 0.2 mm^2
	Insulation external diameter	ϕ0.88 to 1.5 mm	ϕ1.1 to 1.87 mm	ϕ0.88 to 1.5 mm
	Applicable crimping tool	1463475-1 (Dedicated crimping tool)	1276654-1 (D-2 M standard tool)	1276653-1 (D-2 S standard tool)

The following signal connector kit is available:

	For signal
Connector kit specification (FANUC specification)	A06B-6114-K241
Contents of the connector kit	Receptacle housing (1-1318118-6)×1 Receptacle contact D-2 M (1318107-1)×12

The following dedicated tools are required for this connector.

	Applicable contact	Tyco Electronics AMP specification	FANUC specification
Crimping tool	D-2 contact size M (Dedicated crimping tool for which the applicable wire size is 0.18 to 0.5 mm^2.)	1463475-1	A06B-6114-K242
	D-2 contact size M	1276654-1	A06B-6110-K220#D2M
	D-2 contact size S	1276653-1	-
Extractor	D-2 contact	1276716-1	A06B-6110-K220#D2R

NOTE
1 When you use the recommended wire (cable diameter of 0.18 to 0.5 mm^2) only with one D-2 size M contact, the above dedicated crimping tool is required.
Use a standard crimping tool for a D-2 contact within the applicable range, with checking the size of the wire to be used, contact type, and crimping tool specification.
2 The contacts are of the type which crimps the covering in addition to the wire. Follow the dimension of the insulation part listed above. An insulation of a diameter outside the above range may be able to be connected depending on the wire or tool, however. For details, contact the connector manufacturer.

2.2.3.3 Connectors on the cable side (for signal : models β0.4*i*s to β22*i*s)

The signal connectors on the cable side for β0.4*i*s to β22*i*s are dripproof when engaged with the motor connector. To connect the cable, a dedicated crimping tool must be used. Consider crimping, cable clamp, and voltage drop. Also note that there are restrictions.

<table>
<tr><th colspan="2"></th><th colspan="2">For signal</th></tr>
<tr><td rowspan="2">Connector specifications</td><td>Straight type</td><td colspan="2">JN2DS10SL1 or JN2DS10SL2 : Connector,
JN1-22-22S : Contact (Japan Aviation Electronics Industry)
A06B-6114-K204#S (FANUC specification) * Including the contact</td></tr>
<tr><td>Elbow type</td><td colspan="2">JN2FS10SL1 or JN2FS10SL2 : Connector,
JN1-22-22S : Contact (Japan Aviation Electronics Industry)
A06B-6114-K204#E (FANUC specification) * Including the contact</td></tr>
<tr><td colspan="2">Insulation external diameter</td><td colspan="2">ϕ1.5 or less</td></tr>
<tr><td colspan="2">Compatible cable O.D.</td><td colspan="2">ϕ5.7 to ϕ7.3 : JN2DS10SL1 or JN2FS10SL1
ϕ6.5 to ϕ8.0 : JN2DS10SL2 or JN2FS10SL2
* With the FANUC specifications, two types of bushings: for ϕ5.7 to ϕ7.3 and for ϕ6.5 to ϕ8.0 are included.</td></tr>
<tr><td rowspan="4">Used wire</td><td></td><td>Cable length : 28 m or less</td><td>Cable length : 50 m or less</td></tr>
<tr><td>5V,0V</td><td>0.3 $mm^2 \times 2$</td><td>0.5 $mm^2 \times 2$
(Strand configuration: 20/0.18 or 104/0.08)</td></tr>
<tr><td>6V</td><td>0.3 mm^2</td><td>0.5 mm^2
(Strand configuration: 20/0.18 or 104/0.08)</td></tr>
<tr><td>RD,*RD</td><td colspan="2">Twisted pair of at least 0.18 mm^2</td></tr>
<tr><td colspan="2" rowspan="3">Crimping tool</td><td>AWG#22(0.33mm^2) to AWG#24(0.2mm^2)
AWG#26(0.13mm^2) to AWG#28(0.08mm^2)</td><td>CT150-2-JN1-B
(Japan Aviation Electronics Industry)
(conventional specification)
A06B-6114-K201#JN1S
(FANUC specification)</td></tr>
<tr><td>AWG#21(0.5mm^2)
AWG#25(0.18mm^2)</td><td>CT150-2-JN1-F
(Japan Aviation Electronics Industry)
(conventional specification)
A06B-6114-K201#JN1L
(FANUC specification)</td></tr>
<tr><td>AWG#22(0.33mm^2) to AWG#24(0.2mm^2)
AWG#25(0.18mm^2)</td><td>CT150-2-JN1-C
(Japan Aviation Electronics Industry)
(new specification)</td></tr>
<tr><td colspan="2">Extractor</td><td colspan="2">ET-JN1(Japan Aviation Electronics Industry)
A06B-6114-K201#JN1R (FANUC specification)</td></tr>
</table>

The outside dimensions of each type of connector when engaged are shown below:

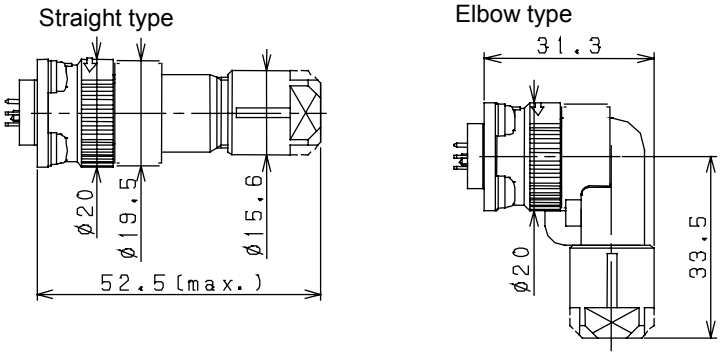

β0.4*i*s to β22*i*s

⚠ CAUTION

1 In case that the cable is prepared by MTB, total resistance of 5V and 0V must be less than 2Ω.

2 Pulsecoder side connector can accept maximum 0.5mm^2 (wire construction 20/0.18 or 104/0.08, diameter φ1.5 or less) wire and sheath diameter is φ5.7 to φ8.0. In case of using thicker wire or cable, take measures described below.

[Case 1] Cable conductor exceeds 0.5mm^2.

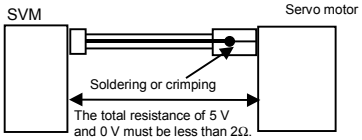

[Case 2] Sheath diameter of exceeds φ8.

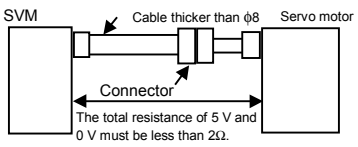

3 In case of incremental Pulsecoder, 6V is not necessary to be connected.

2.2.3.4 Connectors on the cable side (for power and brake : models β0.2*i*s and β0.3*i*s)

Dedicated connectors which are TÜV approved are available as the connector for power for the β0.2*i*s and β0.3*i*s.
The following subsection describes the specifications as a connector kit. These connectors are dripproof when engaged.
To connect the cable, a dedicated crimping tool must be used.
Consider crimping and cable clamp. Also note that there are restrictions.

		For power and brake
Housing specification (Tyco Electronics AMP)		3-178129-6 (D-3200M 6-position receptacle housing XY)
Contact specifications (Tyco Electronics AMP)		1-175218-2 (D-3 receptacle contact L)
	Applicable wire size	0.5 to 1.25 mm^2
	Insulation external diameter	ϕ1.8 to 2.8 mm

The following power and brake connector kit is available:

	For power and brake
Connector kit specifications (FANUC specification)	A06B-6114-K240
Contents of the connector kit	Receptacle housing(3-178129-6) × 1 Receptacle contact D-3 L (1-175218-2) × 6

The following dedicated tools are required for this connector.

	Applicable contact	**Tyco Electronics AMP specification**	**FANUC specification**
Crimping tool	D-3 contact size L	914596-3	A06B-6110-K220#D3L
Extractor	D-3 contact	234168-1	A06B-6110-K220#D3R

NOTE
The contacts are of the type which crimps the covering in addition to the wire. Follow the dimension of the insulation part listed above. An insulation of a diameter outside the above range may be able to be connected depending on the wire or tool, however. For details, contact the connector manufacturer.

2.2.3.5 Connectors on the cable side (for power and brake : models β0.4*i*s to β1*i*s)

Dedicated connectors which are TÜV approved are available as the connector for power for the β0.4*i*s to β1*i*s.
The following subsection describes the specifications as a connector kit. These connectors are dripproof when engaged.
To connect the cable, a dedicated crimping tool must be used.
Consider crimping and cable clamp. Also note that there are restrictions.

			For power	For brake
Connector body specifications (MOLEX JAPAN Co., Ltd.)		Straight type	54983-0000	54982-0000
		Elbow type	55765-0000	55766-0000
Contact specifications (MOLEX JAPAN Co., Ltd.)			56052-8100	
	Applicable wire size		0.75 to 1.05 mm^2 (AWG18 to AWG17)	
	Insulation external diameter		ϕ2.5 mm or less	
	Compatible cable O.D.		ϕ9.1 to ϕ9.8 mm	ϕ6.2 to ϕ6.7 mm

The following power and brake connector kit is available:

		For power	For brake
Connector kit specification (FANUC specification)	Straight type	A06B-6114-K230#S	A06B-6114-K232#S
	Elbow type	A06B-6114-K230#E	A06B-6114-K232#E
Contents of the connector kit		Connector body × 1 Contact × 4	Connector body × 1 Contact × 3

The following dedicated tools are required for this connector.

	MOLEX JAPAN Co., Ltd.	FANUC specification
Crimping tool	57406-5000	A06B-6114-K234#C
Extractor	57406-6000	A06B-6114-K234#R

NOTE
The contacts are of the type which crimps the covering in addition to the wire. Follow the dimension of the insulation part listed above. An insulation of a diameter outside the above range may be able to be connected depending on the wire or tool, however. For details, contact the connector manufacturer.

2.2.3.6 Connectors on the cable side (for power and brake : models β2*i*s and β4*i*s)

Dedicated connectors which are TÜV approved are available as the connector for power for the β2*i*s and β4*i*s. These connectors differ from the conventional α series connectors in connectors and contacts. The following subsection describes the specifications as a connector kit. These connectors are dripproof when engaged.
To connect the cable, a dedicated crimping tool must be used.
Consider crimping and cable clamp. Also note that there are restrictions.

		For power
Connector kit specifications (Including the contact)	Straight type (standard)	1473063-2 (Tyco Electronics AMP) A06B-6114-K220#S (FANUC specification)
	Elbow type (CAUTION 1)	1473393-2 (Tyco Electronics AMP) A06B-6114-K220#E (FANUC specification)
Applicable wire size (CAUTION 2)		AWG#18 to 16
Insulation external diameter (CAUTION 3)		φ1.8 to 2.8
Compatible cable O.D. (CAUTION 4)		φ9.9 to 11.4
Crimping tool (CAUTION 5)		91579-1 (Tyco Electronics AMP) A06B-6114-K221#C (FANUC specification)
Extractor (CAUTION 5)		1463329-1 (Tyco Electronics AMP) A06B-6114-K221#R (FANUC specification)

⚠ CAUTION
1 For the elbow type, a cable juts from the motor in a vertical direction. To connect a conduit hose to the connector, use the elbow type. (The straight type cannot be used due to dimensional restrictions.)
2 The contact is of the crimp type. Be careful of the applicable wire.
3 The crimping contact crimps the covering in addition to the wire. Follow the dimensions listed above.
An insulation of a smaller diameter may be able to be connected by a wire or tool, however. For details, contact Tyco Electronics AMP.
4 To satisfy the TÜV-approved and waterproof performance, a cable of an outside diameter within the applicable cable clamp range of φ9.9 to φ11.4 must be used.
5 Dedicated tools are required for crimping and extracting the contact. Keep them on hand when required.

2.2.3.7 Connectors on the cable side (for power : models β8*is* to β22*is*)

To meet the IEC60034 standard, TÜV-approved plug connectors and cable clamps should be used in connecting the power cable. To meet the IEC60034 standard by using a cable or conduit hose seal adapter, contact the manufacturer for details. FANUC can provide TÜV-approved types (waterproof) and waterproof types as plug connectors on the cable side for the FANUC β*is* series AC servo motors; all these connectors are black. Of course, conventional plug connectors may be used, because they are MS-compatible. The specifications of each connector are explained based on the examples shown below.

Example of connector connection

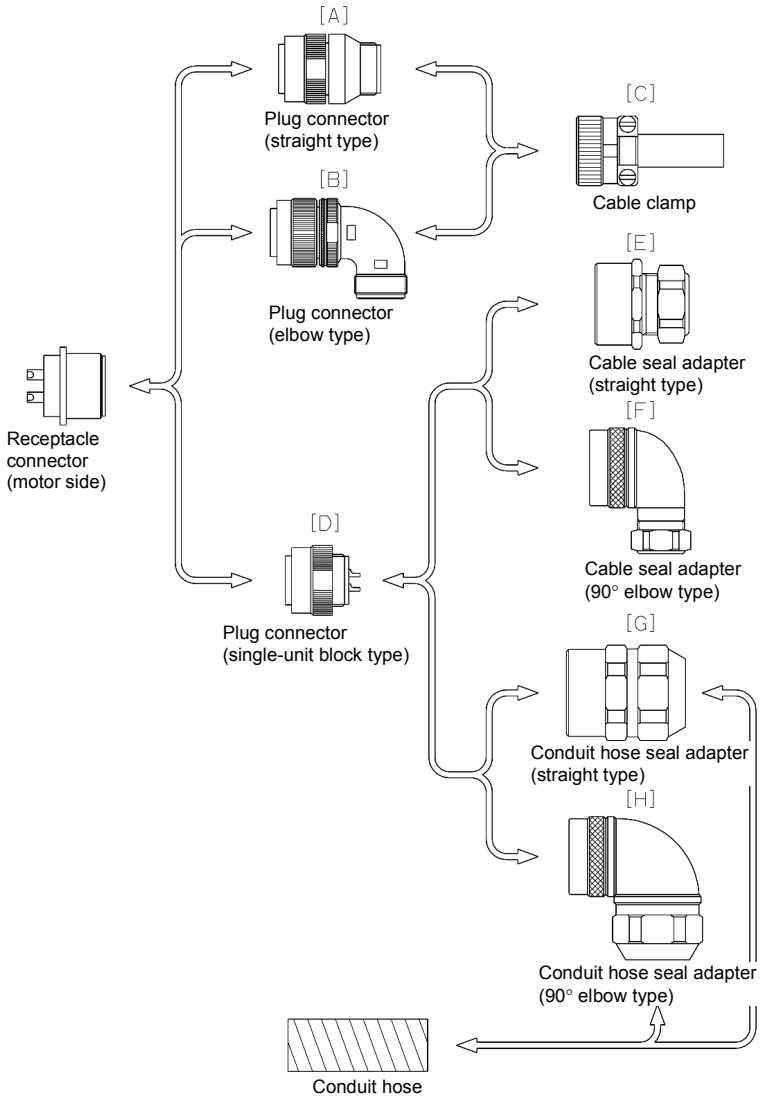

Specifications of plug connectors on the cable side (support for waterproof IP67, TÜV-approved type)

Specifications of Plug Connectors on the Cable Side (Waterproof TÜV-approved Type)

Model Name	[A] Straight Type Plug Connector	[B] Elbow Type Plug Connector	[C] Cable Clamp	[D] Single Block Type Plug Connector
For Power				
β8*is* β12*is*	H/MS3106A18-10S-D-T(10) (Hirose Electric)	H/MS3108A18-10S-D-T(10) (Hirose Electric)	H/MS3057-10A(10) (Hirose Electric)	H/MS3106A18-10S-D-T(13) (Hirose Electric)
	Solder pot diameter ϕ2.6	Solder pot diameter ϕ2.6	Compatible cable O.D. ϕ10.3 to ϕ14.3	Solder pot diameter ϕ2.6
β22*is*	<1> JL04V-6A22-22SE-EB <2> JL04V-6A22-22SE-EB1 (Japan Aviation Electronics Industry)	<1> JL04V-8A22-22SE-EB <2> JL04V-8A22-22SE-EB1 (Japan Aviation Electronics Industry)	<1> JL04-2022CK-(14) <2> JL04-2428CK-(20) (Japan Aviation Electronics Industry)	JL04V-6A22-22SE (Japan Aviation Electronics Industry)
	Solder pot diameter ϕ5.3	Solder pot diameter ϕ5.3	Compatible cable O.D. <1> ϕ12.9 to ϕ16.0 <2> ϕ18 to ϕ21	Solder pot diameter ϕ5.3

* For the connectors of size 22-22, the part number of the plug connector differs depending on the type of cable clamp.

* The items preceded by the same number in < > correspond to each other.

⚠ CAUTION

1 TÜV have certified that the plug connectors and cable clamps listed above, when combined with the FANUC AC Servo Motor β*is* series, satisfy the VDE0627 safety standard.
Several manufacturers offer other plug connectors. For information about whether the plug connectors satisfy the safety standard when combined with the FANUC α*i* series, contact the corresponding manufacturer. Also contact the manufacturers if you require details of their products.
For details, see Chapter 5, "CONDITIONS FOR APPROVAL RELATED TO THE IEC60034 STANDARD."
- Hirose Electric (HRS) : H/MS310 TÜV-conforming series
- Japan Aviation Electronics Industry (JAE) : JL04V series
- DDK Ltd. (DDK) : CE05 series

2 The signal connectors and 24-V brake connectors are not subject to the IEC60034 standard.

Specifications of plug connectors on the cable side (support for waterproof IP67)

Specifications of Plug Connectors on the Cable Side (Waterproof Type)

Model Name	[A] Straight Type Plug Connector	[B] Elbow Type Plug Connector	[C] Cable Clamp	[D] Single Block Type Plug Connector
For Power				
β8*i*S β12*i*S	JA06A-18-10S-J1-EB (Japan Aviation Electronics Industry) H/MS3106A18-10S(10) (Hirose Electric) MS3106A18-10S-B-BSS (DDK Ltd.)	JA08A-18-10S-J1-EB (Japan Aviation Electronics Industry) H/MS3108B18-10S(10) (Hirose Electric) MS3108A18-10S-B-BAS (DDK Ltd.)	JL04-18CK(13) (Japan Aviation Electronics Industry) H/MS3057-10A(10) (Hirose Electric) CE3057-10A-1(D265) (DDK Ltd.)	JA06A-18-10S-J1-(A72) (Japan Aviation Electronics Industry) H/MS3106A18-10S(13) (Hirose Electric) MS3106A18-10S-B(D190) (DDK Ltd.)
β22*i*S	JA06A-22-22S-J1-EB (Japan Aviation Electronics Industry) H/MS3106A22-22S(10) (Hirose Electric) MS3106A22-22S-B-BSS (DDK Ltd.)	JA08A-22-22S-J1-EB (Japan Aviation Electronics Industry) H/MS3108B22-22S(10) (Hirose Electric) MS3108A22-22S-B-BAS (DDK Ltd.)	JL04-2022CK-(14) (Japan Aviation Electronics Industry) H/MS3057-12A(10) (Hirose Electric) CE3057-12A-1(D265) (DDK Ltd.)	JA06A-22-22S-J1-(A72) (Japan Aviation Electronics Industry) H/MS3106A22-22S(13) (Hirose Electric) MS3106A22-22S-B(D190) (DDK Ltd.)

2.2.3.8 Connectors on the cable side (for brake : models β8*i*s to β22*i*s)

The models β8*i*s to β22*i*s use a dedicated connector to connect the built-in brake cable.
This connector is dripproof. It is connected by soldering, so no special tool is required.
Consider soldering, cable clamp, and voltage drop. Also note that there are restrictions.

Specifications of connectors for brake (models β8*i*s to β22*i*s)

		For brake
Connector specifications	Straight type	JN2DS04FK2 (Japan Aviation Electronics Industry) A06B-6114-K213#S (FANUC specification)
	Elbow type	JN2FS04FK2 (Japan Aviation Electronics Industry) A06B-6114-K213#E (FANUC specification)
Applicable wire size		AWG#16 or less (1.25mm^2 or less) * Solder pot diameter ϕ1.9
Insulation external diameter		ϕ2.7 or less
Compatible cable O.D.		ϕ6.5 to 8.0
Example of applicable wire		300-V two-conductor vinyl heavy-duty power cord cable VCTF (JIS C 3306) or equivalent
Applicable wire size and cable length		0.75mm^2 (AWG#18) when cable length 30 m or less 1.25mm^2 (AWG#16) when cable length 50 m or less

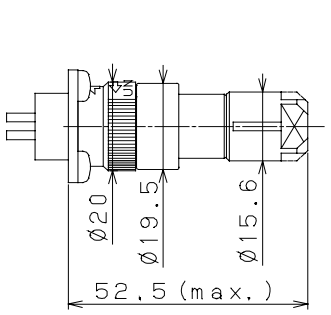

Straight type

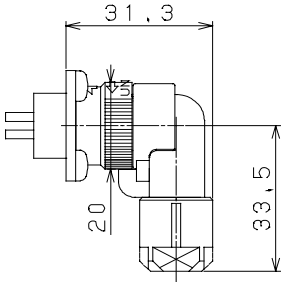

Elbow type

⚠ CAUTION
1 The same body is used for the brake and fan connectors. They differ in the key position to prevent an improper insertion.
2 If the cable length is longer than or equal to 50 m, take measures such as installation of repeaters so that the sum of wire resistance (for both ways) becomes 1.5Ω or less.
3 For details of brakes, see Chapter 6, "BUILT-IN BRAKE."

2.2.3.9 Connection to a conduit hose

This section gives information on the specifications of several adapters to be connected that are made by conduit hose manufacturers for reference purposes. Before using an adapter, contact the corresponding conduit hose manufacturer.

Specifications of plug connectors on the cable side (Waterproof type/seal adapter specifications)

Model Name	[E] Cable Seal adapter Straight type	[F] Cable Seal adapter Elbow type	[G] Conduit hose Seal adapter Straight type	[H] Conduit hose Seal adapter Elbow type
For power				
β2*i*S β4*i*S			N2BM20-FN4 (SANKEI) MAS-SG16-M20 (NEOFLEX)	
β8*i*S β12*i*S	CKD12-18 (SANKEI) YSO 18-12-14 (DAIWA DENGYOU) ACS-12RL-MS18F (NIPPON FLEX) CG12S-JL18 (NEOFLEX)	C90° KD12-18 (SANKEI) YLO 18-12-14 (DAIWA DENGYOU) ACA-12RL-MS18F (NIPPON FLEX) CG12A-JL18 (NEOFLEX)	KKD16-18 (SANKEI) MSA 16-18 (DAIWA DENGYOU) RCC-104RL-MS18F (NIPPON FLEX) MAS16S-JL18 (NEOFLEX)	K90° KD16-18 (SANKEI) MAA 16-18 (DAIWA DENGYOU) RCC-304RL-MS18F (NIPPON FLEX) MAS16A-JL18 (NEOFLEX)
β22*i*S	CKD16-22 (SANKEI) YSO 22-12-14 (DAIWA DENGYOU) ACS-16RL-MS22F (NIPPON FLEX) CG16S-JL22 (NEOFLEX)	C90° KD16-22 (SANKEI) YLO 22-12-14 (DAIWA DENGYOU) ACA-16RL-MS22F (NIPPON FLEX) CG16A-JL22 (NEOFLEX)	KKD22-22 (SANKEI) MSA 22-22 (DAIWA DENGYOU) RCC-106RL-MS22F (NIPPON FLEX) MAS22S-JL22 (NEOFLEX)	K90° KD22-22 (SANKEI) MAA 22-22 (DAIWA DENGYOU) RCC-306RL-MS22F (NIPPON FLEX) MAS22A-JL22 (NEOFLEX)
For signal				
Common to all models (other than β0.2*i*S and β0.3*i*S)			N2KY16-FN3 (SANKEI) PCJN-12-M13F (DAIWA DENGYOU) RQJN-M13-9 RQJN-M13-16 (NEOFLEX)	
For brake				
Common to all models (other than β0.2*i*S and β0.3*i*S)			N2KY16-FN3 (SANKEI) PCJN-12-M13F (DAIWA DENGYOU) RQJN-M13-9 RQJN-M13-16 (NEOFLEX)	

(*) Manufacture SANKEI : SANKEI MANUFACTURING CO.,LTD.
DAIWA DENGYOU : DAIWA DENGYOU CO.,LTD.
NIPPON FLEX : NIPPON FLEX CO.,LTD.
NEOFLEX

2.3 COUPLING A SERVO MOTOR

2.3.1 Coupling a Servo Motor and Machine

In many cases, the following four methods are used for coupling the motor shaft to the ball screw on a machine: Direct connection through a flexible coupling, direct connection through a rigid coupling, connection through gears, and connection through timing belts. It is important to understand the advantages and disadvantages of each method, and select one that is most suitable for the machine.

Direct connection using a flexible coupling

Direct connection by a flexible coupling has the following advantages over connection using gears:

- Even if the angle of the motor shaft to the ball screw changes, it can be compensated to a certain extent.
- Because a flexible coupling connects elements with less backlash, driving noise from joints can be significantly suppressed.

However, this method has the following disadvantages:

- The motor shaft and the ball screw must not slide from each other in the radial direction (for single coupling).
- Loose assembly may result in lower rigidity.

When the motor shaft needs to be connected directly to the ball screw, connecting them using a flexible coupling facilitates adjustment and installation of the motor.

To use a single coupling, the machine needs to be designed so that the centers of the motor shaft and the ball screw are aligned. (In the same way as with a rigid coupling, the use of a single coupling demands that there be almost no relative eccentricity between the axes.)

If it is difficult to align the centers, a double coupling needs to be employed.

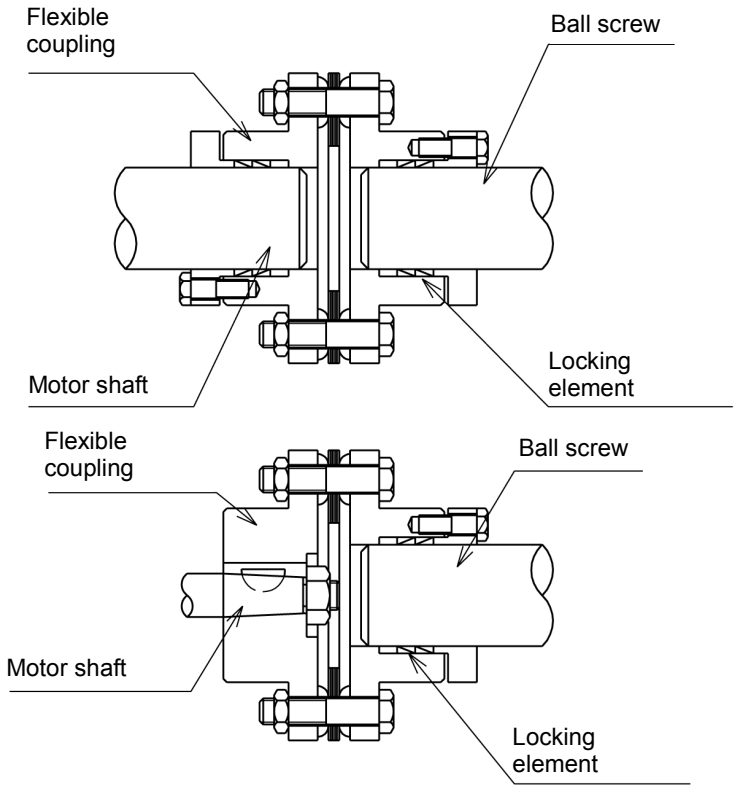

Direct connection using a rigid coupling

Direct connection using a rigid coupling has the following advantages over direct connection using a flexible coupling:

- More economical
- The coupling rigidity can be increased.
- If the rigidity is the same as with a flexible coupling, the inertia can be reduced.

However, this method has the following disadvantages:

- The motor shaft and the ball screw must not slide from each other in the radial direction, and the angle of the motor shaft to the ball screw must be fixed.

For this reason, a rigid coupling needs to be mounted very carefully.
It is desirable that the run-out of the ball screw is 0.01 mm or less. When a rigid coupling is used on the motor shaft, the run-out of the hole for the ball screw must be set to 0.01 mm or less by adjusting the tightness of the span ring.
The run-out of the motor shaft and the ball screw in the radial direction can be adjusted or compensated to a certain extent by deflection. Note, however, that it is difficult to adjust or measure changes in the angle. Therefore, the structure of the machine should be such that precision can be fully guaranteed.

Gears

This method is used when the motor cannot be put in line with the ball screw because of the mechanical interference problem or when the reduction gear is required in order to obtain large torque. The following attention should be paid to the gear coupling method:

- Grinding finish should be given to the gear, and eccentricity, pitch error, tooth-shape deviations etc. should be reduced as much as possible. Please use the JIS, First Class as a reference of precision.
- Adjustment of backlash should be carefully performed. Generally, if there is too little backlash, a high-pitched noise will occur during high-speed operation, and if the backlash is too big, a drumming sound of the tooth surfaces will occur during acceleration/deceleration. Since these noises are sensitive to the amount of backlash, the structure should be so that adjustment of backlash is possible at construction time.

Timing belt

A timing belt is used in the same cases as gear connection, but in comparison, it has advantages such as low cost and reduced noise during operation, etc. However, it is necessary to correctly understand the characteristics of timing belts and use them appropriately to maintain high precision.

Generally, the rigidity of timing belt is sufficiently higher than that of other mechanical parts such as ball screw or bearing, so there is no danger of inferiority of performance of control caused by reduction of rigidity by using timing belt. When using a timing belt with a position sensor on the motor shaft, there are cases where poor precision caused by backlash of the belt tooth and pulley tooth, or elongation of belt after a long time becomes problem, so consideration should be given to whether these errors significantly affect precision. In case the position sensor is mounted behind the timing belt (for example, on the ball screw axis), a problem of precision does not occur.

Life of the timing belt largely varies according to mounting precision and tension adjustment. Please refer to the manufacturer's Instruction Manual for correct use.

Connection between the straight shaft and a connecting element

To use a straight shaft that has no key groove, connect the shaft with a coupling using a span ring. Because the span ring connects elements by the friction generated when the screw is tightened, it is free from backlash and the concentration of stress. For this reason, the span ring is highly reliable for connecting elements.

To assure sufficient transmission with the span ring, factors such as the tightening torque of the screw, the size of the screw, the number of screws, the clamping flange, and the rigidity of connecting elements are important. Refer to the manufacturer's specifications before using the span ring. When a coupling or gear is mounted using the span ring, tighten the screws to remove a run-out of the coupling or gear including the shaft.

2.3.2 Allowable Axis Load for a Servo Motor

The allowable axis load on a motor shaft is given in the specifications of the relevant motor in Part II and afterward. Using a motor under a load higher than the allowable axial load may break the motor. When designing a machine and connecting a motor to the machine, fully consider the following points:

- The allowable radial load is determined, assuming that a radial load is applied to the end of the shaft.
- Applying a load higher than the allowable axis load may break the bearing. Applying a radial load higher than the allowable radial load may break the shaft due to a fatigue failure.
- A radial load indicates the constant force continuously applied to the shaft depending on the mounting method (such as belt tension) and the force by the load torque (such as moment/pulley radius).
- When a timing belt is used, the belt tension is critical particularly. Too tight a belt causes a fault such as the broken shaft. Belt tension must be controlled so as not to exceed the limits calculated from the allowable radial load. Positioning the pulley as close to the bearing as possible in design can prevent possible faults such as the broken shaft.
- In some use conditions, the pulley diameter and gear size should be considered. For example, when the model β8*is* is used with a pulley or gear having a radius of 2 cm or less, the radial load at the occurrence of a torque of 15 N·m (153 kgf·cm) will exceed 686 N·m (70 kgf). In this case, take measures such as supporting the end of the motor shaft mechanically.
- If a motor may be used under a load higher than the allowable axis load, the machine tool builder should examine the life by referencing the shaft diameter, bearing, and other factors. Since the standard single-row deep-groove ball bearing is used for the motor bearing, a too high axial load cannot be used. To use a worm or helical gear, in particular, use another bearing.
- The motor bearing is generally fixed with a C-snap ring, and there is a small play in the axial direction. If the axial play affects the positioning in the case of using a worm or helical gear, fit it with another bearing.

2.3.3 Axis Run-out Precision of a Servo Motor

The axis run-out precision of a servo motor is given in the specifications of the motor in Part II and afterward. The methods of measuring the axis run-out precision are specified below:

Item	Measuring method
Shaft diameter run-out	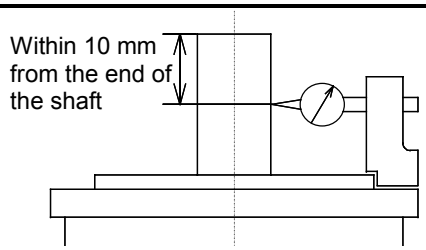
Run-out of the faucet joint for mounting the flange against the core of the shaft (Only for flange type)	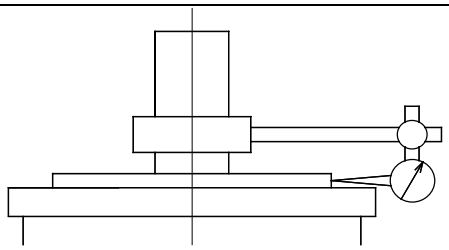
Run-out of the flange mounting surface against the core of the shaft (Only for flange type)	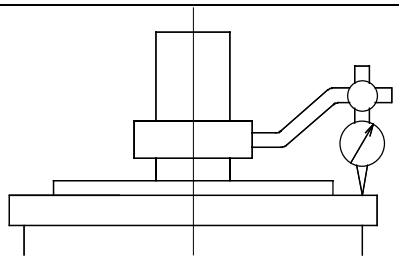

2.3.4 Machine Movement per 1 Revolution of Motor Shaft

The machine movement per 1 revolution of motor shaft must be determined at the first stage of machine design referring the load torque, load inertia, rapid traverse speed, and relation between minimum increment and resolution of the position sensor mounted on the motor shaft. To determine this amount, the following conditions should be taken into consideration.

- The machine movement per 1 revolution of motor shaft must be such that the desired rapid traverse speed can be obtained. For example, if the maximum motor speed is 1500 min^{-1} and the rapid traverse speed must be 12 m/min., the amount of "L" must be 8 mm/rev. or higher.

- As the machine movement per 1 revolution of motor shaft is reduced, both the load torque and the load inertia reflected to motor shaft also decrease.
  Therefore, to obtain large thrust, the amount of "L" should be the lowest value at which the desired rapid traverse speed can be obtained.

- Assuming that the accuracy of the reduction gear is ideal, it is advantageous to make the machine movement per 1 rev. of motor shaft as low as possible to obtain the highest accuracy in mechanical servo operations. In addition, minimizing the machine movement per 1 rev. of motor shaft can increase the servo rigidity as seen from the machine's side, which can contribute to system accuracy and minimize the influence of external load changes.

- When the machine is operation is characterized by repeated acceleration/deceleration cycles, a heating problem may occur due to the current flow caused by the acceleration and deceleration. Should this occur, the machine travel distance per motor shaft revolution should be modified. Given optimum conditions, the machine travel distance per motor shaft revolution is set such that the motor's rotor inertia equals the load inertia based on motor shaft conversion. For machines such as punch presses and PCB drilling machines, the machine's travel distance per motor shaft revolution should be set so as to satisfy this optimum condition as far as possible, while also considering the rapid traverse rate and increment system.

2.3.5 Precautions for Using Linear Axis Feedback

In the case where the machine moves in a linear direction and movement is directly detected by linear scale such as inductosyn, magne-scale etc., special considerations are necessary in comparison with the method where feedback is produced by detecting the motor shaft rotation. This is because the machine movement now directly influences the characteristics of the control system.

Machine system natural frequency

The following block diagram shows feedback produced using a linear scale.

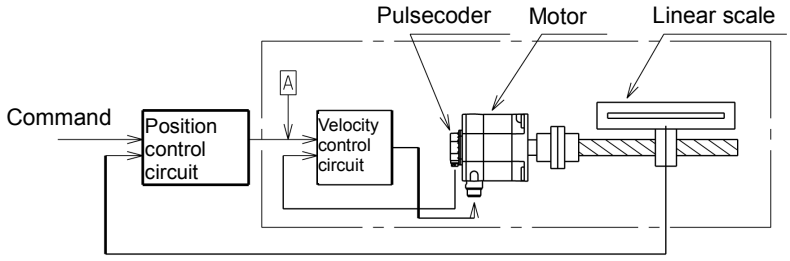

The response of this control system is determined by the adjustment value (position loop gain) of the position control circuit. In other words, the position loop gain is determined by the specified response time of the control system. In the diagram above, the section enclosed by the broken line is called the velocity loop.

Unless the response time of this section where position signal is detected is sufficiently shorter than the response time determined by the position loop gain, the system does not operate properly. In other words, when a command signal is put into point A, response time of the machine where position signals are detected must be sufficiently shorter than the response time defined by the position loop gain.

If the response of the sensor section is slow, the position loop gain should be reduced to have the system operate normally, and as a result, the response of the whole system becomes slow. The same problem is caused when inertia is great.

The main causes for slow response are the mass of the machine and the elastic deformation of the machine system. The larger the volume, and the greater the elastic deformation, the slower the response becomes.

As an index for estimating the response of this machine system, the natural frequency of the machine is used, and this is briefly calculated by the following equation.

$$W_m = \frac{1}{2\pi} \times \sqrt{\frac{K_m}{J_L}}$$

W_m : Natural frequency
J_L : Load inertia reflected to motor shaft
K_m : Rigidity of machine system
(=Torque necessary to elastically deform 1[rad] at the motor shaft when the machine table is clamped.)

The above values can be obtained by calculating the elastic deformation for each section of the driving system. The machine should be designed so that the value of this natural frequency [Hz] will be more than or equal to the value of the position loop gain [sec^{-1}]. For example, when setting 20 [sec^{-1}] as the value of position loop gain, natural frequency of machine system must be more than 20 [Hz]. In this case, the response of the control system becomes a problem for extremely small amounts of movement. Consequently, the natural frequency should be calculated from the rigidity at extremely small displacement such as 10 [μm] or less.

Stick slip

If machine movement causes a stick slip, the control system does not operate normally. That is, it does not stop where it is supposed to, but a phenomenon occurs where it goes beyond and then back within an extremely small range (hunting).
To avoid stick slip, the machine rigidity should be increased, or friction characteristics of the sliding surface should be improved. When the sliding surface friction characteristic is as in the figure below, stick slip occurs easily.

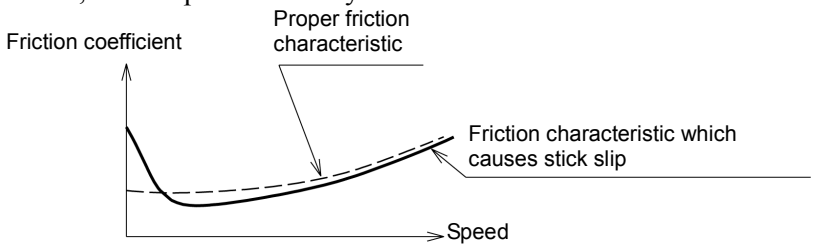

Value of machine overrun (Damping coefficient of machine system)

When the machine is floated by static pressure, etc., there are cases where the machine keeps on moving within the range of backlash although the motor shaft has stopped. If this amount is large, hunting will also occur. To avoid this, backlash should be reduced (especially the backlash of the last mass where position sensor is mounted) and the appropriate damping should be considered.

2.3.6 Cautions in Mounting a Servo Motor

The servo motor contains precision sensor, and is carefully machined and assembled to provide the required precision. Pay attention to the following items to maintain the precision and prevent damage to the sensor.

- Secure the servo motor uniformly using four bolt holes provided on the front flange.

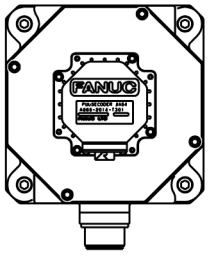

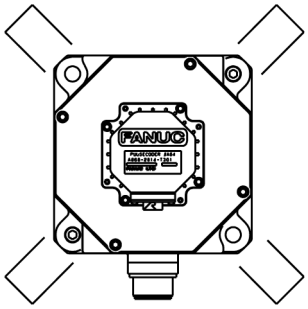

- Ensure that the surface on which the machine is mounted is sufficiently flat.
  When mounting on the machine, take care not to apply a shock to the motor.

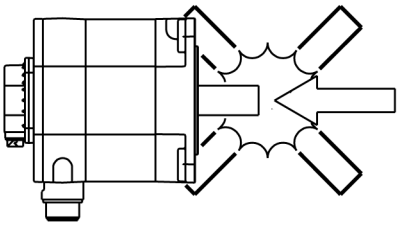

- When it is unavoidable to tap the motor for adjusting the position, etc., use a plastic hammer and tap only the front flange if possible.

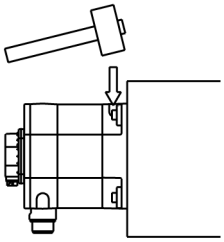

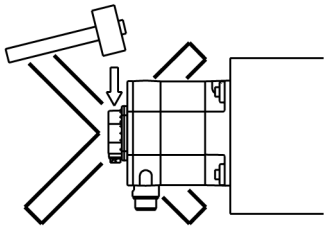

A precision sensor is directly connected to the servo motor shaft.
Pay attention to the following items to prevent damage to the sensor.

- When connecting the power transmission elements such as a gear, a pulley and a coupling to the shaft, take care not to apply a shock to the shaft.

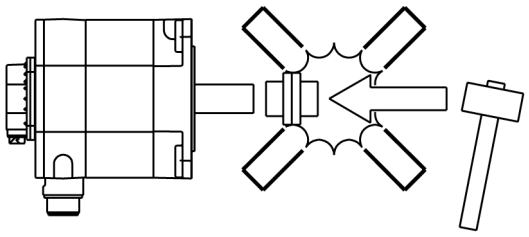

- Generally, in the case of straight shaft, use a span ring for connection with the shaft.

- In the case of tapered shaft, match the tapered surface with the power transmission element and fix by tightening the screw at the end. When the woodruff key is too tight, don't tap it with a hammer. Use the woodruff key mainly for positioning, and use the tapered surface for torque transmission. Machine the tapered surface of the power transmission element so that over 70% of the whole surface is contacted.

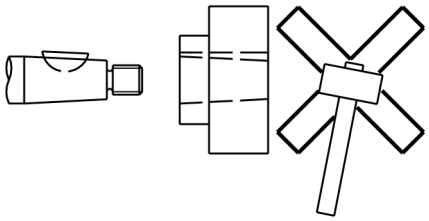

- To remove the connected power transmission element, be sure to use a jig such as a gear puller.

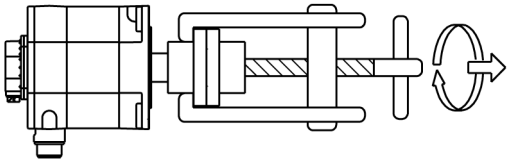

- When tapping slightly to remove the tightly contacted tapered surface, tap in the radial direction to prevent a shock in the axial direction.

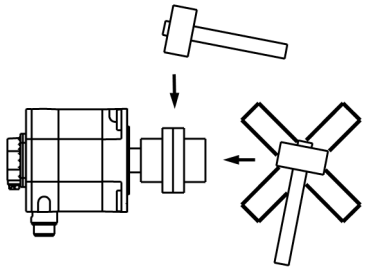

- Suppress the rotary unbalance of the connected power transmission element to the level as low as possible. It is usually believed that there is no problem in the symmetrical form. Be careful when rotating continuously the asymmetrical different form power transmission element. Even if the vibration caused by the unbalance is as small as 0.5G, it may damage the motor bearing or the sensor.

- An exclusive large oil seal is used in the front flange of the models β8*i*s to β22*i*s.
  The oil seal surface is made of steel plate. Take care not to apply a force to the oil seal when installing the motor or connecting the power transmission elements.

3 SELECTING A MOTOR

A servo motor should be selected based on the load on the servo motor, rapid traverse rate, increment system, and other conditions. Motors are subjected to the following types of torque: constant load torque (including gravity and friction), acceleration torque required for acceleration/deceleration, and, for a machine tool, cutting torque by cutting force.
When selecting a motor, calculate these loads accurately according to the instructions in this chapter and check that the calculated values satisfy the conditions for selecting a serve motor described in this chapter.
This chapter describes how to calculate the load and other conditions using a table with a horizontal axis as an example.

3.1 CONDITIONS FOR SELECTING A SERVO MOTOR

The conditions for selecting a servo motor are given below.

[Selection condition 1] Constant load torque

- **The constant load torque including mechanical friction and gravity must fall within approximately 70% of the stall torque of a motor.**
  If the constant load torque is close to the stall torque, the root-mean-square value of the total torque including the acceleration torque is more likely to exceed the stall torque.
  Along the vertical axis, the load may be increased during lifting and at stop due to a mechanical factor. In this case, the theoretically calculated gravity retaining torque must be 60% (less than 60% in some cases) of the stall torque of a motor.
  This figure of "within 70% of the continuous torque rating" is for reference only. Determine the appropriate torque based upon actual machine tool conditions.

[Selection condition 2] Motor speed

- **The motor speed must not exceed the maximum motor speed (rated speed during continuous operation).**
  Calculate the motor speed and check that the speed does not exceed the maximum motor speed. For continuous operation, check that the speed does not exceed the rated speed.

[Selection condition 3] Load inertia ratio

- **The load inertia ratio must be appropriate.**
  The ratio of motor inertia and load inertia (load inertia ratio) greatly affects the controllability of the motor as well as the acceleration/deceleration time in rapid traverse.
  When the load inertia does not exceed three times the motor inertia, an ordinary metal cutting machine can be used without problems, while the controllability may have to be lowered a little in some cases.
  For a machine for cutting a curve at a high speed, such as a router for woodworking, it is recommended that the load inertia be smaller than or equal to the motor inertia.
  If the load inertia is greater than the motor inertia by a factor of more than 3 to 5, the controllability of the motor may be adversely affected. If the load inertia is much larger than three times the motor inertia, adjustment within the normal range may be insufficient. It is desirable to avoid using a motor with such inertia.

[Selection condition 4] Acceleration torque

- **Acceleration can be made with a desired time constant.**
  Since the load torque generally helps deceleration, if acceleration can be executed with a desired time constant, deceleration can be made with the same time constant, through both acceleration and deceleration should be considered in principle. Calculate the acceleration torque and check that the torque required for acceleration is within the intermittent operating zone of the motor.

[Selection condition 5] Root-mean-square value of torque

- **The root-mean-square value of torque in a cycle must be sufficiently greater than the stall torque.**
  A motor gets hot in proportion to the square of the torque. For a servo motor for which the load condition always changes, the calculated root-mean-square value of torque in a cycle must be sufficiently greater than the stall torque.
  Pay attention, in particular, when the cutting load, acceleration/deceleration condition, and other load conditions variously change in a cycle.
  When the desired frequency of positioning in rapid traverse becomes greater, the ratio of the time during which the acceleration/deceleration torque is being applied to the entire operation time increases and the root-mean-square value of torque increases. In this case, increasing the acceleration/deceleration time constant is effective to decrease the root-mean-square value of torque.

[Selection condition 6] Percentage duty cycle and ON time with the maximum cutting torque

- **The time during which the table can be moved with the maximum cutting torque (percentage duty cycle and ON time) must be within a desired range.**
  The continuously applied torque such as the cutting load may exceed the stall torque. In this case, use overload duty curves to check how the ratio (percentage duty cycle) of the load applying time to the no-load applying time and the time during which the load is being applied (ON time) change.

[Selection condition 7] Dynamic brake stop distance

- **The stop distance when the dynamic brake is applied at an emergency stop must be within a desired range.**
  If the stop distance is not within the desired range, the machine may cause a collision at an emergency stop.

The following sections explain the procedure for selecting a motor sequentially for each selection condition. Determine whether each selection condition above is satisfied.

NOTE

When handling units, be extremely careful not to use different systems of units. For example, the weight of an object should be expressed in [kg] in the SI system of units because it is handled as "mass" or [kgf] in the gravitational system of units because it is handled as "force." Inertia is expressed in [kg·m^2] in the SI system of units or in [kgf·cm·sec^2] in the gravitational system of units.
In this manual, both systems of units are written together to support them.

$$(1kg \cdot m^2 = \frac{100}{9.8} kgf \cdot cm \cdot s^2)$$

3.2 SELECTING A MOTOR

Sample model for calculations for selecting a servo motor

The following subsections explain how to calculate conditions for selecting a servo motor best suited for a table with a horizontal axis with the following specifications.

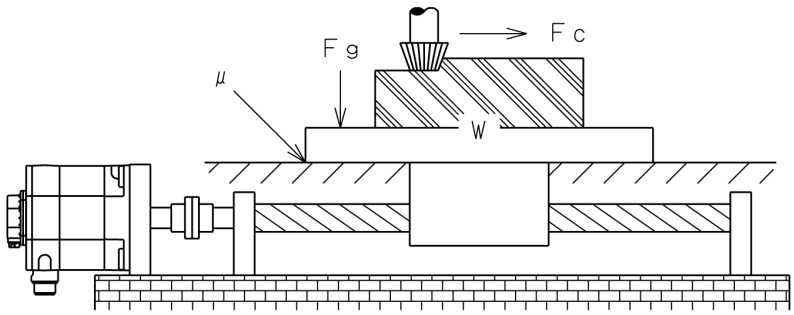

Sample mechanical specifications of the table and workpiece

W : Weight of movable parts (table and workpiece) =2940[N]=300[kgf]
w : Mass of movable parts (table and workpiece) =300[kg]
μ : Friction coefficient of the sliding surface =0.05
η : Efficiency of the driving system (including a ball screw) =0.9
F_g : Gib fastening force (kgf) =490[N]=50[kgf]
F_c : Thrust counter force caused by the cutting force (kgf) =980[N]=100[kgf]
F_{cf}: Force by which the table is pressed against the sliding surface, caused by the moment of cutting force =294[N]=30[kgf]
Z_1/Z_2 : Gear reduction ratio = 1/1
T_f : Friction torque applied to the motor shaft =0.8[N·m]=8[kgf·cm]

Sample specifications of the feed screw (ball screw)

D_b : Shaft diameter $=25\times10^{-3}$[m]=25[mm]
L_b : Shaft length =1[m]=1000[mm]
P : Pitch $=20\times10^{-3}$[m/rev]=20[mm/rev]

Sample specifications of the operation of the motor shaft

T_a : Acceleration torque [N·m][kgf·cm]
V : Workpiece rapid traverse rate =60[m/min]
V_m : Motor speed in rapid traverse [min^{-1}]
t_a : Acceleration time (s) =0.10[s]
J_M : Motor inertia [$kg·m^2$][$kgf·cm·sec^2$]
J_L : Load inertia [$kg·m^2$][$kgf·cm·sec^2$]
k_s : Position loop gain =30[s^{-1}]

3.2.1 Calculating the Load Torque

When a part moves along an axis at a constant speed, the torque obtained by multiplying the weight of the workpiece driving section by the friction coefficient is always applied. On a vertical or slanted axis, the motor keeps producing torque because it works against gravity. In addition, the motor also produces torque when the machine on the horizontal axis stops in proportion to the load friction. This continuously applied load torque is the constant load torque.
In cutting feed, the load torque is applied by cutting thrust. This is the cutting torque.
The above types of torque are generically called the load torque. The load torque applied to the motor shaft is generally given by the following equation:

$$T_m = \frac{F \times l}{2\pi\eta} + T_f$$

T_m : Load torque applied to the motor shaft [N·m]
F : Force required to move a movable part (table or tool post) along the axis [N]
l : Traveling distance of the machine tool per revolution of the motor = $P \times (Z_1/Z_2)$ [m/rev]
η : Efficiency of the driving system (including a ball screw)
T_f : Friction torque of the nut of the ball screw or bearing applied to the motor shaft (input if necessary) [N·m]

The force (F) is mainly given by the following equations:

When cutting is not executed (vertical axis):

$F=(w-w_c)g=W-W_c$

w_c : Mass of the counterbalance [kg]
Wc : Weight of the counterbalance [kgf]

When cutting is not executed (horizontal axis):

$F=\mu(W+F_g)$

When cutting is in progress (horizontal axis) (constant load + cutting thrust):

$F=F_c+\mu(W+F_g+F_{cf})$

[Example of calculation for condition 1] Constant load torque

For a table with a horizontal axis as given as a model, the constant load torque when cutting is not executed is calculated as follows:

Example $F=0.05\times (2940+490)=171.5[N]=17.5[kgf]$
$T_m=(171.5\times20\times10^{-3}\times1)\div(2\times\pi\times0.9)+0.8$
$=1.4[N\cdot m]=14.3[kgf\cdot cm]$

Cautions in calculating the load torque

When calculating the torque, take the following precautions:

- Allow for the friction torque caused by the gib fastening force (F_g).
  The torque calculated only from the weight of a movable part and the friction coefficient is generally quite small. The gib fastening force and precision of the sliding surface may have a great effect on the torque.

- The pre-load of the bearing or nut of the ball screw, pre-tension of the screw, and other factors may make T_c of the rolling contact considerable.
  In a small, lightweight machine tool, the friction torque will greatly affect the entire torque.

- Allow for an increase in friction on the sliding surface (F_{cf}) caused by the cutting resistance. The cutting resistance and the driving force generally do not act through a common point as illustrated below. When a large cutting resistance is applied, the moment increases the load on the sliding surface.
  When calculating the torque during cutting, allow for the friction torque caused by the load.

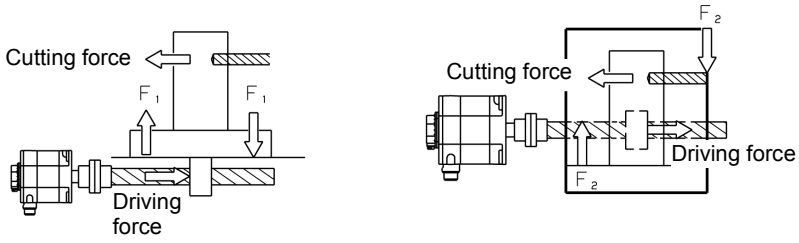

- The feedrate may cause the friction torque to vary greatly. Obtain an accurate value by closely examining variations in friction depending on variations in speed, the mechanism for supporting the table (sliding contact, rolling contact, static pressure, etc.), material of the sliding surface, lubricating system, and other factors.

- The friction torque of a single machine varies widely due to adjustment conditions, ambient temperature, and lubrication conditions. Collect a great amount of measurement data of identical models so that a correct load torque can be calculated. When adjusting the gib fastening force and backlash, monitor the friction torque. Avoid generating an unnecessarily great torque.

3.2.2 Calculating the Motor Speed

Calculate the motor speed using the movable part rapid traverse rate and traveling distance per revolution of the motor and check that the calculated motor speed does not exceed the maximum motor speed (rated speed for continuous operation).

$$V_m = \frac{V}{l}$$

V_m : Motor speed in rapid traverse [min^{-1}]
V : Workpiece rapid traverse rate [m/min]
l : Traveling distance per revolution of the motor [m]

[Example of calculation for condition 2] Motor speed

When V is 60 [m/min] and l is $P \times Z_1/Z_2 = 0.020 \times 1/1 = 0.020$ [m], V_m is $60/0.020 = 3000$ min^{-1}.
Then, select a motor whose load torque when cutting is not executed (stall torque) is 1.4 [N·m] and whose maximum speed is at least 3000 [min^{-1}] from the data sheet. The β8/3000*i*s (with a stall torque of 7.0 [N·m]) is provisionally selected with considering the acceleration/deceleration condition described in the following subsection.

3.2.3 Calculating the load inertia

Unlike the load torque, an accurate load inertia can be obtained just by calculation.
The inertia of all objects moved by the revolution of a driving motor forms the load inertia of the motor. It does not matter whether the object is rotated or moved along a straight line. Calculate the inertia values of individual moving objects separately, then add the values together, according to a rule, to obtain the load inertia. The inertia of almost all objects can be calculated according to the following basic rules:

Inertia of a cylindrical object (ball screw, gear, coupling, etc.)

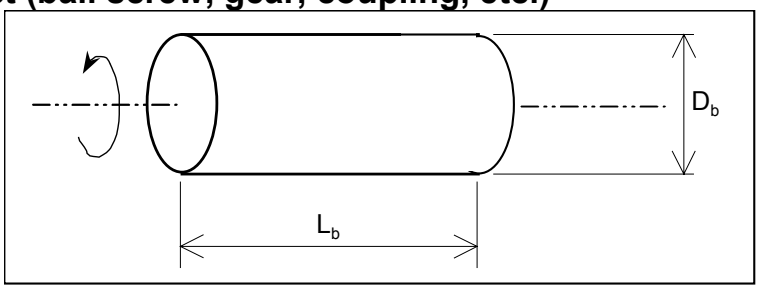

The inertia of a cylindrical object rotating about its central axis is calculated as follows:

SI unit

$$Jb = \frac{\pi \gamma_b}{32} D_b^4 L_b \qquad [kg \cdot m^2]$$

J_b : Inertia [kg·m^2]
γ_b : Weight of the object per unit volume [kg/m^3]
D_b : Diameter of the object [m]
L_b : Length of the object [m]

Gravitational system of units

$$Jb = \frac{\pi \gamma_b}{32 \times 980} D_b^4 L_b \qquad [kgf \cdot cm \cdot s^2]$$

J_b : Inertia [kgf·cm·s^2]
γ_b : Weight of the object per unit volume [kg/cm^3]
D_b : Diameter of the object [cm]
L_b : Length of the object [cm]

Example)
When the shaft of a ball screw is made of steel (γ=7.8×10^3[kg/m^3]), inertia Jb of the shaft is calculated as follows:
When D_b=0.030[m], L_b=1[m],
J_b=7.8×10^3×π÷32×0.030^4×1=0.00030[kg·m^2] =0.0031[kgf·cm·s^2]
($1kg \cdot m^2 = \frac{100}{9.8} kgf \cdot cm \cdot s^2$)

Inertia of a heavy object moving along a straight line (table, workpiece, etc.)

SI unit

$$J_w = W \times \left(\frac{l}{2\pi} \right)^2 \qquad [kg \cdot m^2]$$

W : Weight of the object moving along a straight line [kg]
l : Traveling distance along a straight line per revolution of the motor [m]

Gravitational system of units

$$J_w = \frac{W}{980} \times \left(\frac{l}{2\pi} \right)^2 \qquad [kgf \cdot cm \cdot s^2]$$

W : Weight of the object moving along a straight line [kgf]
l : Traveling distance along a straight line per revolution of the motor [cm]

Example)
When W is 300 [kg] and l is 20 [mm], J_w of a table and workpiece is calculated as follows:
$J_w=300\times(0.020\div2\div\pi)^2=0.00304$ [kg·m^2] = 0.0310 [kgf·cm·s^2]

Inertia of an object whose speed is increased above or decreased below the speed of the motor shaft

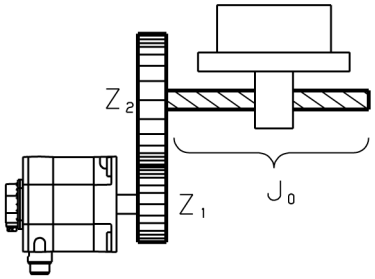

The inertia applied to the motor shaft by inertia J_0 is calculated as follows:

$$J = \left(\frac{Z_1}{Z_2} \right)^2 \times J_0 \quad or \quad \left(\frac{1}{Z} \right)^2 \times J_0$$

J_0 : Inertia before the speed is changed
Z_1,Z_2 : Number of teeth when the gear connection
1/Z : Deceleration ratio

Inertia of a cylindrical object in which the center of rotation is displaced

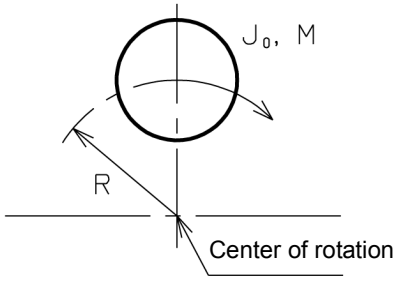

$$J = J_0 + MR^2$$

J_0 : Inertia around the center of the object
M : Weight of the object
R : Radius of rotation

The above equation is used to calculate the inertia of, for example, a large gear which is hollowed out in order to reduce the inertia and weight.
The sum of the inertia values calculated above is J (load inertia) for accelerating the motor.

Cautions as to the limitations on load inertia

The load inertia has a great effect on the controllability of the motor as well as the time for acceleration/deceleration in rapid traverse. When the load inertia is increased, the following two problems may occur: When a command is changed, it takes more time for the motor to reach the speed specified by the new command. When a machine tool is moved along two axes at a high speed to cut an arc or curve, a larger error occurs.
When the load inertia is smaller than or equal to the rotor inertia of the motor, those problems will not occur. When the load inertia is up to three times the rotor inertia, the controllability may have to be lowered a little. Actually, this will not adversely affect the operation of an ordinary metal cutting machine. If a router for woodworking or a machine to cut a curve at a high speed is used, it is recommended that the load inertia be smaller than or equal to the rotor inertia.
When the load inertia is greater than the rotor inertia by a factor of more than 3 to 5, the controllability of the motor will be adversely affected.
If the load inertia much larger than three times the rotor inertia, an adjustment in the normal range may be insufficient. Avoid using a machine with such a great load inertia.

[Example of calculation for condition 3] Load inertial ratio

In this example, the sum of J_b and J_w obtained above is the load inertia (J_L).

$J_L = 0.00030 + 0.00304 = 0.00334$ [kg·m^2]

The motor inertial of the β8/3000*is* is 0.00117 [kg·m^2] and the load inertia ratio is 2.85 times the motor inertia. This value is within the allowable range.

3.2.4 Calculating the Acceleration Torque

Calculate the acceleration torque required for the motor to accelerate and then obtain the torque required for acceleration by calculating the total torque including the constant load torque calculated before. Next, confirm the result is included in the intermittent operation area for the motor.

3.2.4.1 Calculating acceleration torque

Assuming that the motor shaft operates ideally in the acceleration/ deceleration mode determined by the NC, calculate the acceleration. Multiply the acceleration by the entire inertia (motor inertia + load inertia). The product is the acceleration torque.
In rapid traverse, there are linear acceleration/deceleration and feed-forward during rapid traverse + bell-shaped acceleration/deceleration. The equations for calculating the acceleration torque in each mode are given below.

Acceleration torque in linear acceleration/deceleration

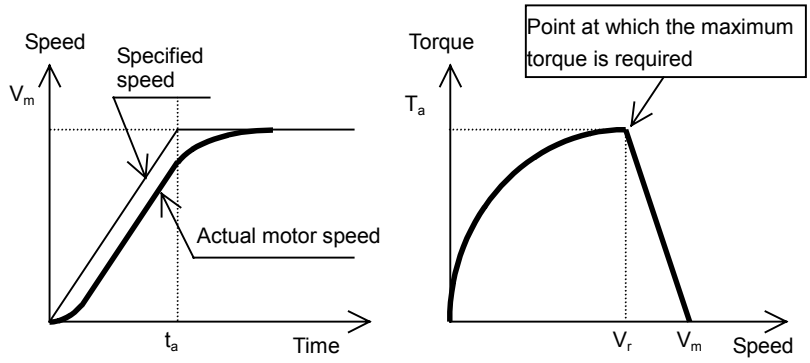

When the torque is T_a and the speed is V_r in the above figure, the maximum torque is required. The equations for calculating T_a and V_r are given below:

$$T_a = V_m \times \frac{2\pi}{60} \times \frac{1}{t_a} \times (J_M + J_L / \eta) \times (1 - e^{-k_s \cdot t_a})$$

$$V_r = V_m \times \{1 - \frac{1}{t_a \cdot k_s}(1 - e^{-k_s \cdot t_a})\}$$

T_a : Acceleration torque [N·m]
V_m : Motor speed in rapid traverse [min^{-1}]
t_a : Acceleration time [sec]
J_M : Motor inertia [$kg \cdot m^2$]
J_L : Load inertia [$kg \cdot m^2$]
V_r : Motor speed at which the acceleration torque starts to decrease [min^{-1}]
k_s : Position loop gain [sec^{-1}]
η : Machine tool efficiency
e : base of a natural logarithm (≒ 2.71)

[Example of calculation for condition 4-1] Example of calculation

Try to perform linear acceleration/deceleration under the following condition.

V_m=3000 [min^{-1}]
t_a=0.1 [s]
k_s=30 [s^{-1}]
J_L=0.00334 [$kg \cdot m^2$]

Select the β8/3000*i*s provisionally selected in example of calculation <1>.

J_M motor inertia is 0.00117 [$kg \cdot m^2$] when β8/3000*i*s is selected, so the load inertia is calculated as follows:

$T_a = 3000 \times (2\pi/60) \times (1/0.1) \times (0.00117+0.00334 \div 0.9) \times (1-e^{-30 \times 0.1})$
$= 14.6$ [N·m] = 149 [kgf·cm]

$V_r = 3000 \times \{1-1/(0.1 \times 30) \times (1-e^{-30 \times 0.1})\} = 2050$ [min^{-1}]

Acceleration torque in feed-forward during rapid traverse + bell-shaped acceleration/deceleration

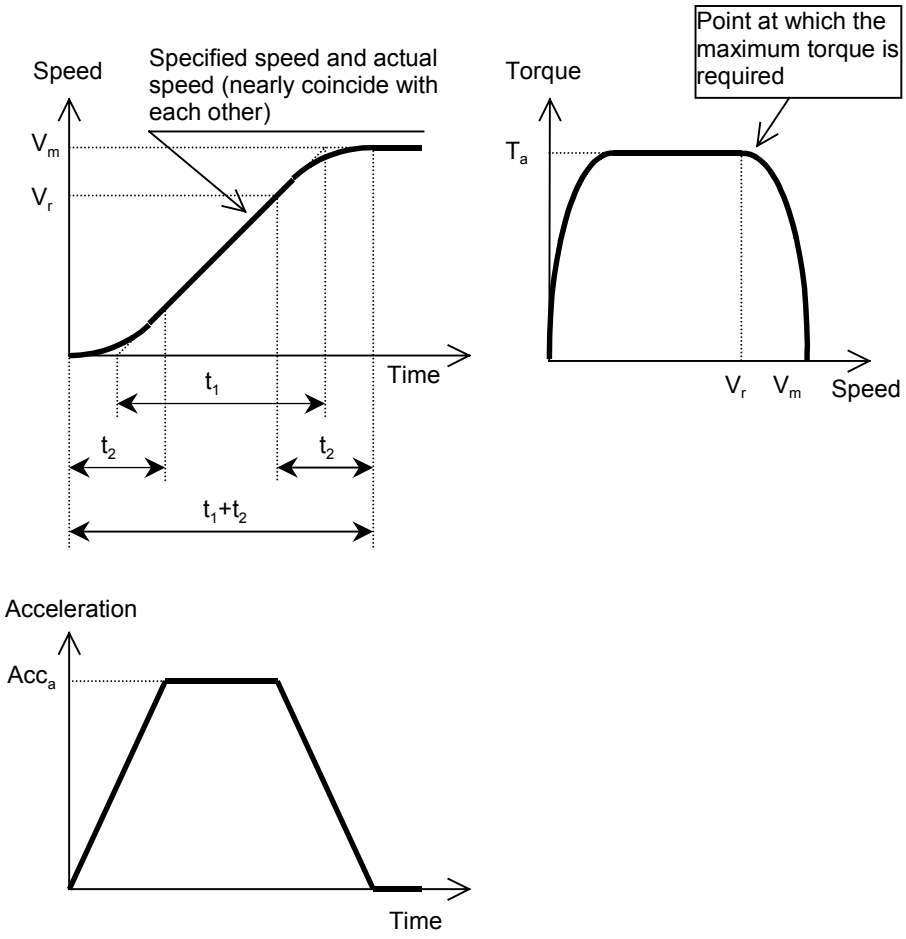

When the feed-forward coefficient is large enough, the acceleration torque in feed-forward during rapid traverse + bell-shaped acceleration/deceleration can approximate to the value obtained with the feed-forward coefficient = 1. When the feed-forward coefficient is 1, the equations for calculating the acceleration torque (T_a), speed (V_r), and maximum workpiece acceleration (Acc_a) are given below:

$$T_a = V_m \times \frac{2\pi}{60} \times \frac{1}{t_1} \times (J_M + J_L/\eta\eta$$

$$V_r = V_m \times (1 - \frac{t_2}{2t_1})$$

$$Acc_a = V_m \times \frac{2\pi}{60} \times \frac{1}{t_1} \times P$$

T_a : Acceleration torque [N·m]
V_m : Motor speed in rapid traverse [min^{-1}]
t_1 : Acceleration time constant T1 [sec]
t_2 : Acceleration time constant T2 [sec]
J_M : Motor inertia [$kg \cdot m^2$]
J_L : Load inertia [$kg \cdot m^2$]
η : Machine tool efficiency
V_r : Motor speed at which the acceleration torque starts to decrease [min^{-1}]
Acc_a : Maximum workpiece acceleration [m/sec^{-2}] [G]
P : Pitch [m/rev]

(Reference)
Minimizing t_1 and increasing t_2 by the same amount allows the maximum workpiece acceleration (Acc_a) to be increased and the motor speed at which the acceleration torque starts to decrease (V_r) to be decreased. This allows the efficient use of the motor acceleration torque.
If t_2 is too large, the positioning completion time ($t_1 + t_2$) tends to increase.
Consequently, achieving a balance between t_1 and t_2 is effective in obtaining required specifications of the machine.

3.2.4.2 Calculating the torque required by the motor shaft in acceleration

To obtain the torque required by the motor shaft (T), add the constant load torque (T_m) to the acceleration torque (T_a).

$$T = T_a + T_m$$

T : Torque required by the motor axis
T_a : Acceleration torque
T_m : Constant load torque

[Example of calculation for condition 4-2] Acceleration torque

When T_m is 1.4 [N·m] as calculated in example of calculation <1> and T_a is 14.6 [N·m] as calculated in example of calculation <4>-1, the acceleration torque (T) is calculated as follows:

T = 14.6 [N·m] + 1.4 [N·m] = 16.0 [N·m]

The speed when the maximum torque is required (V_r) is 2050 [min^{-1}].

The speed-torque characteristics of the β8/3000*i*s, given below, show that the point of 16.0 [N·m]/2050 [min^{-1}] is beyond the intermittent operating zone of the β8/3000*i*s (the torque is insufficient).

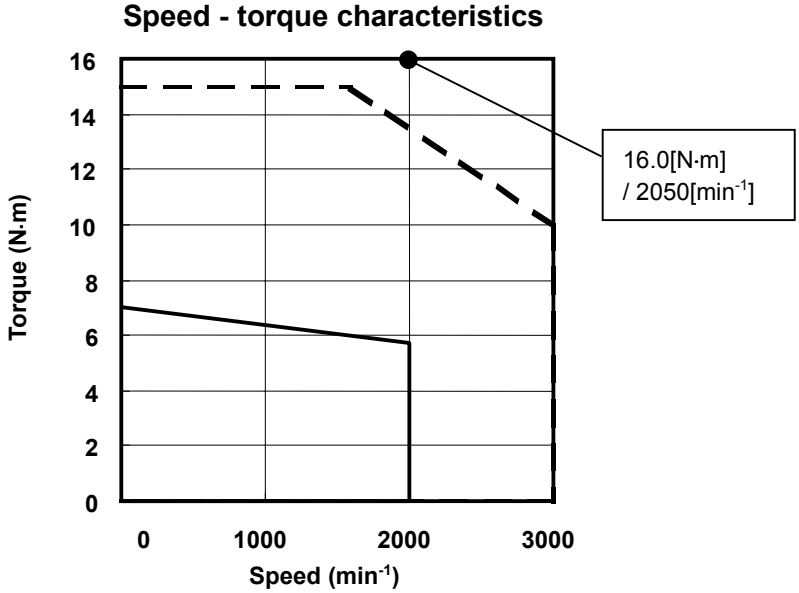

Speed - torque characteristics for β8/3000*i*s

If it is impossible to change the operation specifications of the shaft (such as to increase the acceleration time), a larger motor must be selected.

Select the β12/3000*i*s (motor inertia (J_M) = 0.00228 [kg·m^2], 1.5 times load inertia ratio) and calculate the acceleration torque again.

T_a = 17.9 [N·m] = 182.5 [kgf·cm]
V_r = 2050 [min^{-1}]
T = 17.9 [N·m] + 1.4 [N·m] = 19.3 [N·m]

The speed-torque characteristics of the β12/3000*i*s, given below, show that the point of 19.3 [N·m]/2050 [min^{-1}] is within the intermittent operating zone of the β12/3000*i*s (acceleration is possible).

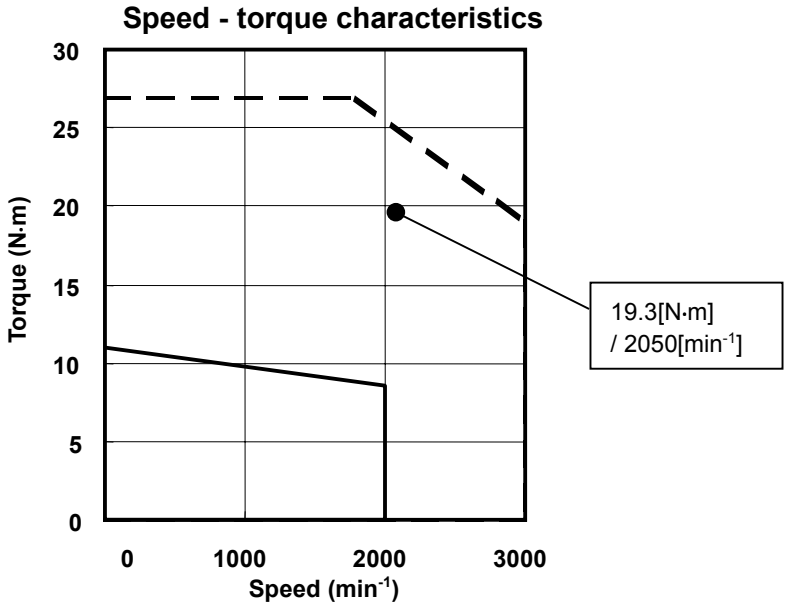

Speed - torque characteristics for β12/3000*i*s

3.2.5 Calculating the Root-mean-square Value of the Torques

A motor gets hot in proportion to the square of the torque. For a servo motor for which the load condition always changes, the calculated root-mean-square value of torque in a cycle must be sufficiently greater than the stall torque.

Root-mean-square value of torque in acceleration/deceleration in rapid traverse

First, generate an operation cycle which performs acceleration/ deceleration in rapid traverse with a desired frequency of positioning in rapid traverse. Write the time-speed graph and time-torque graph as shown below.

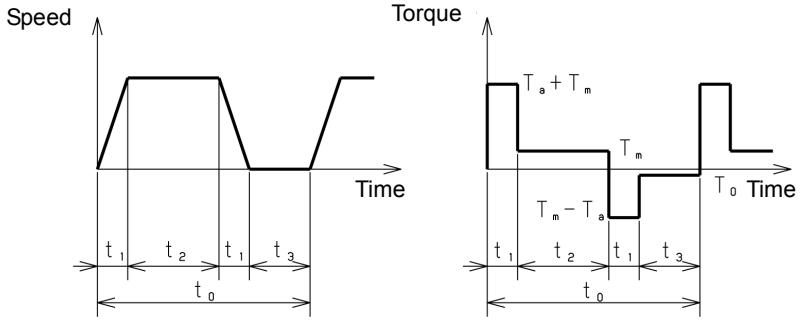

From the time-torque graph, obtain the root-mean-square value of torques applied to the motor during the single operation cycle. Check whether the value is smaller than or equal to the torque at stall.

$$T_{rms} = \sqrt{\frac{(T_a + T_m)^2 t_1 + T_m{}^2 t_2 + (T_a - T_m)^2 t_1 + T_0{}^2 t_3}{t_0}}$$

T_a : Acceleration torque [N·m] [kgf·cm]
T_m : Friction torque [N·m] [kgf·cm]
T_o : Torque when stopped [N·m] [kgf·cm]

When T_{rms} falls within 90% of the stall torque T_s, the servo motor can be used. (The entire thermal efficiency and other margins must be considered.)

NOTE
The motor actually rotates, but the determination must be based on the stall torque.
When the motor is being operated at high speed for a comparatively large proportion of the time, you must take the rotating speed of the motor into consideration and evaluate whether output can be specified in terms of a continuous operation torque.

[Example of calculation for condition 5]
Root-mean-square value of the torques

β12/3000*i*s (T_s = 1.4 [N·m]), T_a = 17.9 [N·m],
$T_m = T_o$ = 1.4 [N·m], t_1 = 0.1 [sec], t_2 = 2.0 [sec], t_3 = 3.0 [sec]

$$T_{rms} = \sqrt{\frac{(17.9+1.4)^2 \times 0.1 + 1.4^2 \times 2.0 + (17.9-1.4)^2 \times 0.1 + 1.4^2 \times 3.0}{0.1 \times 2 + 2.0 + 3.0}}$$

= 3.8 [N·m] = 38.8 [kgf·cm] < $T_s \times 0.9 = 11 \times 0.9 = 9.9$ [N·m]
= 101.0 [kgf·cm]

The β12/3000*i*s can be used for operation.

Root-mean-square value of torque in a cycle in which the load varies

If the load conditions (cutting load, acceleration/deceleration conditions, etc.) vary widely in a single cycle, write a time-torque graph according to the operation cycle, as in above item. Obtain the root-mean-square value of the torques and check that the value is smaller than or equal to the torque at stall.

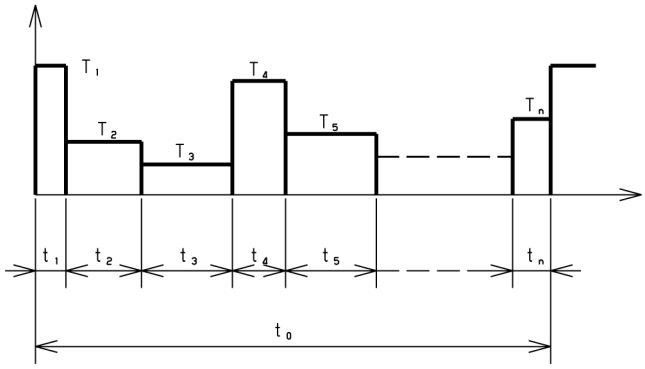

$$T_{rms} = \sqrt{\frac{T_1^2 t_1 + T_2^2 t_2 + T_3^2 t_3 + \ldots + T_n^2 t_n}{t_0}}$$

$t_0 = t_1 + t_2 + t_3 + \ldots + t_n$

NOTE
The motor actually rotates, but the determination must be based on the stall torque.
When the motor is being operated at high speed for a comparatively large proportion of the time, you must take the rotating speed of the motor into consideration and evaluate whether output can be specified in terms of a continuous operation torque.

3.2.6 Calculating the Percentage Duty Cycle and ON Time with the Maximum Cutting Torque

Confirm that the time (duty percentage and ON time) during which the maximum cutting torque can be applied for cutting is shorter than the desired cutting time.
First, calculate the load torque applied when the cutting thrust (F_c) is applied to the motor shaft (T_{ms}). When this load torque is smaller than the product of the motor stall torque (T_s) and thermal efficiency (α), the motor can be used in continuous cutting. If the value is greater than the product, follow the procedure below to calculate the ON time during which the maximum cutting load torque (T_{ms}) can be applied to the motor (t_{ON}) and the percentage ratio (percentage duty cycle with the maximum cutting torque) of the ON time to the total time of a single cutting cycle (t).
α is assumed to be 0.9. Calculate the percentage considering the specifications of the machine.

Determining whether continuous operation can be performed with the maximum cutting torque

Calculate the percentage duty cycle, according to the following figure and expressions.

$T_{ms}<T_s\times\alpha$

Operation can be continued with the maximum cutting torque. (The percentage duty cycle with the maximum cutting torque is 100%.)

$T_{ms}>T_s\times\alpha$

Calculate the percentage duty cycle, according to the following figure and expressions.

[Example of calculation for condition 6-1] Percentage duty cycle and ON time with the maximum cutting torque

The load torque in cutting is calculated as follows:

$F=F_c+\mu(W+F_g+F_{cf})$

$F=980+0.05\times(2940+490+294)=1166[N]=119[kgf]$

$T_m=(1166\times20\times10^{-3}\times1)\div(2\times\pi\times0.9)+0.8=4.9[N\cdot m]=50[kgf\cdot cm]$

The stall torque of the β12/3000*i*s (T_s) is 11 [N·m].

$T_s\times\alpha= 11\times0.9 = 9.9[N\cdot m]=101.0[kgf\cdot cm]>T_{ms} = 4.9[N\cdot m]$
$=50[kgf\cdot cm]$

No problems will occur in continuous cutting.

Calculating the percentage duty cycle with the maximum cutting torque

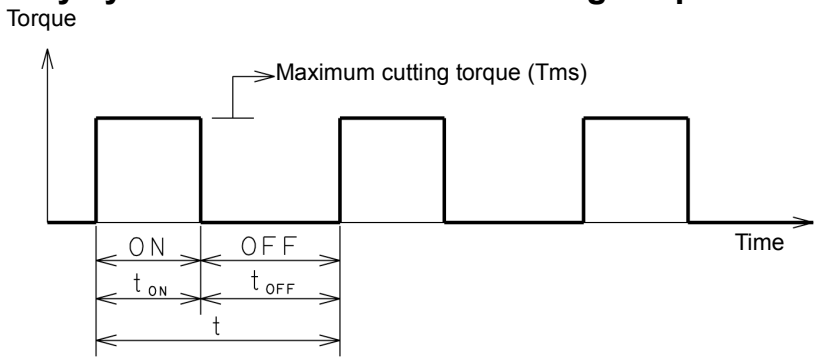

If the load torque (T_{ms}) is greater than the product of the motor stall torque (T_s) and thermal efficiency (α), calculate the root-mean-square value of torque applied in a single cutting cycle. Specify t_{ON} and t_{OFF} so that the value does not exceed the product of the motor stall torque (T_s) and thermal efficiency (α). Then, calculate the percentage duty cycle with the maximum cutting torque as shown below.

Percentage duty cycle with the maximum cutting torque (Tms)

$$= \frac{t_{on}}{t_{on} + t_{off}} \times 100[\%]$$

[Example of calculation for condition 6-2] Percentage duty cycle and ON time with the maximum cutting force

Example)

Assume that T_{ms} is 15 [N·m] (T_m is 1.4 [N·m]).

$\sqrt{\frac{15^2 t_{on} + 1.4^2 t_{off}}{t_{on} + t_{off}}} < 9.9[N \cdot m]$ (90% of the rated torque of the βi12/3000*is*)

Therefore,

$$\frac{t_{on}}{t_{off}} < 0.76$$

The above ratio of the non-cutting time to the cutting time is required. The percentage duty cycle is calculated as follows:

$$\frac{t_{on}}{t_{on} + t_{off}} \times 100 = 43.0\%$$

Limitations on ON time

The period during which continuous operation under an overload is allowed is also restricted by the OVC alarm level and overload duty cycle characteristics. Refer to Subsec.3.4.1 for details

3.2.7 Calculating the Dynamic Brake Stop Distance

The equation for calculating the coasting distance when an abnormality occurs and the machine tool is stopped by dynamic braking with both ends of the motor power line shorted (dynamic brake stop distance) is given below:

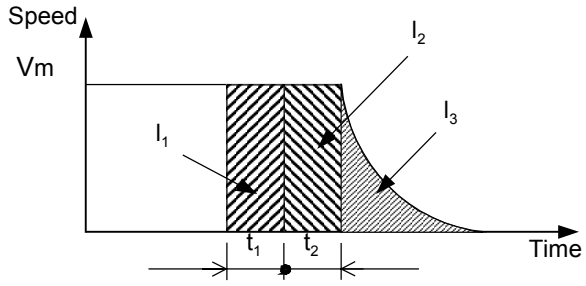

Vm : Rapid traverse rate, mm/sec or [deg /sec]
I_1 : Coasting distance due to delay time t_1 of receiver
I_2 : Coasting distance due to deceleration time t_2 of magnetic contactor (MCC)
I_3 : Coasting distance by dynamic braking after magnetic contactor has been operated (t_1+t_2) is usually about 0.05 [sec].

$$\text{Coasting distance due} = Vm \times (t_2 + t_2) + (J_M + J_L) \times (A \times No + B \times No^3) \times L \quad [mm] \; or \; [\text{deg}]$$

J_M : Motor inertia [kg·m^2] [kgf·cm·s^2]
J_L : Load inertia [kg·m^2] [kgf·cm·s^2]
N_O : Motor speed at rapid traverse [min^{-1}]
L : Machine movement on one-rotation of motor [mm] or [deg] (N_O/60×L=V_m)
A : Coefficient A for calculating the dynamic brake stop distance
B : Coefficient B for calculating the dynamic brake stop distance

For details of A and B, see the table on the following page.
For J_M, see the data sheet of each motor.

There are two ways of shortening this dynamic brake stop distance: Emergency stop distance shortening function, and emergency stop distance shortening function effective also during power interruptions (additional hardware is required).

[Example of calculation for condition 7] Dynamic brake stop distance

Assume that the desired stop distance is 150 mm.
Coasting distance =

$(3000/60\times20)[\text{mm/sec}]\times0.05[\text{sec}]+(0.00228[\text{kg}\cdot\text{m}^2]+0.00334[\text{kg}\cdot\text{m}^2])\times(4.0\times10^{-2}\times3000[\text{min}^{-1}]+3.1\times10^{-9}\times3000^3[\text{min}^{-1}])\times20[\text{mm/rev}]$
$=73\text{mm}$

It has been shown that the machine tool can be stopped within the desired stop distance.
Finally, the β12/3000*i*s which satisfies selection conditions <1> to <7> is selected.

Coefficients for dynamic brake calculation

When an αis/βis series servo amplifier (SVM) is used

Model	SI unit		Gravitational system of units	
	A	B	A	B
β0.2/5000is	8.3	5.3×10^{-7}	8.1×10^{-1}	5.7×10^{-8}
β0.3/5000is	3.4	4.6×10^{-7}	3.4×10^{-1}	4.5×10^{-8}
β0.4/5000is	2.3	4.6×10^{-7}	2.3×10^{-1}	4.5×10^{-8}
β0.5/5000is	9.0×10^{-1}	2.1×10^{-7}	8.8×10^{-2}	2.0×10^{-8}
β1/5000is	3.8×10^{-1}	8.8×10^{-8}	3.7v10^{-2}	8.7×10^{-9}
β2/4000is	2.1×10^{-1}	8.1×10^{-8}	2.1×10^{-2}	8.0×10^{-9}
β4/4000is	8.7×10^{-2}	4.1×10^{-8}	8.5×10^{-3}	4.9×10^{-9}
β8/3000is	3.9×10^{-2}	5.3×10^{-8}	3.8×10^{-3}	5.0×10^{-9}
β12/3000is	1.0×10^{-1}	4.1×10^{-9}	1.0×10^{-2}	4.4×10^{-10}
β22/2000is	4.0×10^{-2}	7.0×10^{-9}	3.9×10^{-3}	6.8×10^{-10}

The values of A and B are calculated by assuming that the resistance of the power line is 0.05Ω per phase. The values will vary slightly according to the resistance value of the power line.
The coefficient above values are applicable when the αi series servo amplifier or βi series servo amplifier is being used. The coefficient may change, depending on the type of the servo amplifier. Contact FANUC when using the other amplifier.

When an βis series servo spindle amplifier (SVPM) is used

Model	SI unit		Gravitational system of units	
	A	B	A	B
β12/3000is	1.9×10^{-2}	2.5×10^{-8}	1.9×10^{-3}	2.4×10^{-9}
β22/2000is	7.8×10^{-3}	3.5×10^{-8}	7.6×10^{-4}	3.5×10^{-9}

The values of A and B are calculated by assuming that the resistance of the power line is 0.05Ω per phase. The values will vary slightly according to the resistance value of the power line.
The coefficient above values are applicable when the βi series servo spindle amplifier is being used. The coefficient may change, depending on the type of the servo amplifier. Contact FANUC when using the other amplifier.

3.3 HOW TO FILL IN THE SERVO MOTOR SELECTION DATA TABLE

Select a suitable motor according to load conditions, rapid traverse rate, increment system and other factors. To aid in selecting the correct motor, we recommend filling in the "Servo Motor Selection Data Table" on the following page.
This section describes the items to fill in the Servo Motor Selection Data Table.

3.3.1 Servo Motor Selection Data Table

The Servo Motor Selection Data Table for the SI system of units and that for the gravitational system of units are given on the following pages.

Servo Motor Selection Data Table

SI unit

User name		Kind of machine tool	
CNC equipment		Type of machine tool	
Spindle motor			

Item		Axis				
Specifications of moving object						
* Weight of moving object (including workpiece, etc.)		kg				
* Axis movement direction (horizontal, vertical, rotation, slant)						
* Angle of the slant		deg				
* Counterbalance (forth)		N				
* Table support (sliding, rolling, static pressure)						
* Ball screw	Diameter	mm				
	Pitch	mm				
	Length	mm				
* Rack and pinion	Diameter of pinion	mm				
	Thickness of pinion	mm				
* Friction coefficient						
Machine tool efficiency						
* Total gear ratio						
Mechanical specifications						
Traveling distance of the machine tool per revolution of the motor		mm/rev				
Least input increment of NC		mm				
* Rapid traverse feedrate		mm/min				
Motor speed in rapid traverse		1/min				
* Total load inertia applied to the motor shaft (*1)		$kg \cdot m^2$				
Inertia of coupling, reduction gear and pulley		$kg \cdot m^2$				
* Steady-state load torque (*2)		N·m				
* Cutting thrust		N				
Maximum cutting torque		N·m				
Required percentage duty cycle/ON time with the maximum cutting torque		%				
Positioning distance		mm				
Required positioning time (*3)		sec				
In-position set value		mm				
Rapid traverse positioning frequency (continuous, intermittent)		times/min				
Dynamic brake stop distance		mm				
Motor specifications and characteristics						
Motor type						
Pulsecoder						
Shaft shape						
Brake (Yes/No)						
Feed-forward during rapid traverse (Yes/No)						
Acceleration/deceleration time constant in rapid traverse	T_1	m·sec				
	T_2	m·sec				
Position loop gain		1/sec				

Be sure to fill in units other than the above if used. (Sometimes "deg" is used instead of "mm" for the rotary axis.)

* Note required values for selecting the motor.

*1 If possible enter the total load inertia. If you enter the inertia of coupling, reduction gear and pulley (motor shaft conversion) in the next item, you can also calculate the total load inertia by adding the weight of the moving object and ball screw values by logical calculation in the case of a linear shaft.

*2 Steady-state load torque refers to the steady-state components such as friction (holding torque is included in the case of a gravity shaft) when the motor is rotating at a fixed speed. Enter the state-state load torque as far as possible. If details are unknown, use a value calculated logically from the weight and friction coefficient. Enter the steady-state load torque of the rotary axis in the same way as for load inertia as it cannot be calculated logically. You need not enter the torque required for acceleration/deceleration.

*3 Servo delay and setting times must also be taken into consideration in the positioning time.

(**) Comments

Servo Motor Selection Data Table

Gravitational system of units

User name		Kind of machine tool	
CNC equipment		Type of machine tool	
Spindle motor			

Item		Axis				
Specifications of moving object						
* Weight of moving object (including workpiece, etc.)		kgf				
* Axis movement direction (horizontal, vertical, rotation, slant)						
* Angle of the slant		deg				
* Counterbalance (forth)		kgf				
* Table support (sliding, rolling, static pressure)						
* Ball screw	Diameter	mm				
	Pitch	mm				
	Length	mm				
* Rack and pinion	Diameter of pinion	mm				
	Thickness of pinion	mm				
* Friction coefficient						
Machine tool efficiency						
* Total gear ratio						
Mechanical specifications						
Traveling distance of the machine tool per revolution of the motor		mm/rev				
Least input increment of NC		mm				
* Rapid traverse feedrate		mm/min				
Motor speed in rapid traverse		1/min				
* Total load inertia applied to the motor shaft (*1)		$kgf{\cdot}cm{\cdot}s^2$				
Inertia of coupling, reduction gear and pulley		$kgf{\cdot}cm{\cdot}s^2$				
* Steady-state load torque (*2)		kgf·cm				
* Cutting thrust		kgf				
Maximum cutting torque		kgf·cm				
Required percentage duty cycle/ON time with the maximum cutting torque		%				
Positioning distance		mm				
Required positioning time (*3)		sec				
In-position set value		mm				
Rapid traverse positioning frequency (continuous, intermittent)		times/min				
Dynamic brake stop distance		mm				
Motor specifications and characteristics						
Motor type						
Pulsecoder						
Shaft shape						
Brake (Yes/No)						
Feed-forward during rapid traverse (Yes/No)						
Acceleration/deceleration time constant in rapid traverse	T_1	m·sec				
	T_2	m·sec				
Position loop gain		1/sec				

Be sure to fill in units other than the above if used. (Sometimes "deg" is used instead of "mm" for the rotary axis.)

* Note required values for selecting the motor.

*1 If possible enter the total load inertia. If you enter the inertia of coupling, reduction gear and pulley (motor shaft conversion) in the next item, you can also calculate the total load inertia by adding the weight of the moving object and ball screw values by logical calculation in the case of a linear shaft.

*2 Steady-state load torque refers to the steady-state components such as friction (holding torque is included in the case of a gravity shaft) when the motor is rotating at a fixed speed. Enter the state-state load torque as far as possible. If details are unknown, use a value calculated logically from the weight and friction coefficient. Enter the steady-state load torque of the rotary axis in the same way as for load inertia as it cannot be calculated logically. You need not enter the torque required for acceleration/deceleration.

*3 Servo delay and setting times must also be taken into consideration in the positioning time.

(**) Comments

3.3.2 Explanation of Items

3.3.2.1 Title

User name

Fill in this blank with the name of the user.

Kind of machine tool

Fill in this blank with a general name of machine tools, such as lathe, milling machine, machining center, and others.

Type of machine tool

Fill in this blank with the type of machine tool decided by machine tool builder.

CNC equipment

Fill in this blank with the name of CNC (16*i*-MB, 21*i*-TB, PM*i*-D, etc.) employed.

Spindle motor

Enter the specifications and output of the spindle motor. (This item is needed when selecting PSM.)

Axis

Fill in this blank with names of axes practically employed in CNC command.
If the number of axes exceeds 4 axes, enter them in the second sheet.

3.3.2.2 Specifications of moving object

Be sure to enter data in this row. Data entered here is needed for determining the approximate motor load conditions (inertia, load torque).

- Mass(weight) of driven parts

Enter the mass(weight) of driven parts, such as table, tool post, etc. by the maximum value including the weight of workpiece, jig, and so on. Do not include the weight of the counter balance in the next item in this item.

- Axis movement direction

Enter horizontal, vertical, slant, or rotation as the movement directions of driven parts such as the table and tool post.
Be sure to enter data because the axis movement direction is required for calculating the constant load torque and regenerative energy.

- Angle of the slant

Enter the angle which the movement direction forms with a horizontal surface only when the movement direction slants upward.
Be sure to enter data because the axis movement direction is required for calculating the constant load torque and regenerative energy.

- Counter balance

Enter the weight of the counter balance in the vertical axis, if provided.
Enter whether the counter balance is made by a weight or force as this influences inertia.

- Table support

Enter the type of table slide (e.g. rolling, sliding or static pressure).
Enter a special slide way material like Turcite, if used. Also enter the friction coefficient value. This item is significant in estimating the friction coefficient for calculating mainly the load torque.

- Ball screw

For a ball screw, enter the diameter, pitch, and length in order.
If a rack and pinion or other mechanism is used, also enter the traveling distance of the machine tool per revolution of the pinion.

- Rack and pinion

For a rack and pinion, enter the diameter and thickness of the pinion.

- Friction coefficient

Enter the friction coefficient of the table.

- Machine tool efficiency

This value is used for calculating the transfer efficiency of motor output on a machine tool. Standard value is 0.9.
Generally, a drop in transfer efficiency is expected if a reduction gear having a large deceleration rate is used.

- Total gear ratio

Enter the gear ratio between the ball screw and the servo motor, gear ratio between the final stage pinion and the servo motor in case of the rack pinion drive, or gear ratio between the table and the motor in case of rotary table.

3.3.2.3 Mechanical specifications

Enter basic data that is required for selecting the motor.
For details on how to calculate each of the items, see Section 3.2.

- Movement per rotation of motor

Enter the movement of the machine tool when the motor rotates one turn.
Example
- When the pitch of ball screw is 12 mm and the gear ratio is 2/3,
  12mm × 2/3 = 8 mm
- When the gear ratio is 1/72 in rotary table ;
  360° × 1/72 = 5°

- Least input increment CNC

Enter the least input increment of NC command. (The standard value is 0.001 mm.)

- Rapid traverse rate

Enter the rapid traverse rate required for machine tool specifications.

- Motor speed in rapid traverse

Enter the motor speed during rapid traverse.

- Motor shaft converted load inertia

Enter a load inertia applied by the moving object reflected on the motor shaft.
Do not include the inertia of the motor proper in this value. For details on this calculation, see Subsec. 3.2.3.
In the case of a linear shaft, enter the load inertia calculated by logical calculation if you enter the next item. In the case of a rotary shaft, however, the load inertia cannot be calculated by logical calculation.
Enter values to two digits past the decimal point. (e.g. 0.2865 → 0.29)

- Inertia of coupling, reduction gear and pulley

Enter load inertia applied on transfer mechanisms other than couplings, moving objects and ball screw.
Enter values to two digits past the decimal point. (e.g. 0.2865 → 0.29)

- Steady-state load torque

Enter the torque obtained by calculating the force applied for moving the machine tool and state-state components such as friction (including holding torque in the case of a gravity shaft) reflected on the motor shaft when it is rotating at a fixed speed. (Do not include any torque required for acceleration/deceleration in this item.) If details are unknown, use a value calculated logically from the weight and friction coefficient. Enter the steady-state load torque of the rotary axis in the same way as for load inertia as it cannot be calculated logically.
If the load torque values differ during lifting and lowering in the vertical axis, enter both values. Also, if the load torque values differ during rapid traverse and cutting feed, enter a notice to that effect.
Since torque produced in low speed without cutting may be applied even when the motor has stopped, a sufficient allowance is necessary as compared with the continued rated torque of the motor. Suppress this load torque so that it is lower than 70% of the rated torque.

- Cutting thrust

Enter the maximum value of the force applied during cutting by the force in the feed axis direction.

- Maximum cutting torque

Enter the torque value on the motor shaft corresponding to the maximum value of the above cutting thrust. When you enter this value, add the steady-state load to the motor shaft converted value for the cutting thrust.
Since the torque transfer efficiency may substantially deteriorate to a large extent due to the reaction from the slideway, etc. produced by the cutting thrust, obtain an accurate value by taking measured values in similar machine tools and other data into account.

- Maximum cutting duty / ON time

Enter the duty time and ON time with the maximum cutting torque in the above item applied.

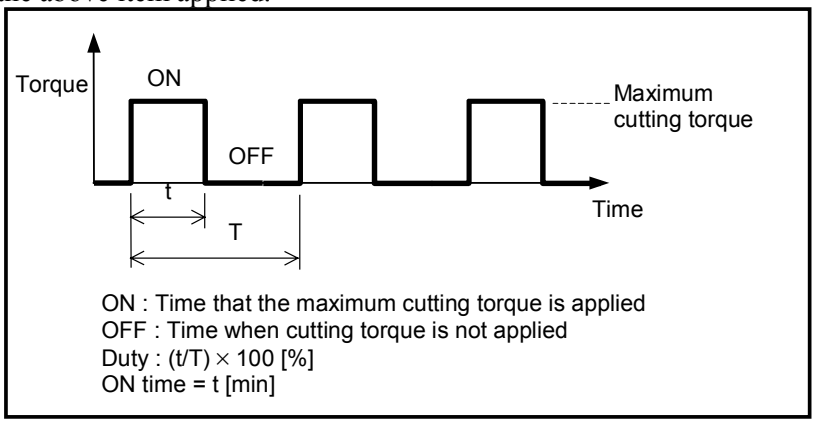

- Positioning distance

Enter the distance as a condition required for calculating the rapid traverse positioning frequency.
When an exclusive positioning device is used, enter this value together with the desired positioning time below.

- Required positioning time

Enter the required positioning time when an exclusive positioning device is used.
When the device is actually attached on the machine tool, note that servo delay and setting times must also be taken into consideration in the positioning time.

- In-position set value

Enter the in-position set value as a condition required for calculating the above positioning times when an exclusive positioning device is used.
Note that the positioning time changes according to this value.

- Rapid traverse positioning frequency

Enter the rapid traverse positioning frequency by the number of times per minute.
Enter whether the value is for continuous positioning over a long period of time or for intermittent positioning within a fixed period of time. (This value is used to check the OVC alarm and whether the motor is overheated or not by a flowing current during acceleration/deceleration, or to check the regenerative capacity of the amplifier.)

3.3.2.4 Motor specifications and characteristics

- Motor type

Enter the motor type, if desired.

- Pulsecoder

Enter the specifications (absolute, number of pulses: 65,536 or 131,072) of the feedback sensor (Pulsecoder) built into the motor.

- Shaft shape

Enter the shape of the motor shaft.

- Brake (Yes/No)

Enter whether or not the motor has a brake.

- Feed-forward during rapid traverse

Enter whether or not feed-forward control during rapid traverse is used.
Generally, feed-forward control can reduce the delay time in executing servo commands. However, overheating of the motor is more likely to occur as a higher torque is required for acceleration/deceleration.
Since mechanical shock increases in linear acceleration/deceleration, the bell-shaped acceleration/deceleration or fine acceleration/deceleration (FAD) function is generally used together with feed-forward control.

- Acceleration/deceleration time constant at rapid traverse

Enter the acceleration/deceleration time constant in rapid traverse.
The acceleration/deceleration time is determined according to the load inertia, load torque, motor output torque, and working speed.
The acceleration/deceleration mode in rapid traverse is linear acceleration/deceleration or feed-forward during rapid traverse + bell-shaped acceleration/deceleration. Enter T_1 only for linear acceleration/deceleration or T_1 and T_2 for feed-forward during rapid traverse + bell-shaped acceleration/deceleration.

Linear acceleration/deceleration

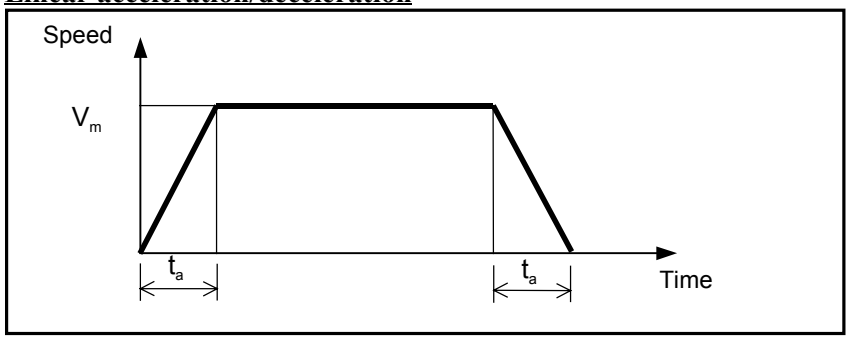

When cutting feed is important, enter the time constant in cutting feed.
The acceleration/deceleration mode in cutting feed is linear acceleration/deceleration, exponential acceleration/deceleration, or

bell-shaped acceleration/deceleration. Enter t_e only for the time constant in cutting feed.

Exponential acceleration/deceleration

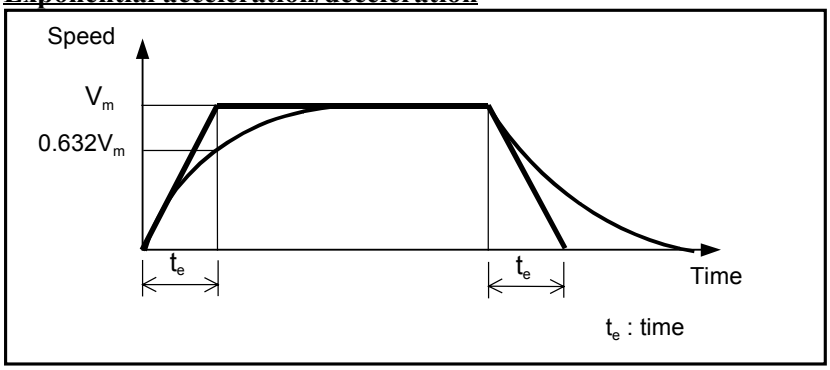

- Position loop gain

Fill in this blank with a value which is considered to be settable judging it from the inertia value based on experiences.
Since this value is not always applicable due to rigidity, damping constant, and other factors of the machine tool, it is usually determined on the actual machine tool. If the position sensor is mounted outside the motor, this value is affected by the machine tool rigidity, backlash amount, and friction torque value. Enter these values without fail.

- Dynamic brake stop distance

Enter the coasting distance when an abnormality occurs and the machine tool is stopped by dynamic braking with both ends of the motor power line shorted.

3.4 CHARACTERISTIC CURVE AND DATA SHEET

Performance of each motor model is represented by characteristic curves and data sheet shown below, which are given in Part II.

3.4.1 Performance Curves

The characteristic curves representing the "speed-torque characteristics" and "overload duty characteristic" are given for each motor model.

Speed-torque characteristics

Speed-torque characteristics indicate the relationship between the output torque and speed of the motor.
The motor can be operated continuously at any combination of speed and torque within the continuous operating zone. Within the intermittent operating zone outside the continuous operating zone, the motor must intermittently be used using the duty cycle curve.
The limit of continuous operating zone is determined under the following conditions.

- The ambient temperature for the motor is 20°C.
- The drive current of the motor is pure sine wave.

And this zone may be limited by the thermal protection of mounted precision instrument. (Pulsecoder)

The torque decreases by 0.11% for the βis series according to the negative temperature coefficient of magnetic materials every time the ambient temperature increases by 1°C after it exceeds 20°C.

The intermittent operating zone may be limited by the motor input voltage.
The following table shows the values when the input voltage is 200 V.

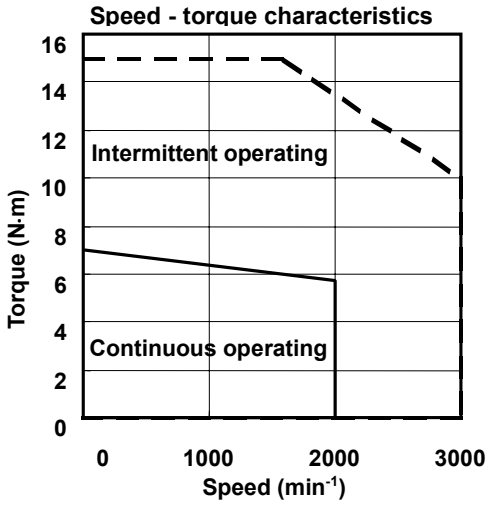

Fig.3.4.1(a) Example of β8/3000*is*

Overload duty characteristic

The percentage duty cycle indicates the ratio of the time during which torque can be applied to the total time of a single cycle.
The ON time indicates the time during which the torque is being applied.

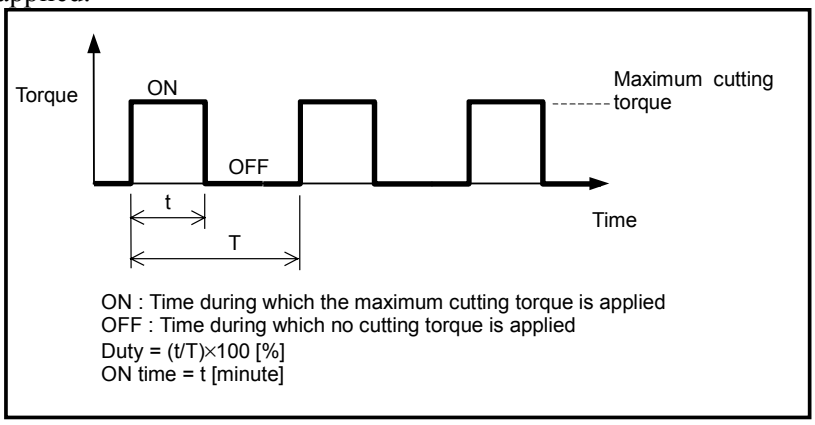

Overload duty characteristics indicate the relationship between the percentage duty cycle (%) and ON time (load time) in which the motor can intermittently be operated with no temperature limit in the range exceeding the continuous rated torque.

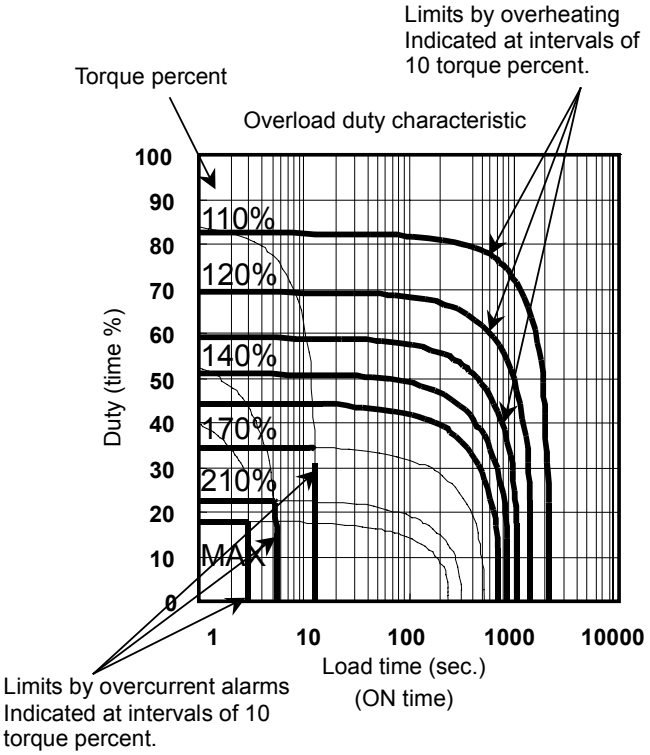

Fig.3.4.1(b) Overload duty characteristic for β8/3000*i*s

The duty calculation procedure is shown below:

<1> Calculate Torque percent by formula (b) below.
<2> Motor can be operated at any point on and inside the curve (according to the limits by overheating or overcurrent alarms) corresponding to the given over load conditions obtained form <1>.
<3> Calculate t_F by formula (a)

$$t_F = t_R \times \left(\frac{100}{Dutypercent} - 1 \right) \quad ---(a)$$

$$TMD = \frac{Load\ torque}{Continuous\ rated\ torque} \quad ---(b)$$

t_F : "OFF" time
t_R : "ON" time

The values of t_R and t_F obtained form the above mentioned procedure shows the ones limited by motor thermal conditions.

The motor temperature limits for determining overload duty curves are determined according to the motor temperature limit (overheat alarm) and according to the soft thermal function of monitoring the current by servo soft for a rapid increase in temperature (overcurrent alarm).
The overload duty characteristic determined according to the overheat alarm is represented with a curve within a relatively long time range of at least about 100 seconds of the load time. That determined according to the overcurrent alarm is represented with a curve within a relatively short time range of up to about 100 seconds. The final overload duty characteristic is represented with the curve described using either characteristic value, whichever is shorter. For the soft function of monitoring overcurrent, the settings differ depending on the motor. If the motor is in the overload status at a motor speed of about 0, an overcurrent (OVC) alarm may be issued for a time shorter than described. Note that another restriction may be imposed depending on the use condition since driving device (such as an amplifier), Pulsecoder, and other devices contain a thermal protection device.

3.4.2 Data Sheet

The data sheet gives the values of motor parameters relating to the performance.
The values of parameters are those under the following conditions.

- The ambient temperature for the motor is 20°C.
- The error is ±10%.
- The drive current of the motor is pure sine wave.

The following parameters are given on the data sheet:

Stall torque : T_s [N·m]

Torque that allows the motor to operate continuously at 0 min^{-1}.

Stall current : I_s [Arms]

Maximum effective current value that allows the motor to operate continuously at 0 min^{-1}.

Rated output : P_r [kW]

Maximum speed at which the motor can continuously operate

Rating rotation speed : N_r [min^{-1}]

Maximum speed at which the motor can continuously operate

Maximum rotation speed : N_{max} [min^{-1}]

Maximum speed at which the motor can operate

Maximum torque : T_{max} [min^{-1}]

Maximum motor torque
More specifically, torque with which the motor can intermittently be operated within the current restricted range (from 0 min^{-1} to the beginning of dropping of the shoulder)
The maximum torque value is generally the product of the torque constant of each motor and the current limit of the amplifier. This value varies according to fluctuations in the power supply, motor parameters, and limits of the amplifier. For some models, when the maximum current flows through the motor, the maximum torque may be lower than the calculated value due to magnetic saturation and other factors.

Motor inertia : J_m [$kg·m^2$] [$kgf·cm·sec^2$]

Motor rotor inertia
The values for the standard specification with no brake and for the specification with a brake are given.

Torque constant : K_t [N·m/Arms] [kgf·cm/Arms]

This is known as torque sensitivity and represents the torque developed per ampere of phase current. This value is a motor-specific constant, and is calculated by the flux distribution and location of coils in the armature, and the dimensions of the motor.

The torque constant decreases by 0.11% for the β*is* series according to the temperature coefficient of the magnet every time the temperature of the magnet increases by 1°C after it exceeds 20°C.

Back EMF (electromotive force) constant: Kv [Vrms·sec] [Vrms·sec/rad]

This indicates the strength of a permanent magnet and is a motor-specific constant. This is the voltage generated when the rotor is externally and mechanically rotated.

Back EMF is a motor-specific constant, and is also calculated by the flux distribution and location of coils in the armature, and the dimensions of the motor. Expressed in [min^{-1}] units, back EMF has the dimensions of [$Vrms/min^{-1}$]. The relationship can be given as:

[Vrms·sec/rad] = [9.55×Vrms/min^{-1}] (9.55=60/2/π)

The back EMF constant is indicated as the RMS voltage per phase, so multiple by $\sqrt{3}$ to obtain the actual terminal voltage.

The relationship between the torque constant (K_t) and back EMF constant (K_v) can also be given as:

SI unit

$$K_t \quad [N \cdot m / Arms] = 3K_v \quad [Vrms \cdot \sec / rad]$$

Gravitational system of units

$$K_t \quad [kgf \cdot cm / Arms] = 30.6K_v \quad [Vrms \cdot \sec / rad]$$

For this reason, when back EMF constant (K_v) drops lower than the demagnetization of the magnet, the torque constant (K_t) also drops by the same ratio.

Winding resistance : R [Ω]

Resistance per phase of the motor

Mechanical time constant : t_m [sec]

This is a function of the initial rate of rise in velocity when a step voltage is applied. It is calculated from the following relationship.

$$t_m = \frac{J_m \cdot R_a}{K_t \cdot K_v}$$

J_m : Rotor inertia [$kg \cdot m^2$]

R_a : Resistance of the armature [Ω]

Thermal time constant : t_t [min]

This is a function of the initial rate of rise of winding temperature at rated current. It is defined as the time required to attain 63.2 percent of the final temperature rise.

Axis friction torque : T_f [N·m] [kgf·cm]

This is the no-load torque required just to rotate the rotor.

Mass : w [kg]

This is the mass of the motor.
The masses of the motor with brakes and that without brakes are indicated.

Maximum current of applicable servo amplifiers

Applicable servo amplifier modules are briefly described.
For more specific servo amplifier modules, see Subsection I-2.2.1, "Applicable Amplifiers."

4 CONDITIONS FOR APPROVAL RELATED TO THE IEC60034 STANDARD

This chapter describes the conditions the following FANUC βis series AC servo motors must clear before they can be approved for the IEC60034 standard. For details on EMC compliance authorization, refer to the separate manual "Compliance with EMC Directives."

4.1 TYPES OF MOTORS TO BE APPROVED

The following FANUC AC Servo Motor β*i*s series can comply with the IEC60034 standard if you follow the descriptions in this chapter.
The FANUC AC Servo Motor β*i*s series can be driven only by the FANUC Servo Amplifiers for 200 to 230 VAC.

β*i*s series

Model name	Motor specification number
β0.2/5000*i*s	A06B-0111-Bxxx
β0.3/5000*i*s	A06B-0112-Bxxx
β0.4/5000*i*s	A06B-0114-Bxxx
β0.5/5000*i*s	A06B-0115-Bxxx
β1/5000*i*s	A06B-0116-Bxxx
β2/4000*i*s	A06B-0061-Bxxx
β4/4000*i*s	A06B-0063-Bxxx
β8/3000*i*s	A06B-0075-Bxxx
β12/3000*i*s	A06B-0078-Bxxx
β22/2000*i*s	A06B-0085-Bxxx

4.2 APPROVED SPECIFICATIONS

The following specifications are approved for the IEC60034 standard.

4.2.1 Motor Speed (IEC60034-1)

The "rated-output speed" and "allowable maximum speed" are given on the data sheet in Part II.
The rated-output speed is the speed which specifies the rated output.
The allowable maximum speeds are specified in such a way that the approval conditions of the IEC60034-1 standard, as they relate to rotational speed, are satisfied.
When the allowable maximum speeds are used, the characteristics are not guaranteed.

4.2.2 Output (IEC60034-1)

The "rated output" available with a motor is given on the data sheet in Part II. The rated output is guaranteed as continuous output for the rated-output speed under Insulation Class F.

The output in an intermittent operation range is not specified.

4.2.3 Protection Type (IEC60034-5)

Motor protection confirms to IP65. The Pulsecoder connector is waterproof when engaged.

IP6x: Completely dust-proof machine
This structure completely prevents dust from entering the machine.

IPx5: Sprinkle-proof machines
A sprinkle-proof machine shall not suffer inadvertent influence when they are exposed to water sprinkled from nozzles at any angle to the machine.

The conditions of the IPx5 type test are as follows:

Nozzle inside diameter.....ϕ6.3 [mm]
Amount of sprinkled water ..... 12.5 [liters/minute]
Water pressure at the nozzle .....30 [kPa]
Sprinkle time per a surface of 1 m^2.....1 [minute]
Minimum required time ..... 3 [minutes]or more
Distance between the nozzle and machine .. Approximately 3 [m]

> ⚠ **CAUTION**
> IPx5 evaluates machines for waterproofness in a short-term test as described above, allowing chances that the machines may get dry after the test. If a machine is exposed to liquids other than water or so continuously to water that it cannot get dry, it may suffer inadvertent influence even if the degree of exposure is low.

4.2.4 Cooling Method (IEC60034-6)

All models of the FANUC AC servo motor βiS series use the fully-enclosed natural cooling system. The IC code is IC410.

4.2.5 Mounting Method (IEC60034-7)

The motors can be mounted by the following methods.
IMB5:Flange mounting with the shaft facing sideways(from the rear)
IMV1:Flange mounting with the shaft facing upward(from the rear)
IMV3:Flange mounting with the shaft facing downward(from the rear)

4.2.6 Heat Protection (IEC60034-11)

The heat protection type is as listed below:

T P 2 1 1

- 1 : Temperature rise limit category 1 for heat protection
- 1 : Stop only at stage 1 (no warning)
- 2 : Protection for gradual and abrupt overload

4.2.7 Grounding (IEC60204-1)

For each servo motor, continuity between the ground terminal and housing of the power connector has been checked based on the IEC60204-1 safety standard and it has been ensured that it satisfies the standard.

4.2.8 Remarks

For details on EMC compliance authorization, refer to the separate manual "Compliance with EMC Directives"

4.3 CONNECTORS REQUIRED FOR APPROVAL

4.3.1 Power Line Connectors (for Models β0.2*i*S and β0.3*i*S)

The motor power line must be connected using the following specified connectors.

Model Name	Specification (Manufacturer model number)		Dedicated Tools Specification	Manufacture
β0.2*i*S β0.3*i*S	Housing specification	3-178129-6	Crimping tool 914596-3 Extractor 234168-1	Tyco Electronics AMP
	Contact specifications	1-175218-2		

4.3.2 Power Line Connectors (for Models β0.4*i*S to β1*i*S)

The motor power line must be connected using the following specified connectors.

Model Name	Specification (Manufacturer model number)			Dedicated Tools Specification	Manufacture
β0.4*i*S β0.5*i*S β1*i*S	Connector body specifications	Straight type	54983-0000	Crimping tool 57406-5000 Extractor 57406-6000	MOLEX JAPAN Co., Ltd.
		Elbow type	55765-0000		
	Contact specifications	56052-8100			

4.3.3 Power Line Connectors (for Models β2*is* and β4*is*)

The motor power line must be connected using the following specified connectors.

Model Name	Specification (Manufacturer model number)			Dedicated Tools Specification	Manufacture
β2*is* β4*is*	Standard : Straight type	Connector kit with a contact	1473063-2	Crimping tool 91579-1 Extractor 1463329-1	Tyco Electronics AMP
	Elbow type	Connector kit with a contact	1473393-2		

- Use leads that meet the following specifications:

Brake	Number of Cores	Cable Size	Insulation external diameter	Cable external diameter (*)
Without brake	4 or more	AWG#18 to 16 (0.85 to 1.25mm^2)	ϕ1.8 to 2.8 mm	ϕ9.9 to 11.4mm
With brake	6 or more			

(*) Note that water-proof performance may be impaired if a cable of inappropriate external diameter is used.

4.3.4 Power Line Connectors (for Models β8*i*S to β22*i*S)

The motor power cable must be connected using the connectors and cable clamps specified below.

Motor model name	Plug connector maker specification		Cable clamp specification	Connector maker name
β8*i*S β12*i*S	Straight	H/MS3106A18-10S-D-T(10)	H/MS3057-10A(10)	Hirose Electric
	L-shape type	H/MS3108A18-10S-D-T(10)		
β22*i*S	Straight	JL04V-6A22-22SE-EB JL04V-6A22-22SE-EB1	JL04-2022CK-(14) JL04-2428CK-(20)	Japan Aviation Electronics Industry
	L-shape type	JL04V-8A22-22SE-EB JL04V-6A22-22SE-EB1		

- TÜV have certified that the plug connector and cable clamp mentioned above, when combined with the FANUC β*i*s series servo motors, satisfy the VDE0627 safety standard. As indicated in the table below, several manufacturers offer other plug connectors. For information about whether the plug connectors satisfy the safety standard when combined with the FANUC β*i*s series servo motors, contact the corresponding manufacturer. Contact the manufacturers if you require details of their products.

Manufacturer	Product series name
Hirose Electric (HRS)	H/MS310 TÜV-conforming series
Japan Aviation Electronics Industry (JAE)	JL04V series
DDK Ltd. (DDK)	CE05 series

- If a cable or conduit hose seal adapter is used, consult an appropriate connector maker.

5 FEEDBACK SENSOR

All AC servo motors contain a Pulsecoder (optical encoder) as a feedback sensor which detects position and velocity.
Separate type position sensors are also available for detecting a position by attaching directly to a ball screw or machine.

5.1 PULSECODER

All AC servo motors feature a Pulsecoder (optical encoder).
The Pulsecoder outputs position information and an alarm signal.
The outline drawing of a Pulsecoder is not given in this section because it is contained in a motor. See the outline drawing of each motor model.

5.1.1 Types of Pulsecoders and Designation

The following table lists the types of Pulsecoders.

Pulsecoder type	Resolution [Division/rev]	Absolute/ incremental	Applicable motor
βA64B	65,536	Absolute	β0.2*i*S, β0.3*i*S
β64*i*A	65,536	Absolute	β0.4*i*S to β1*i*S
β128*i*A	131,072	Absolute	β2*i*S to β22*i*S

For how to specify a Pulsecoder, see the description on how to specify each motor in Part II because a Pulsecoder is specified together with a motor.

5.1.2 Connecting a Pulsecoder

Layout of connector pins

The signals of the β*i* series Pulsecoder are arranged as follows:

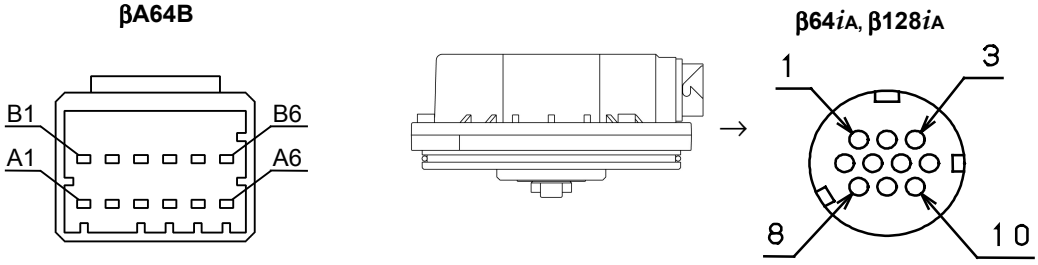

Signal name	Pin No.		
	βA64B	β64*i*A	β128*i*A
SD	A4	-	-
*SD	B4	-	-
REQ	A3	-	-
*REQ	B3	-	-
RD	-	6	6
*RD	-	5	5
+5V	A2, B2	8,9	8,9
0V	A1, B1	7,10	7,10
FG	-	-	3
+6V	A5	4	4

Connector kits

For information on connectors and crimping jigs required for creating a feedback cable, see Subsec. 2.2.3.

NOTE
If the motor is movable or a flexible cable is connected to a connector, excessive force may be applied to the connector. In this case, fix the feedback cable to prevent the connector from being broken.

Connecting a Pulsecoder to an amplifier

For cables connecting a Pulsecoder and amplifier, refer to "FANUC SERVO AMPLIFIER α*i* series Descriptions (B-65282EN)" and "FANUC SERVO AMPLIFIER β*i* series Descriptions (B-65322EN)."

5.1.3 Absolute-type Pulsecoder

When the NC is turned off, the Pulsecoder position detection function is backed up by battery. So, when the NC is next turned on, the operator does not have to perform reference position return.
For backup, a battery unit must be installed in the NC or servo amplifier.
If a low-battery indication appears on the NC, renew the battery as soon as possible.
For the β64*i*A and β128*i*A Pulsecoders, the function is backed up for about 10 minutes by a backup capacitor when the battery is removed. In the backup status, the battery can be replaced when the power to the NC or servo amplifier is off.
The operator does not also have to perform reference position return after replacing the feedback cable or servo amplifier. The βA64B Pulsecoder contains no backup capacitor.

5.2 SEPARATE PULSECODER

For detecting a position by attaching directly to a ball screw or a machine, use a separate Pulsecoder.

5.2.1 Separate Pulsecoder Type and Designation

Separate Pulsecoder are available. Features and rapid traverse-related limitations are the same as the built-in Pulsecoder.

Separate Pulsecoder name	Resolution	Allowanble maximum speed	Absolute/ incremental	Ordering number
αA1000S	1,000,000 /rev	4000min^{-1}	Absolute	**A860-0372-T001**

5.2.2 Separate Pulsecoder Specifications

Pulse coder αA1000S

Item		Specification
Power voltage		5 [V]±5%
Current consumption		Up to 0.3 [A]
Working temperature range		0 to +60 [°C]
Resolution		1,000,000 [/rev.]
Maximum speed of rotation		4000 [min^{-1}]
Input shaft inertia		Up to 1×10^{-4} [kg·m^2]
Input shaft startup torque		Up to 0.1 [N·m]
Input shaft allowable load	Radial	100 [N]
	Axial	50 [N]
Shaft diameter runout		0.02×10^{-3}[m]
Structure		Dust-proof, drip-proof (IP55 or equivalent: when water-proof connector is fitted)
Vibration resistance acceleration		5 [G] (50 to 2,000[Hz])
Weight		Approx. 0.75 [kg]

5.2.3 Connecting a Separate Type Pulsecoder

The layout of connector pins is shown below.
For the connection diagram for separate type Pulsecoders, refer to the relevant NC connection manual.

Layout of Connector Pins of Pulsecoder αA1000S

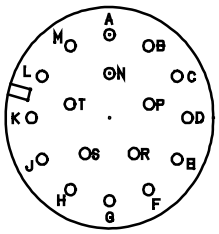

3102A20-29PW

Signal name	Pin No. αA1000S 3102A20-29P
SD	A
*SD	D
REQ	F
*REQ	G
+5V	J,K
0V	N,T
Shield	H
+6VA	R
0VA	S

5.2.4 Outline Drawings of Separate Pulsecoder

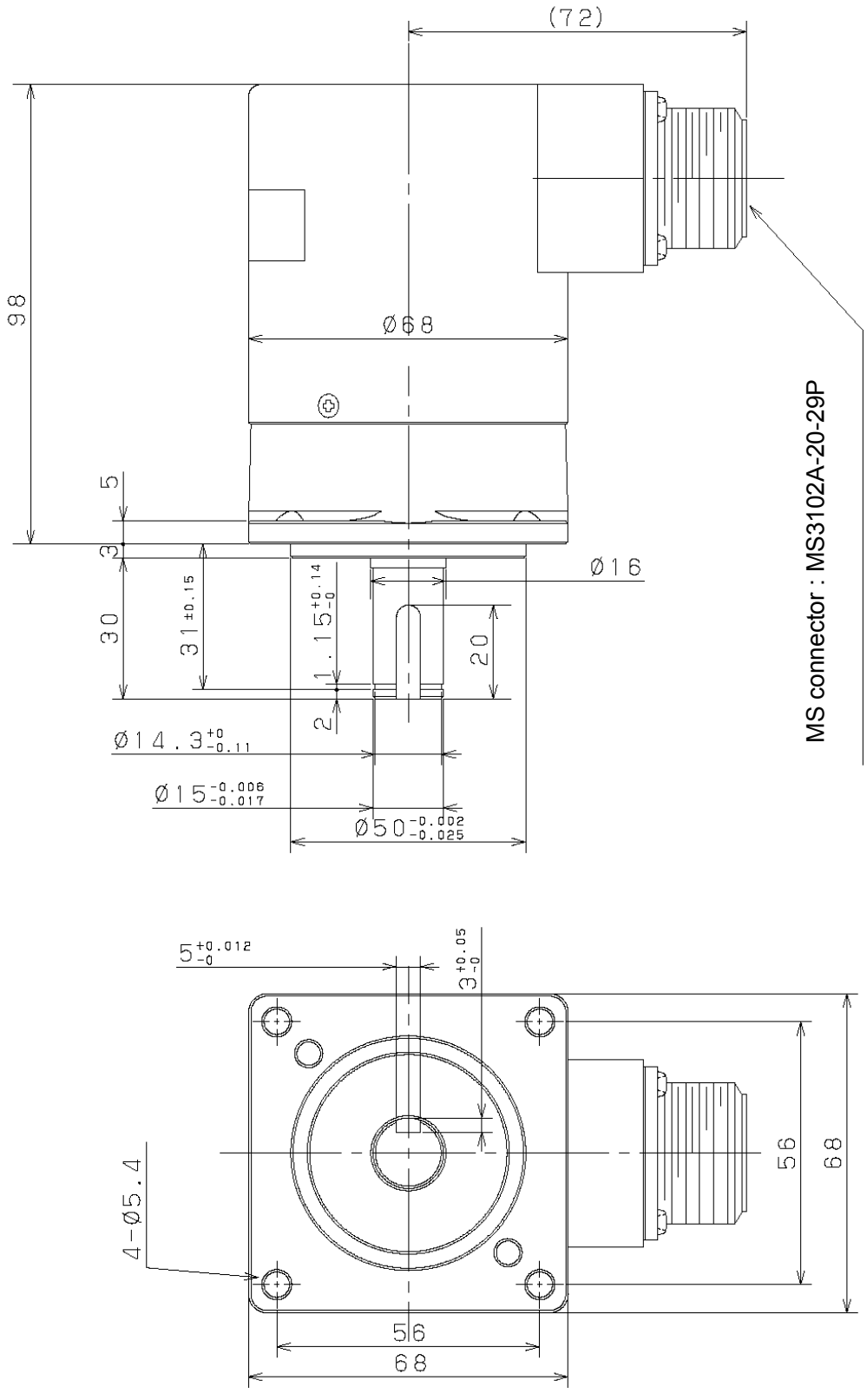

Fig.5.2.4 Pulsecoder αA1000S

5.2.5 Cautions in Using a Separate Type Pulsecoder

Pay attention to the following items when using the separate Pulsecoder.

- Increase the machine rigidity between the servo motor and the Pulsecoder to minimize mechanical vibration. If the machine rigidity is low or the structure vibrates, poor performance, over shoot is likely to occur.

- When the separate Pulsecoder is used, the influence of gear, ball screw pitch error or table inclination is decreased and the positioning accuracy and geometrical accuracy (roundness, etc.) are increased, but the smoothness may deteriorate due to the elasticity in the machine between the servo motor and the separate Pulsecoder.

- It is necessary to use the built-in Pulsecoder with a resolution equal to or finer than that of the separate Pulsecoder.

To connect the separate Pulsecoder to the NC, connect only the signals described in the connecting manual.
When the other signal is connected, the unit may malfunction.

6 BUILT-IN BRAKE

Some models of the AC servo motor β*is* series use motors that contain a holding brake to prevent falling along a vertical axis.
This chapter explains the specifications of built-in brakes and gives cautions.
The motor with a built-in brake differs from that with no brake in outside dimensions. For the outside dimensions, see the outline drawing of each motor model in Part II.

6.1 BRAKE SPECIFICATIONS

The specifications of built-in brakes are listed below.

Motor model		Unit	β0.2*i*s β0.3*i*s	β0.4*i*s β0.5*i*s	β1*i*s	β2*i*s β4*i*s	β8*i*s β12*i*s	β22*i*s
Brake torque		Nm	0.32	0.65	1.2	3	8	35
		kgf·cm	3.3	6.6	12	31	82	357
Response time	Release	msec	40	40	40	60	160	160
	Brake	msec	20	20	20	10	30	30
Power supply	Voltage	VDC	24 (±10%)					
	Current	A	0.3	0.5	0.5	0.9	1.1	1.2
	Wattage	W	7	12	12	22	26	29
Weight increase		kg	Approx. 0.2	Approx. 0.4	Approx. 0.4	Approx. 1.0	Approx. 2.2	Approx. 6.0
Inertia increase		$kg \cdot m^2$	0.000002	0.000009	0.000009	0.00002	0.00007	0.0006
		$kgf \cdot cm \cdot s^2$	0.00002	0.00009	0.00009	0.0002	0.0007	0.006

The values shown above are standard values at 20°C.

6.2 CONNECTING A BRAKE

6.2.1 Layout of Connector Pins

The following shows the shape and pin arrangement of the brake connectors.

Models β0.2*i*s and β0.3*i*s

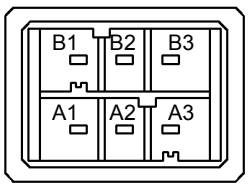

Connections: B2=BK, B3=BK
(Connect to inside of power connector.)
(A1=U, A2=V, A3=W, B1=GND)

* BK indicates a power supply (24 VDC, 0 VDC) for the brake. The brake is nonpolarized.

Models β0.4*i*s to β1*i*s

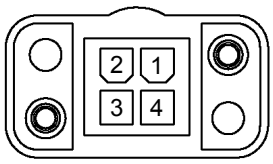

Connections: 1=BK, 2=BK, 4=GND

* BK indicates a power supply (24 VDC, 0 VDC) for the brake. The brake is nonpolarized.

Models β2*i*s to β4*i*s

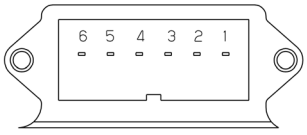

Connections: 5=BK, 6=BK
(Connect to inside of power connector.)
(1=U, 2=V, 3=W, 4=GND)

* BK indicates a power supply (24 VDC, 0 VDC) for the brake. The brake is nonpolarized.

Models β8*i*s to β22*i*s

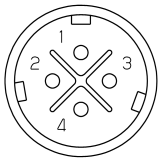

Connections: 1=BK, 2=BK, 3=NC(Not Connected), 4=GND(Note)

* BK indicates a power supply (24 VDC, 0 VDC) for the brake. The brake is nonpolarized.

NOTE
Since pin 4 is connected to the brake cabinet, it can be used when the shield wire of a brake cable needs to be connected.

6.2.2 Connection of the Brakes

Configure a brake circuit by referencing the following brake connection diagrams and the recommended parts shown in the following section.

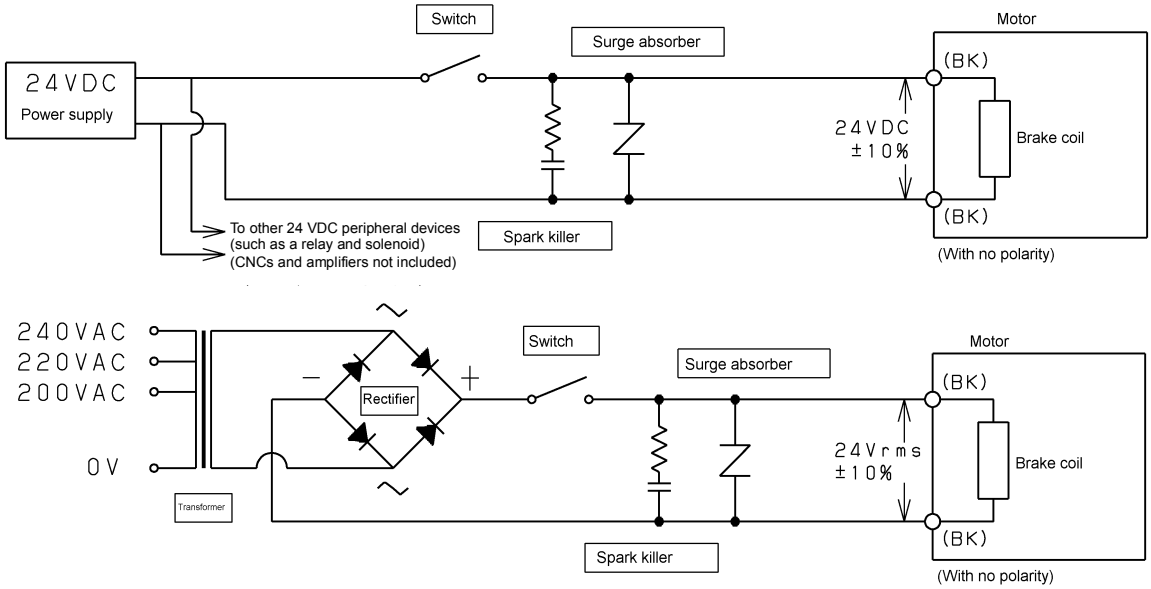

1 Use a 24 VDC power supply as the power supply for the βis series servo motor brake. Power (equivalent to 24 Vrms) produced by full-wave rectification after transforming commercial power (50 Hz/60 Hz) is also available.
2 Use a power supply separate from the 24-V power supply for the CNC and amplifier as the power supply for the brake. If the control power supply is also used for the brake, an CNC or amplifier malfunction or another danger may occur. The power supply for a relay, solenoid, or another peripheral device can be used for the brake. Be careful of the power capacity and changes in voltage due to changes in load.
3 For full-wave rectification, transform the secondary side voltage obtained during energization of the brake into approximately 29 VAC by taking voltage drop in the rectifier or cable into account. In this case, check the power capacity and power voltage fluctuations sufficiently and then make sure the fluctuations of the voltage applied to the brake during energization falls within 24 Vrms ±10%. Switch the transformer's primary side input to a desired position such as 100-110-120 VAC or 200-220-240 VAC.
4 If the contact is installed on the DC side (at the position shown in the figure), the life of the contact is generally shortened due to the surge voltage at brake off. Provide an adequate contact capacity and always use a surge absorber and spark killer for protecting the contact.
5 You can use either positive or negative power pin to connect the brake because the brake coil is nonpolarized.
6 Use a shielded cable as required.

6.2.3 Recommended Parts in Brake Circuits

The following table lists the recommended parts to be used as components of a brake circuit and their specifications.

All models of the βis series

Name	Model No.	Name of Manufacturer	Specifications	FANUC Procurement Dwg. No.
Rectifier	D3SB60 (Note)	SHINDENGEN ELECTRIC MFG. CO., LTD.	Withstand voltage 400 V min. Maximum output current: 2.3 A (with no fin)	A06B-6050-K112
Switch	-	-	Rated load capacity (resistance load) 250VAC 10A / 30VDC 10A or more	-
Spark killer	XEB0471	OKAYA ELECTRIC IND. CO., LTD.	47Ω / 0.1μF Withstand voltage 400 V min.	-
Surge absorber	ERZV10D820	Matsusihita Electric Industrial Co., Ltd.	Varistor voltage 82V Max. allowable voltage 50VAC	-

NOTE
At an ambient temperature of 20°C, the temperature of the rectifier rises to about 60°C when one brake axis is used or to about 90°C when two brake axes are used. Use a radiator fin as required.

6.3 CAUTIONS

Pay attention to the following points when motors with built-in brakes are used.

1 A built-in brake is used as a holding brake to prevent falling along an axis at servo off. This brake functions as a brake at an emergency stop or power failure, but cannot be used to decrease the stop distance during ordinary deceleration.

2 The brake cannot be used as assistance to stop the motor in the stopped state with energization of the motor. This causes an abnormal heat of the motor.

3 Match the timing of brake release (axis release) to the timing of servo on (motor energization) as much as possible.
Similarly, match the timing of brake start (axis fix) to the timing of servo off as much as possible.

6.4 REDUCING THE BRAKE SHAFT FALL AMOUNT

During use of a motor with a brake, the amount of falling along an axis at a power failure or emergency stop, or when the CNC power supply is turned off during excitation of the motor may become an issue. To operate the brake immediately and reduce the amount of falling along an axis to a minimum, note the following points:

(1) To operate the brake immediately, the switch and relay for controlling on and off must be installed on the DC side (at the position shown in the following figure) of the break circuit.
If the contact is installed on the AC side (between the transformer's secondary side and rectifier), it takes time until braking starts because of the current returned to the rectifier diodes.

(2) To reduce the amount of falling along a vertical axis, the switch or relay must be turned off at a power failure as soon as possible. To turn the relay off immediately at a power failure, it is effective to supply the relay driving power from the main power supply whenever possible as shown in the following figure.

(3) To prevent the shaft from falling during an emergency stop, it is sometimes effective to use the "brake control function" in the servo software. This function enables continuous excitation of the motor until the motor built-in brake operates.
For details, see Parameter Manual (B-65270EN).

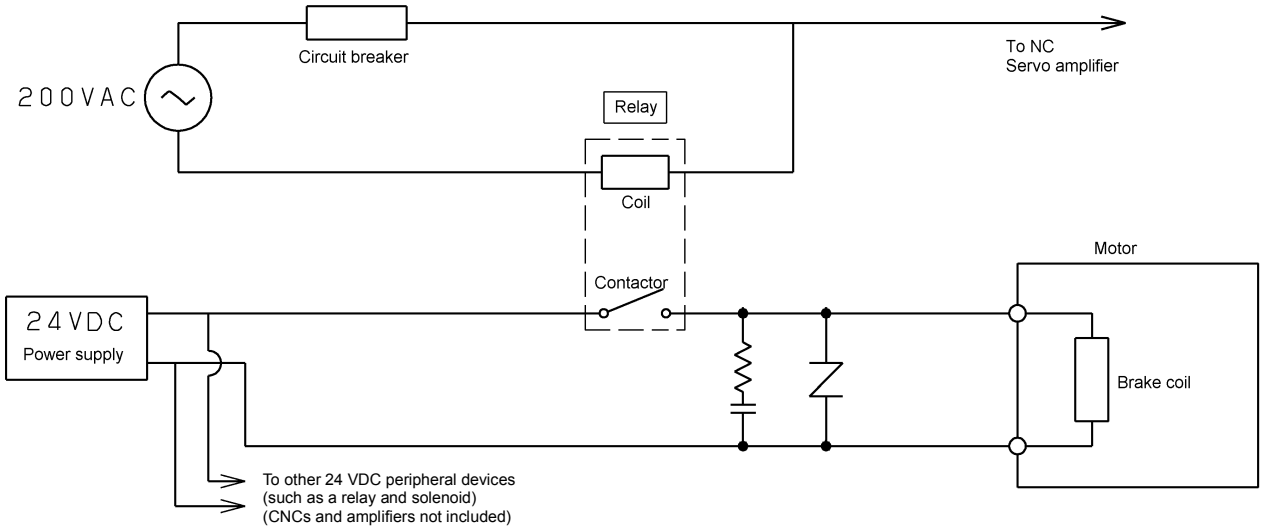

II. FANUC AC SERVO MOTOR βis SERIES

1 TYPES OF MOTORS AND DESIGNATION

The types and specifications of βiS series servo motors are described as follows.

Models β0.2/5000*i*S and β0.3/5000*i*S

A06B-011x-By0z

x

1	:	Model β0.2/5000*i*S
2	:	Model β0.3/5000*i*S

y

1	:	Straight shaft
4	:	Straight shaft with the 24VDC brake

z

3	:	Pulsecoder βA64B

Models β0.4/5000*i*S, β0.5/5000*i*S, and β1/5000*i*S

A06B-011x-By0z

x

4	:	Model β0.4/5000*i*S
5	:	Model β0.5/5000*i*S
6	:	Model β1/5000*i*S

y

1	:	Straight shaft
4	:	Straight shaft with the 24VDC brake

z

3	:	Pulsecoder β64*i*A

Models β2/4000*i*s, β4/4000*i*s, β8/3000*i*s, β12/3000*i*s, and β22/2000*i*s

A06B-00xx-By0z

xx

61	:	Model β2/4000*i*s
63	:	Model β4/4000*i*s
75	:	Model β8/3000*i*s
78	:	Model β12/3000*i*s
85	:	Model β22/2000*i*s

y

0	:	Taper shaft
1	:	Straight shaft
3	:	Taper shaft with the 24VDC brake
4	:	Straight shaft with the 24VDC brake

z

3	:	Pulsecoder β128*i*A

For these models, a tapered shaft is standard.

2 SPECIFICATIONS AND CHARACTERISTICS

This chapter describes the specifications and characteristics of FANUC AC servo motor βis series.
First section describes the common specifications to all motors, and next section describes the individual specifications and characteristics in the form of data sheet.

2.1 COMMON SPECIFICATIONS

This section describes the common specifications to FANUC AC servo motor β*i*s series.

Common specifications

- Ambient temperature : 0 to 40°C
- Ambient humidity : 80%RH or less (no dew)
- Installation height : Up to 1,000 meters above the sea level
- Ambient vibration : Not exceed 5G
- Insulation class : Class F
- Protection type : IP65
- Cooling method : Fully closed,
  Cooled by a natural air flow
- Heat protection : TP211
- Mounting method : IMB5, IMV1, IMV3

For details on these items, refer to "I-2.1 Environment to use the servo motor", "I-4.2 Specifications of approval servo motors".

Allowable axis load

Motor Model	Radial load	Axial load	Front bearing (reference)
β0.2/5000*i*s β0.3/5000*i*s	63 [N] (6.4 [kgf])	39 [N] (4 [kgf])	699
β0.4/5000*i*s β0.5/5000*i*s β1/5000*i*s	196 [N] (20 [kgf])	49 [N] (5 [kgf])	6902
β2/4000*i*s β4/4000*i*s	245 [N] (25 [kgf])	78 [N] (8 [kgf])	6003
β8/3000*i*s β12/3000*i*s	686 [N] (70 [kgf])	196 [N] (20 [kgf])	6205
β22/2000*i*s	1960 [N] (200 [kgf])	588 [N] (60 [kgf])	6208

For details on these items, refer to "I-2.3.2 Allowable Axis Load for a Servo Motor"

Shaft runout precision

Motor Model	Shaft dia. runout	Rabbet dia. eccentricity	Mounting face runout
β0.2/5000*i*S β0.3/5000*i*S	Max. 0.02mm	Max. 0.04mm	Max. 0.06mm
β0.4/5000*i*S β0.5/5000*i*S β1/5000*i*S	Max. 0.02mm	Max. 0.04mm	Max. 0.06mm
β2/4000*i*S β4/4000*i*S	Max. 0.02mm	Max. 0.04mm	Max. 0.06mm
β8/3000*i*S β12/3000*i*S	Max. 0.02mm	Max. 0.04mm	Max. 0.06mm
β22/2000*i*S	Max. 0.03mm	Max. 0.05mm	Max. 0.07mm

For details on these items, refer to "I-2.3.3 Shaft runout precision of the servo motor".

2.2 CHARACTERISTIC CURVE AND DATA SHEET

This section describes the individual specifications and characteristics of FANUC AC servo motor βis series.in the form of data sheet.
For details on these items, refer to "I-3.4 Characteristic curve and data sheet".

Model βO.2/5000is Specification A06B-0111-B□0□

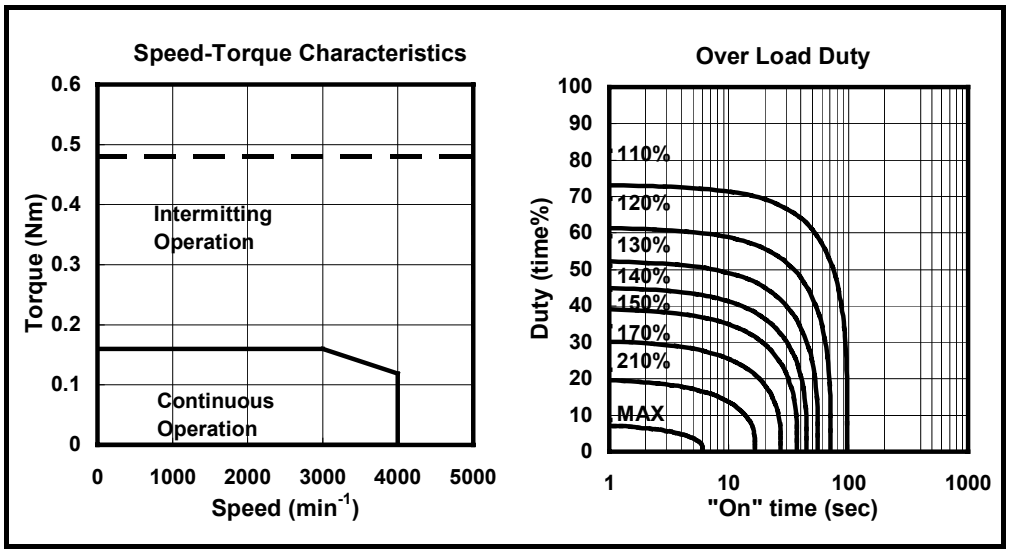

Data sheet

Parameter	Symbol	Value			Unit
Stall Torque (*)	Ts	0.16 1.6			Nm kgfcm
Stall Current (*)	Is	0.84			A (rms)
Rated Output (*)	Pr	0.05 0.07			kW HP
Rating Speed	Nr	4000			min^{-1}
Maximum Speed	Nmax	5000			min^{-1}
Maximum Torque (*)	Tmax	0.48 4.9			Nm kgfcm
Rotor Inertia	Jm	0.0000019 0.0000194			kgm^2 $kgfcms^2$
Rotor Inertia (with Brake)	Jm	0.0000039 0.0000398			kgm^2 $kgfcms^2$
Torque constant (*)	Kt	0.191 1.95			Nm/A (rms) kgfcm/A (rms)
Back EMF constant (1phase) (*)	Ke Kv	6.7 0.064			V (rms)/1000 min^{-1} V (rms)sec/rad
Armature Resistance (1 phase) (*)	Ra	6.0			Ω
Mechanical time constant	tm	0.0009			s
Thermal time constant	tt	5			min
Static friction	Tf	0.02 0.2			Nm kgfcm
Weight	w	0.33			kg
Weight (with Brake)	w	0.55			kg
Maximum Current of Servo Amp.	Imax	4			A (peak)

(*) The values are the standard values at 20℃ and the tolerance is ±10%.
The speed-torque characteristics very depending on the type of software, parameter setting, and input voltage of the digital servo software. (The above figures show average values.)
These values may be changed without notice.

Model βO.3/5000is Specification A06B-0112-B□0□

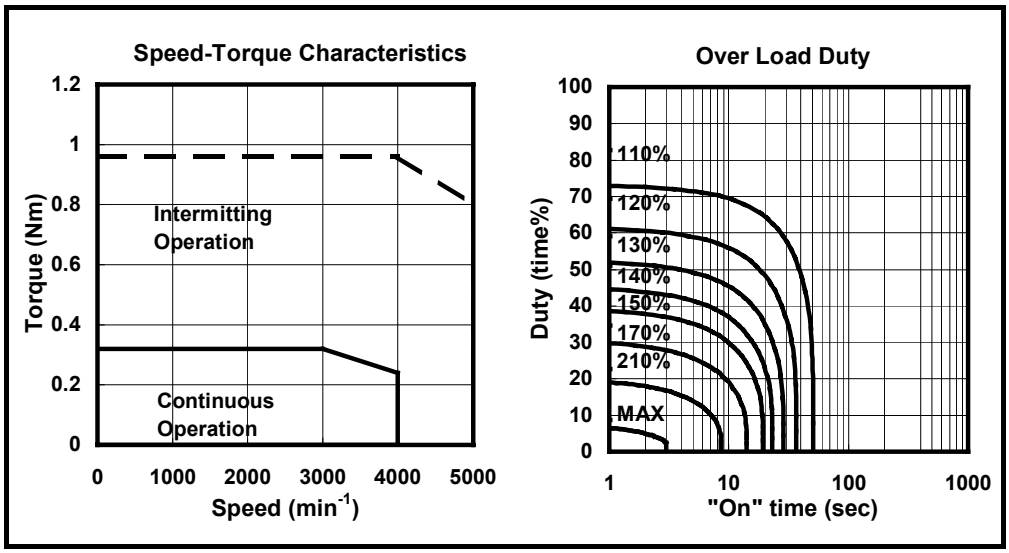

Data sheet

Parameter	Symbol	Value			Unit
Stall Torque (*)	Ts	0.32			Nm
		3.3			kgfcm
Stall Current (*)	Is	0.84			A (rms)
Rated Output (*)	Pr	0.1			kW
		0.13			HP
Rating Speed	Nr	4000			min^{-1}
Maximum Speed	Nmax	5000			min^{-1}
Maximum Torque (*)	Tmax	0.96			Nm
		9.8			kgfcm
Rotor Inertia	Jm	0.0000034			kgm^2
		0.0000347			$kgfcms^2$
Rotor Inertia (with Brake)	Jm	0.0000054			kgm^2
		0.0000551			$kgfcms^2$
Torque constant (*)	Kt	0.38			Nm/A (rms)
		3.9			kgfcm/A (rms)
Back EMF constant (1phase) (*)	Ke	13			V (rms)/1000 min^{-1}
	Kv	0.13			V (rms)sec/rad
Armature Resistance (1 phase) (*)	Ra	10			Ω
Mechanical time constant	tm	0.0007			s
Thermal time constant	tt	8			min
Static friction	Tf	0.02			Nm
		0.2			kgfcm
Weight	w	0.44			kg
Weight (with Brake)	w	0.66			kg
Maximum Current of Servo Amp.	Imax	4			A (peak)

(*) The values are the standard values at 20℃ and the tolerance is ±10%.
The speed-torque characteristics very depending on the type of software, parameter setting, and input voltage of the digital servo software. (The above figures show average values.)
These values may be changed without notice.

Model βO.4/5000is Specification A06B-0114-B□0□

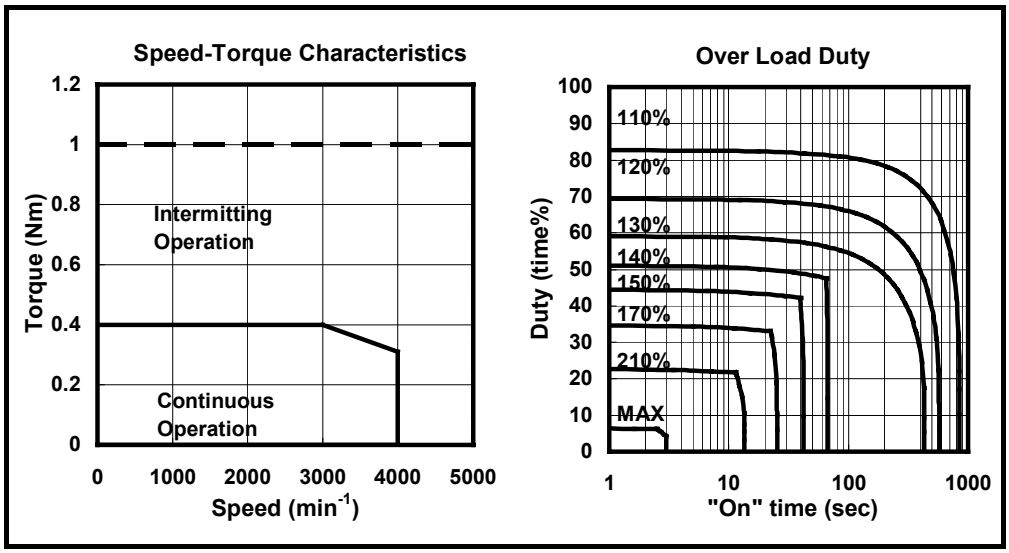

Data sheet

Parameter	Symbol	Value			Unit
Stall Torque (*)	Ts	0.4 4.1			Nm kgfcm
Stall Current (*)	Is	3.6			A (rms)
Rated Output (*)	Pr	0.13 0.17			kW HP
Rating Speed	Nr	4000			min^{-1}
Maximum Speed	Nmax	5000			min^{-1}
Maximum Torque (*)	Tmax	1 10			Nm kgfcm
Rotor Inertia	Jm	0.00001 0.000102			kgm^2 $kgfcms^2$
Rotor Inertia (with Brake)	Jm	0.000019 0.000194			kgm^2 $kgfcms^2$
Torque constant (*)	Kt	0.112 1.14			Nm/A (rms) kgfcm/A (rms)
Back EMF constant (1phase) (*)	Ke Kv	4.0 0.038			V (rms)/1000 min^{-1} V (rms)sec/rad
Armature Resistance (1 phase) (*)	Ra	0.55			Ω
Mechanical time constant	tm	0.001			s
Thermal time constant	tt	8			min
Static friction	Tf	0.04 0.4			Nm kgfcm
Weight	w	0.8			kg
Weight (with Brake)	w	1.2			kg
Maximum Current of Servo Amp.	Imax	20			A (peak)

(*) The values are the standard values at 20℃ and the tolerance is ±10%.
The speed-torque characteristics very depending on the type of software, parameter setting, and input voltage of the digital servo software. (The above figures show average values.)
These values may be changed without notice.

Model βO.5/5000is Specification A06B-0115-B□0□

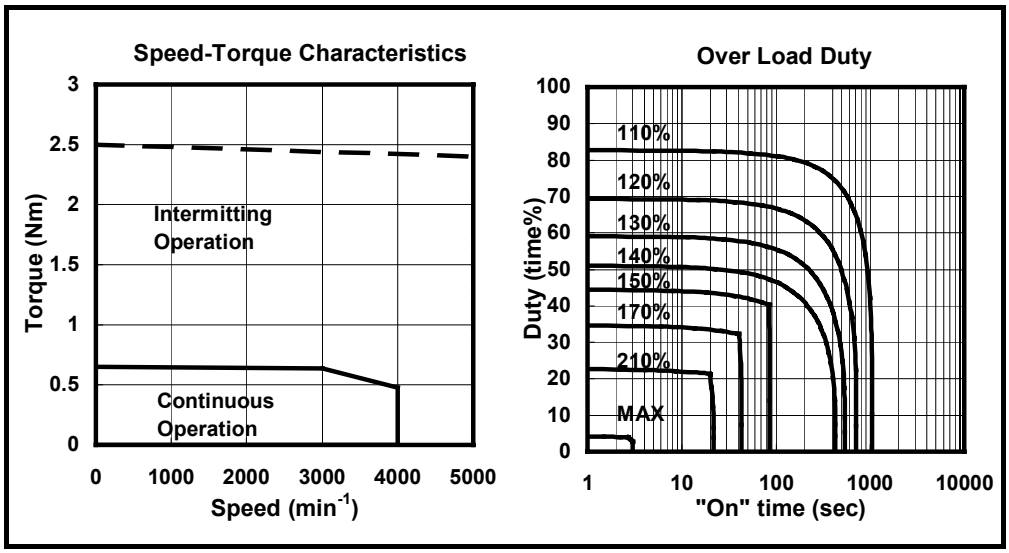

Data sheet

Parameter	Symbol	Value			Unit
Stall Torque (*)	Ts	0.65			Nm
		6.6			kgfcm
Stall Current (*)	Is	2.9			A (rms)
Rated Output (*)	Pr	0.2			kW
		0.27			HP
Rating Speed	Nr	4000			min^{-1}
Maximum Speed	Nmax	5000			min^{-1}
Maximum Torque (*)	Tmax	2.5			Nm
		26			kgfcm
Rotor Inertia	Jm	0.000018			kgm^2
		0.000184			$kgfcms^2$
Rotor Inertia (with Brake)	Jm	0.000027			kgm^2
		0.000276			$kgfcms^2$
Torque constant (*)	Kt	0.223			Nm/A (rms)
		2.28			kgfcm/A (rms)
Back EMF constant (1phase) (*)	Ke	7.7			V (rms)/1000 min^{-1}
	Kv	0.074			V (rms)sec/rad
Armature Resistance (1 phase) (*)	Ra	0.85			Ω
Mechanical time constant	tm	0.0009			s
Thermal time constant	tt	10			min
Static friction	Tf	0.04			Nm
		0.4			kgfcm
Weight	w	1			kg
Weight (with Brake)	w	1.4			kg
Maximum Current of Servo Amp.	Imax	20			A (peak)

(*) The values are the standard values at 20℃ and the tolerance is ±10%.
The speed-torque characteristics very depending on the type of software, parameter setting, and input voltage of the digital servo software. (The above figures show average values.)
These values may be changed without notice.

Model β**1/5000is** Specification A06B-0116-B□0□

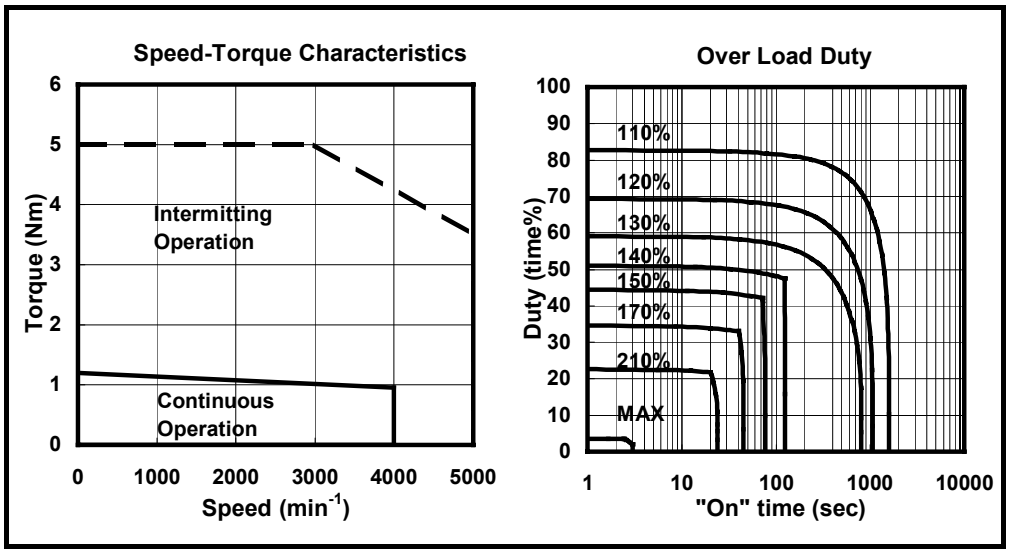

Data sheet

Parameter	Symbol	Value			Unit
Stall Torque (*)	Ts	1.2 12			Nm kgfcm
Stall Current (*)	Is	2.7			A (rms)
Rated Output (*)	Pr	0.4 0.54			kW HP
Rating Speed	Nr	4000			min^{-1}
Maximum Speed	Nmax	5000			min^{-1}
Maximum Torque (*)	Tmax	5 51			Nm kgfcm
Rotor Inertia	Jm	0.000034 0.000347			kgm^2 $kgfcms^2$
Rotor Inertia (with Brake)	Jm	0.000043 0.000439			kgm^2 $kgfcms^2$
Torque constant (*)	Kt	0.45 4.6			Nm/A (rms) kgfcm/A (rms)
Back EMF constant (1phase) (*)	Ke Kv	15.4 0.14			V (rms)/1000 min^{-1} V (rms)sec/rad
Armature Resistance (1 phase) (*)	Ra	1.5			Ω
Mechanical time constant	tm	0.0007			s
Thermal time constant	tt	15			min
Static friction	Tf	0.04 0.4			Nm kgfcm
Weight	w	1.5			kg
Weight (with Brake)	w	1.9			kg
Maximum Current of Servo Amp.	Imax	20			A (peak)

(*) The values are the standard values at 20℃ and the tolerance is ±10%.
The speed-torque characteristics very depending on the type of software, parameter setting, and input voltage of the digital servo software. (The above figures show average values.)
These values may be changed without notice.

Model β**2/4000is** Specification A06B-0061-B□0□

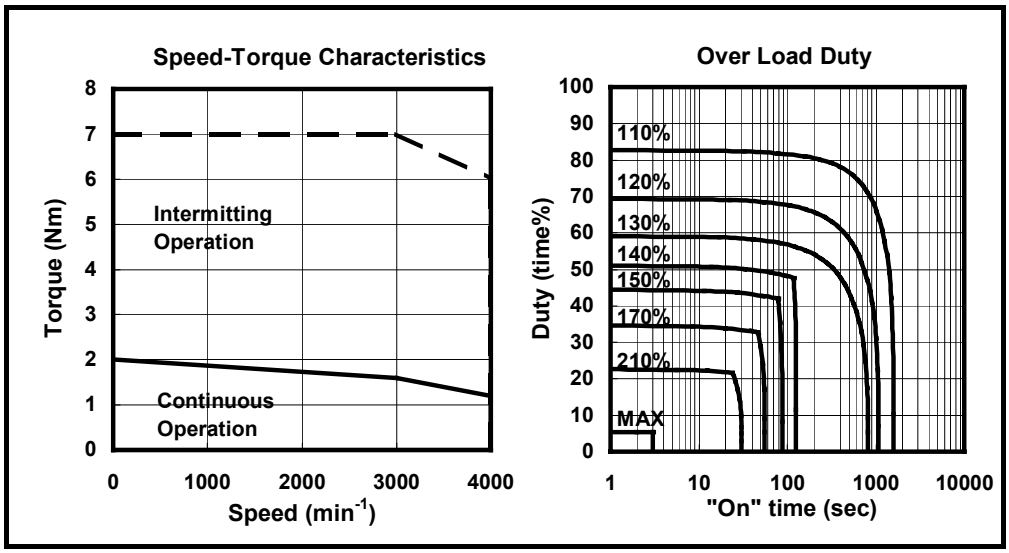

Data sheet

Parameter	Symbol	Value			Unit
Stall Torque (*)	Ts	2 20			Nm kgfcm
Stall Current (*)	Is	3.3			A (rms)
Rated Output (*)	Pr	0.5 0.67			kW HP
Rating Speed	Nr	4000			min^{-1}
Maximum Speed	Nmax	4000			min^{-1}
Maximum Torque (*)	Tmax	7 71			Nm kgfcm
Rotor Inertia	Jm	0.000291 0.00297			kgm^2 $kgfcms^2$
Rotor Inertia (with Brake)	Jm	0.000311 0.00317			kgm^2 $kgfcms^2$
Torque constant (*)	Kt	0.62 6.3			Nm/A (rms) kgfcm/A (rms)
Back EMF constant (1phase) (*)	Ke Kv	21 0.21			V (rms)/1000 min^{-1} V (rms)sec/rad
Armature Resistance (1 phase) (*)	Ra	1.6			Ω
Mechanical time constant	tm	0.004			s
Thermal time constant	tt	15			min
Static friction	Tf	0.1 1			Nm kgfcm
Weight	w	2.8			kg
Weight (with Brake)	w	3.8			kg
Maximum Current of Servo Amp.	Imax	20			A (peak)

(*) The values are the standard values at 20℃ and the tolerance is ±10%.
The speed-torque characteristics very depending on the type of software, parameter setting, and input voltage of the digital servo software. (The above figures show average values.)
These values may be changed without notice.

Model **βi4/4000is** Specification A06B-0063-B□0□

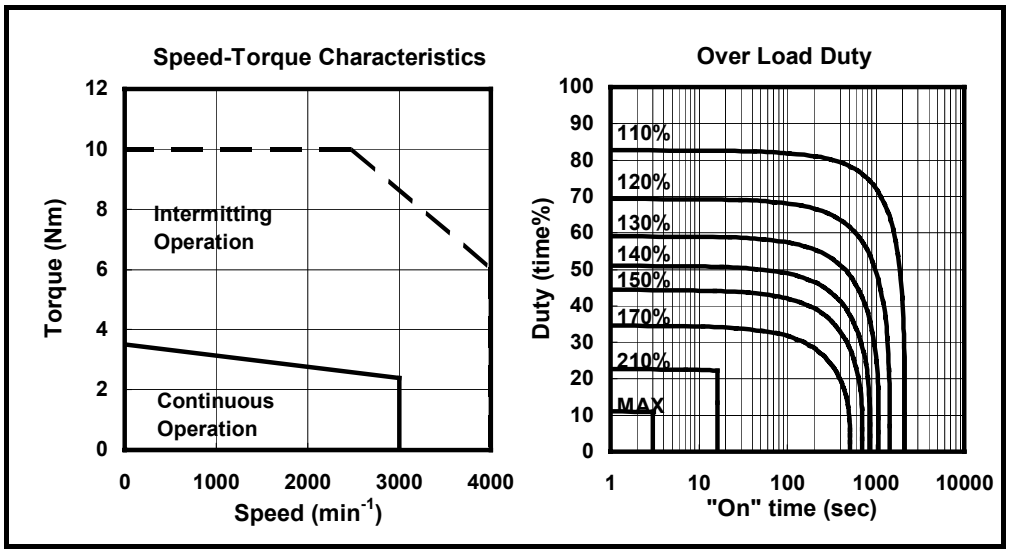

Data sheet

Parameter	Symbol	Value			Unit
Stall Torque (*)	Ts	3.5 36			Nm kgfcm
Stall Current (*)	Is	4.7			A (rms)
Rated Output (*)	Pr	0.75 1			kW HP
Rating Speed	Nr	3000			min^{-1}
Maximum Speed	Nmax	4000			min^{-1}
Maximum Torque (*)	Tmax	10 102			Nm kgfcm
Rotor Inertia	Jm	0.000515 0.00526			kgm^2 $kgfcms^2$
Rotor Inertia (with Brake)	Jm	0.000535 0.00546			kgm^2 $kgfcms^2$
Torque constant (*)	Kt	0.75 7.7			Nm/A (rms) kgfcm/A (rms)
Back EMF constant (1phase) (*)	Ke Kv	26 0.25			V (rms)/1000 min^{-1} V (rms)sec/rad
Armature Resistance (1 phase) (*)	Ra	0.94			Ω
Mechanical time constant	tm	0.003			s
Thermal time constant	tt	20			min
Static friction	Tf	0.2 2			Nm kgfcm
Weight	w	4.3			kg
Weight (with Brake)	w	5.3			kg
Maximum Current of Servo Amp.	Imax	20			A (peak)

(*) The values are the standard values at 20℃ and the tolerance is ±10%.
The speed-torque characteristics very depending on the type of software, parameter setting, and input voltage of the digital servo software. (The above figures show average values.)
These values may be changed without notice.

Model β**8/3000is** Specification A06B-0075-B□0□

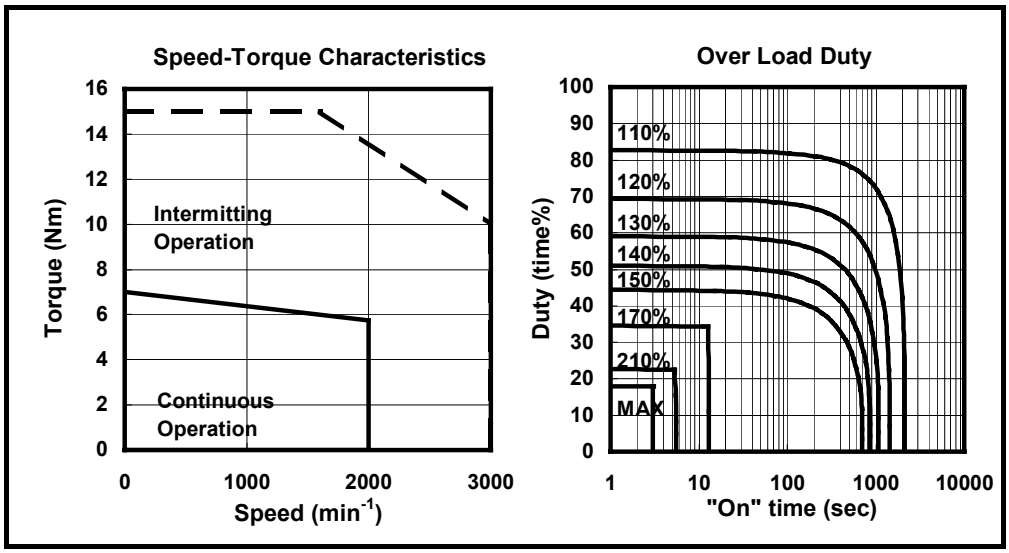

Data sheet

Parameter	Symbol	Value			Unit
Stall Torque (*)	Ts	7 71			Nm kgfcm
Stall Current (*)	Is	6			A (rms)
Rated Output (*)	Pr	1.2 1.6			kW HP
Rating Speed	Nr	2000			min^{-1}
Maximum Speed	Nmax	3000			min^{-1}
Maximum Torque (*)	Tmax	15 153			Nm kgfcm
Rotor Inertia	Jm	0.00117 0.0119			kgm^2 $kgfcms^2$
Rotor Inertia (with Brake)	Jm	0.00124 0.0127			kgm^2 $kgfcms^2$
Torque constant (*)	Kt	1.16 11.8			Nm/A (rms) kgfcm/A (rms)
Back EMF constant (1phase) (*)	Ke Kv	41 0.39			V (rms)/1000 min^{-1} V (rms)sec/rad
Armature Resistance (1 phase) (*)	Ra	1.00			Ω
Mechanical time constant	tm	0.003			s
Thermal time constant	tt	20			min
Static friction	Tf	0.3 3			Nm kgfcm
Weight	w	7.4			kg
Weight (with Brake)	w	9.6			kg
Maximum Current of Servo Amp.	Imax	20			A (peak)

(*) The values are the standard values at 20℃ and the tolerance is ±10%.
The speed-torque characteristics very depending on the type of software, parameter setting, and input voltage of the digital servo software. (The above figures show average values.)
These values may be changed without notice.

Model β**12/3000is** Specification A06B-0078-B□0□

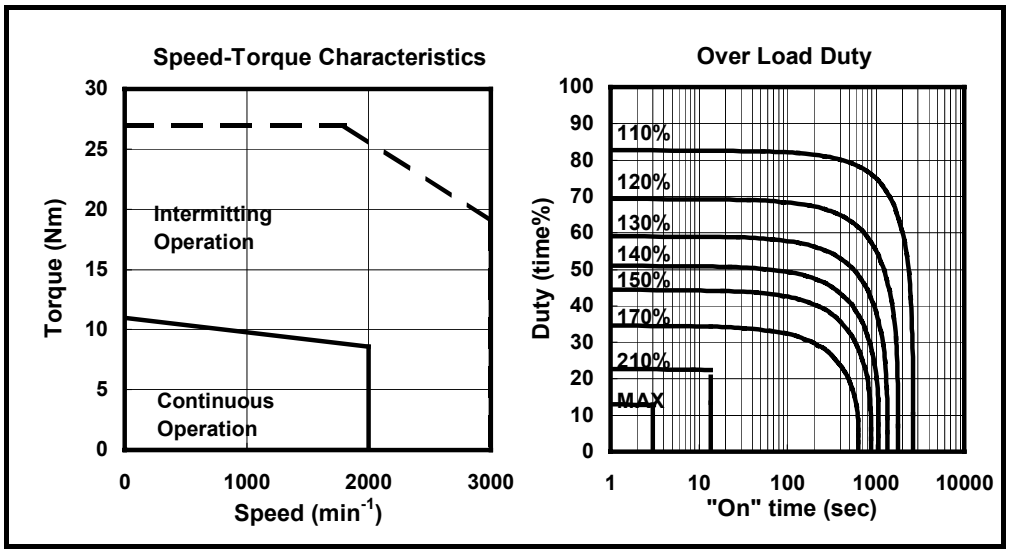

Data sheet

Parameter	Symbol	Value			Unit
Stall Torque (*)	Ts	11 112			Nm kgfcm
Stall Current (*)	Is	10.2			A (rms)
Rated Output (*)	Pr	1.8 2.4			kW HP
Rating Speed	Nr	2000			min^{-1}
Maximum Speed	Nmax	3000			min^{-1}
Maximum Torque (*)	Tmax	27 276			Nm kgfcm
Rotor Inertia	Jm	0.00228 0.0233			kgm^2 $kgfcms^2$
Rotor Inertia (with Brake)	Jm	0.00235 0.024			kgm^2 $kgfcms^2$
Torque constant (*)	Kt	1.08 11			Nm/A (rms) kgfcm/A (rms)
Back EMF constant (1phase) (*)	Ke Kv	38 0.36			V (rms)/1000 min^{-1} V (rms)sec/rad
Armature Resistance (1 phase) (*)	Ra	0.39			Ω
Mechanical time constant	tm	0.002			s
Thermal time constant	tt	25			min
Static friction	Tf	0.4 4			Nm kgfcm
Weight	w	11.9			kg
Weight (with Brake)	w	14.1			kg
Maximum Current of Servo Amp.	Imax	40			A (peak)

(*) The values are the standard values at 20℃ and the tolerance is ±10%.
The speed-torque characteristics very depending on the type of software, parameter setting, and input voltage of the digital servo software. (The above figures show average values.)
These values may be changed without notice.

Model β**22/2000is** Specification A06B-0085-B□0□

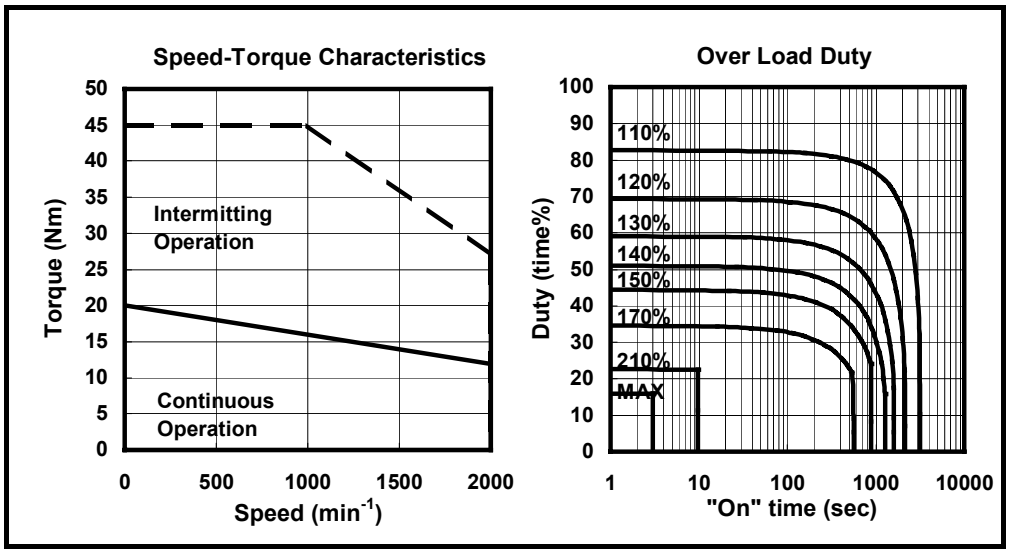

Data sheet

Parameter	Symbol	Value			Unit
Stall Torque (*)	Ts	20			Nm
		204			kgfcm
Stall Current (*)	Is	11.3			A (rms)
Rated Output (*)	Pr	2.5			kW
		3.4			HP
Rating Speed	Nr	2000			min^{-1}
Maximum Speed	Nmax	2000			min^{-1}
Maximum Torque (*)	Tmax	45			Nm
		459			kgfcm
Rotor Inertia	Jm	0.00527			kgm^2
		0.0538			$kgfcms^2$
Rotor Inertia (with Brake)	Jm	0.00587			kgm^2
		0.0599			$kgfcms^2$
Torque constant (*)	Kt	1.77			Nm/A (rms)
		18.1			kgfcm/A (rms)
Back EMF constant (1phase) (*)	Ke	62			V (rms)/1000 min^{-1}
	Kv	0.59			V (rms)sec/rad
Armature Resistance (1 phase) (*)	Ra	0.44			Ω
Mechanical time constant	tm	0.002			s
Thermal time constant	tt	30			min
Static friction	Tf	0.8			Nm
		8			kgfcm
Weight	w	17			kg
Weight (with Brake)	w	23			kg
Maximum Current of Servo Amp.	Imax	40			A (peak)

(*) The values are the standard values at 20℃ and the tolerance is ±10%.
The speed-torque characteristics very depending on the type of software, parameter setting, and input voltage of the digital servo software. (The above figures show average values.)
These values may be changed without notice.

3 OUTLINE DRAWINGS

This chapter describes the outline drawings of FANUC AC servo motor β*i*s series. The drawings are follows.

Model	Fig. No.
Models β0.2*i*S and β0.3*i*S	Fig. 3(a)
Models β0.2*i*S and β0.3*i*S (with brake)	Fig. 3(b)
Models β0.2*i*S and β0.3*i*S (shaft option)	Fig. 3(c)
Models β0.4*i*S, β0.5*i*S, and β1*i*S	Fig. 3(d)
Models β0.4*i*S, β0.5*i*S, and β1*i*S (with brake)	Fig. 3(e)
Models β0.4*i*S and β0.5*i*S (shaft option)	Fig. 3(f)
Model β1*i*S (shaft option)	Fig. 3(g)
Models β0.4*i*S, β0.5*i*S, and β1*i*S (engaged with the connector) (elbow type)	Fig. 3(h)
Models β0.4*i*S, β0.5*i*S, and β1*i*S (engaged with the connector) (straight type)	Fig. 3(i)
Models β2*i*S and β4*i*S	Fig. 3(j)
Models β2*i*S and β4*i*S (with brake)	Fig. 3(k)
Model β2*i*S (shaft option)	Fig. 3(l)
Model β4*i*S (shaft option)	Fig. 3(m)
Models β8*i*S and β12*i*S	Fig. 3(n)
Models β8*i*S and β12*i*S (with brake)	Fig. 3(o)
Model β8*i*S (shaft option)	Fig. 3(p)
Model β12*i*S (shaft option)	Fig. 3(q)
Model β22*i*S	Fig. 3(r)
Model β22*i*S (with brake)	Fig. 3(s)
Model β22*i*S (shaft option)	Fig. 3(t)

Fig. 3(a) Models β0.2*is* and β0.3*is*

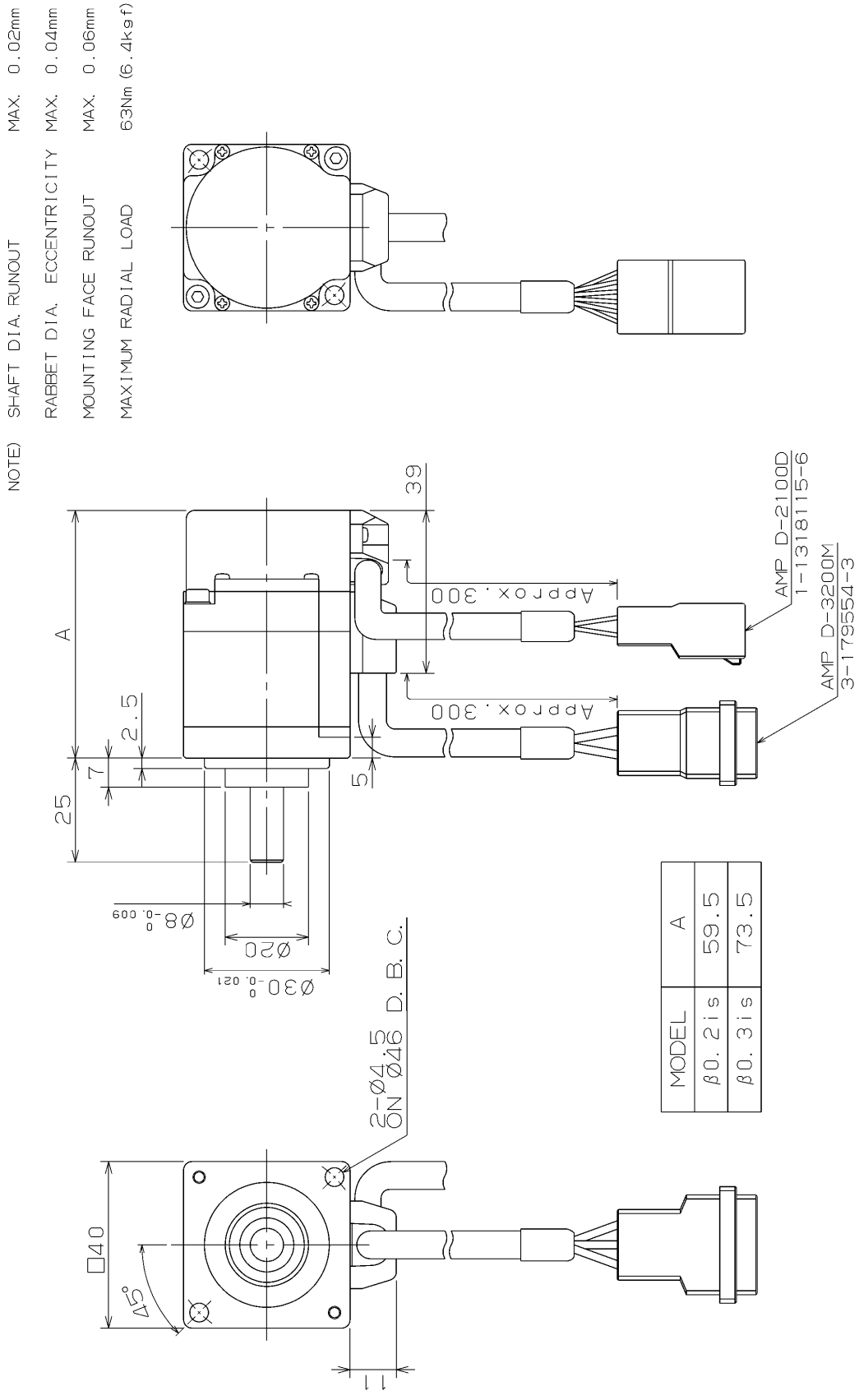

Fig. 3(b) Models β0.2*is* and β0.3*is* (with brake)

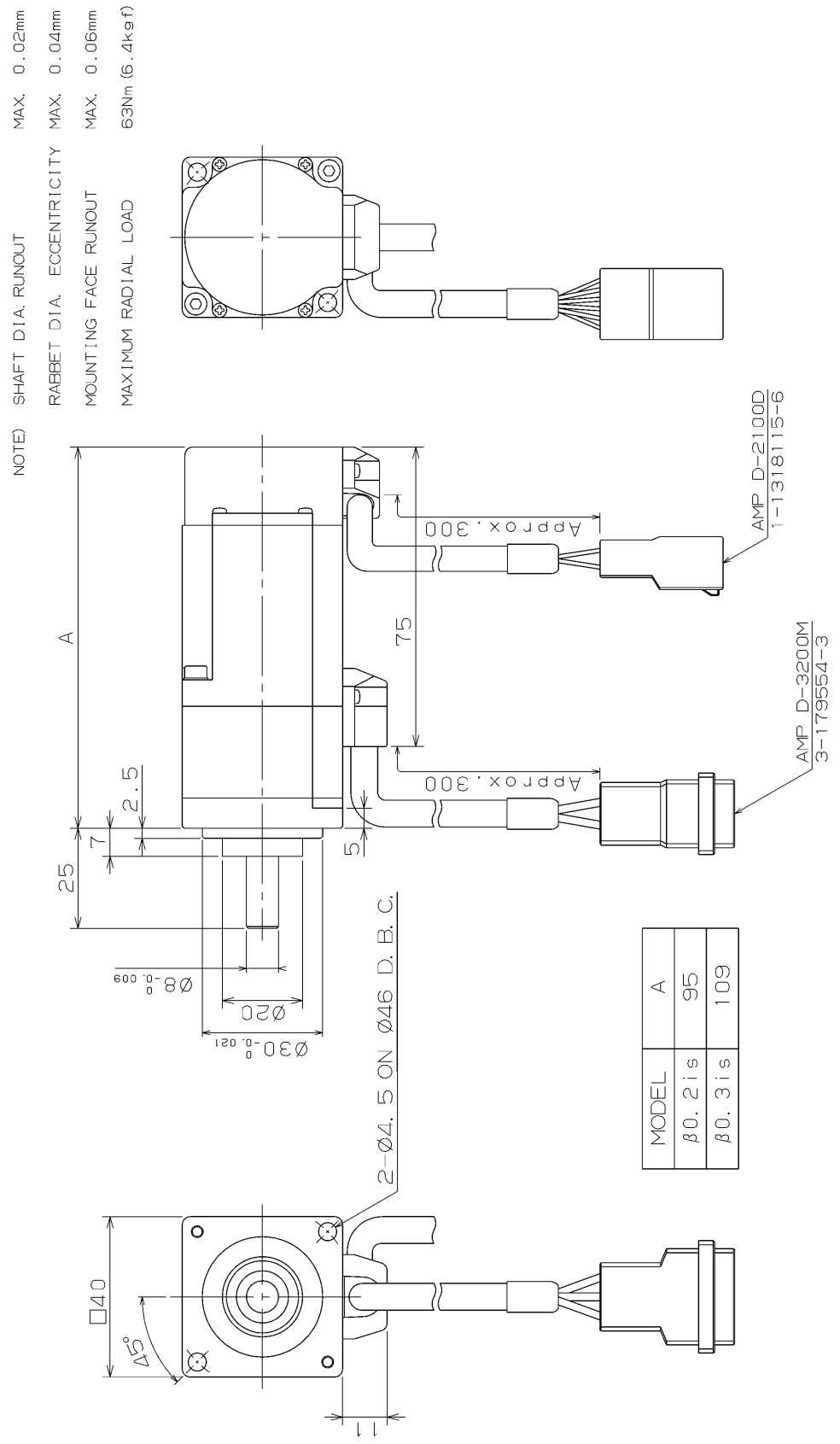

Fig. 3(c) Models β0.2*is* and β0.3*is* (shaft option)

STANDARD:
STRAIGHT SHAFT
A06B-011□-B103
-B403

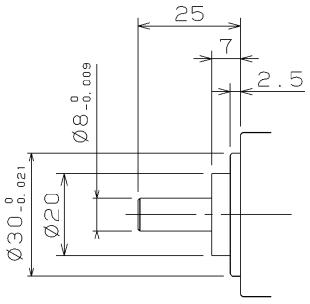

OPTION:
STRAIGHT SHAFT
WITH KEYWAY
A06B-011□-B203
-B503

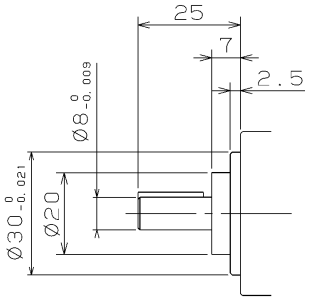

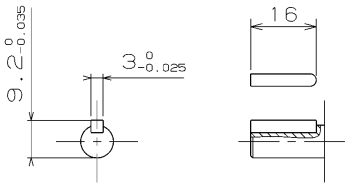

Fig. 3(d) Models β0.4*is*, β0.5*is*, and β1*is*

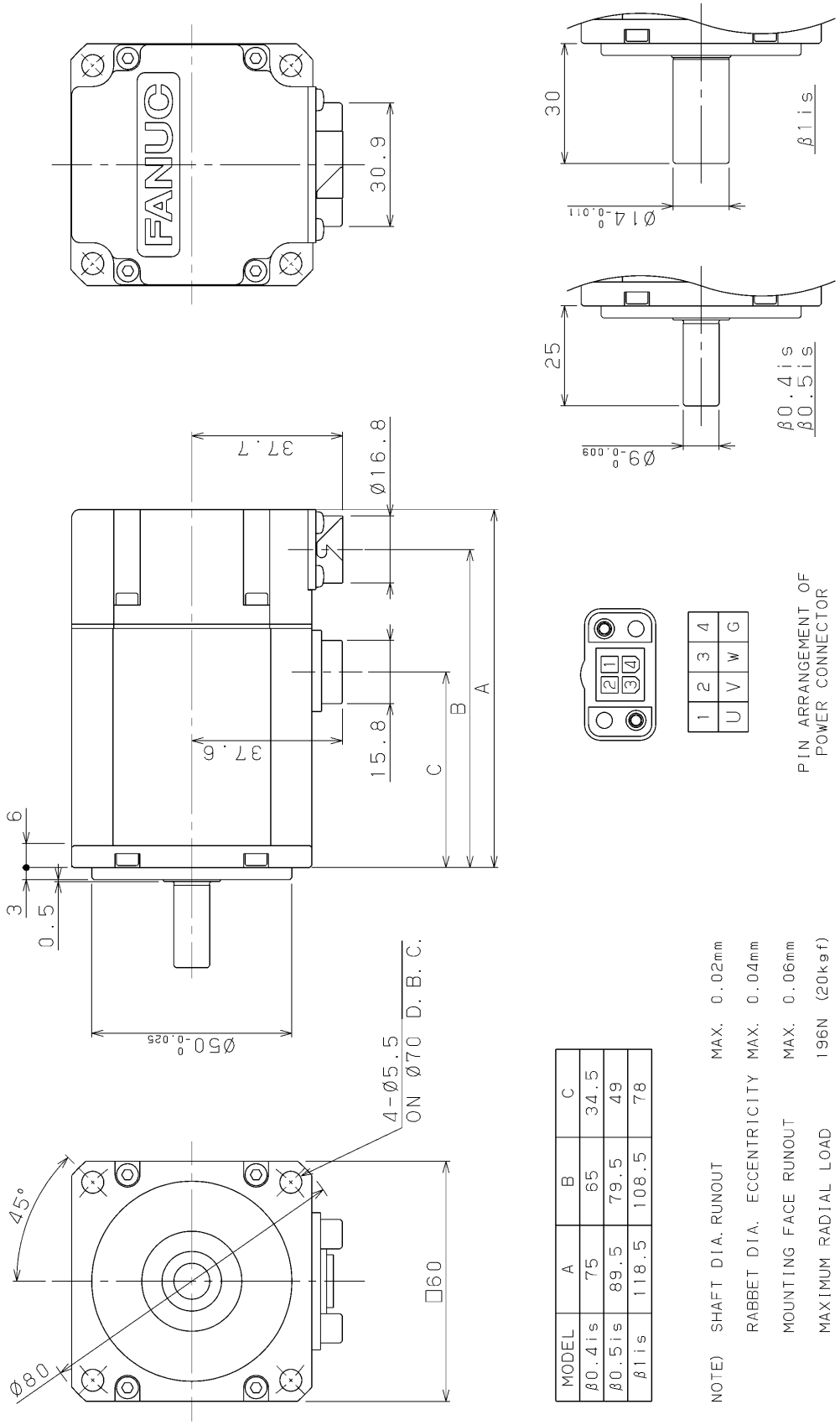

MODEL	A	B	C
β0.4is	75	65	34.5
β0.5is	89.5	79.5	49
β1is	118.5	108.5	78

Fig. 3(e) Models β0.4*is*, β0.5*is*, and β1*is* (with brake)

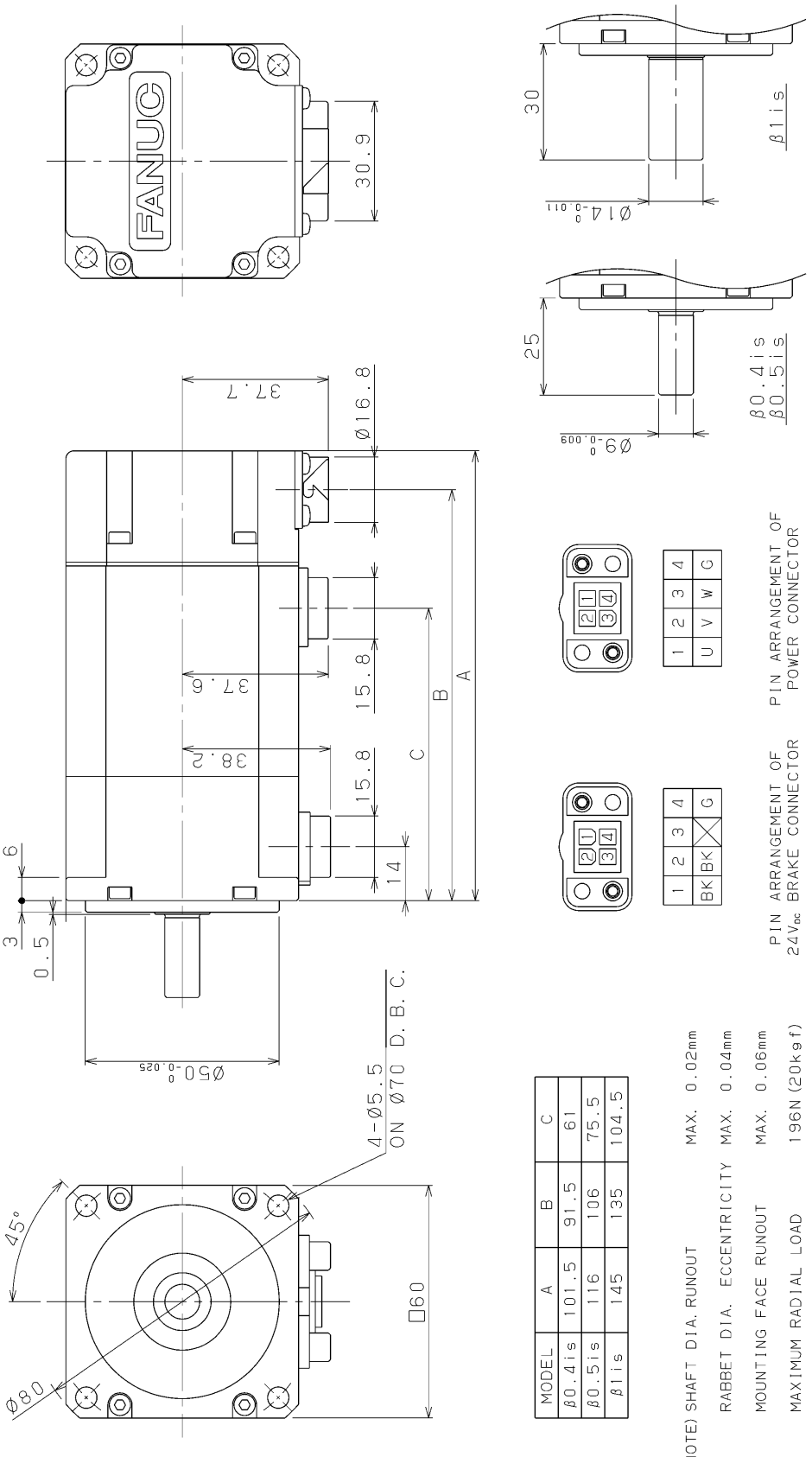

MODEL	A	B	C
β0.4is	101.5	91.5	61
β0.5is	116	106	75.5
β1is	145	135	104.5

Fig. 3(f) Models β0.4*is* and β0.5*is* (shaft option)

STANDARD:
STRAIGHT SHAFT
A06B-011□-B103
B403

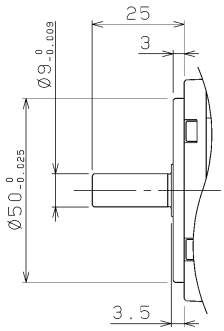

OPTION:
STRAIGHT SHAFT
WITH KEYWAY
A06B-011□-B203
B503

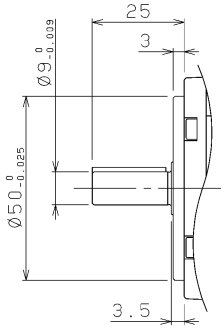

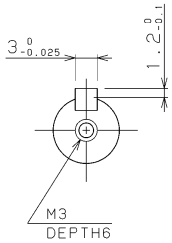

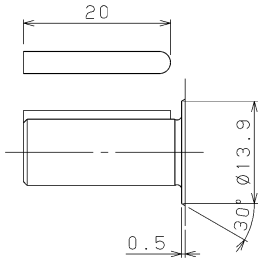

Fig. 3(g) Model β1*i*s (shaft option)

STANDARD:
STRAIGHT SHAFT
A06B-0116-B103
B403

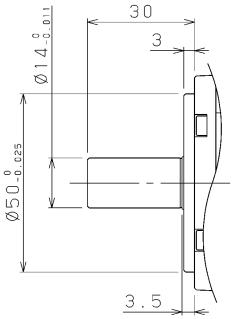

OPTION:
STRAIGHT SHAFT
WITH KEYWAY
A06B-0116-B203
B503

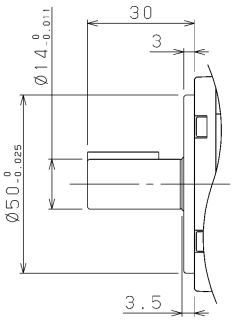

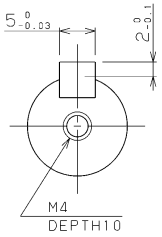

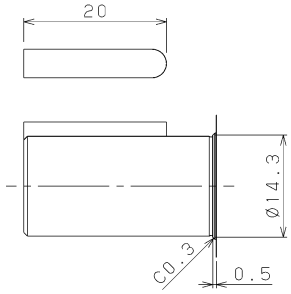

Fig. 3(h) Models β0.4*is*, β0.5*is*, and β1*is* (engaged with the connector) (elbow type)

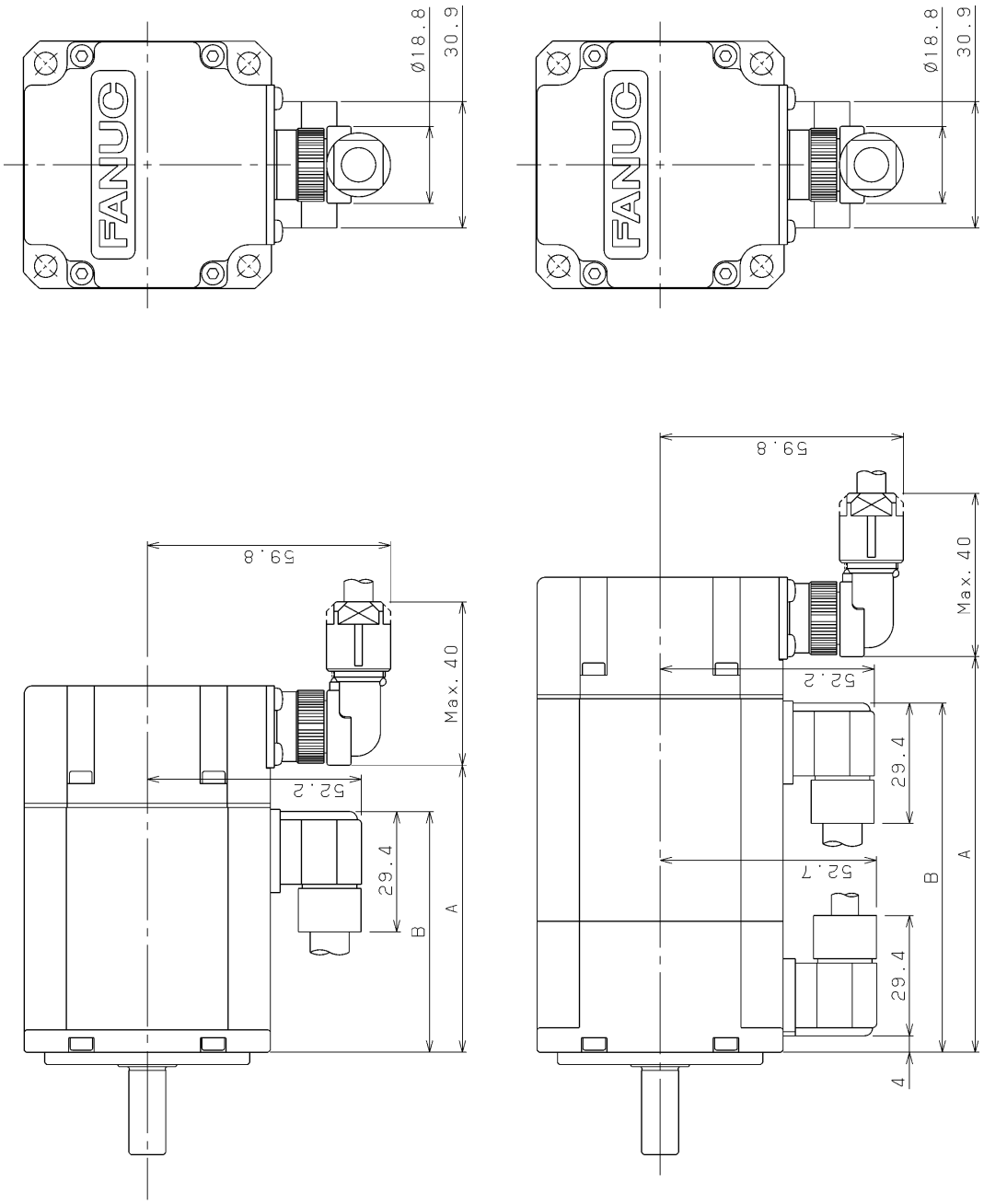

STANDARD

MODEL	A	B
β0.4is	55.6	44.3
β0.5is	70.1	58.8
β1is	99.1	87.8

WITH BRAKE

MODEL	A	B
β0.4is	82.1	70.8
β0.5is	96.6	85.3
β1is	125.6	114.3

Fig. 3(i) Models β0.4*i*s, β0.5*i*s, and β1*i*s (engaged with the connector) (straight type)

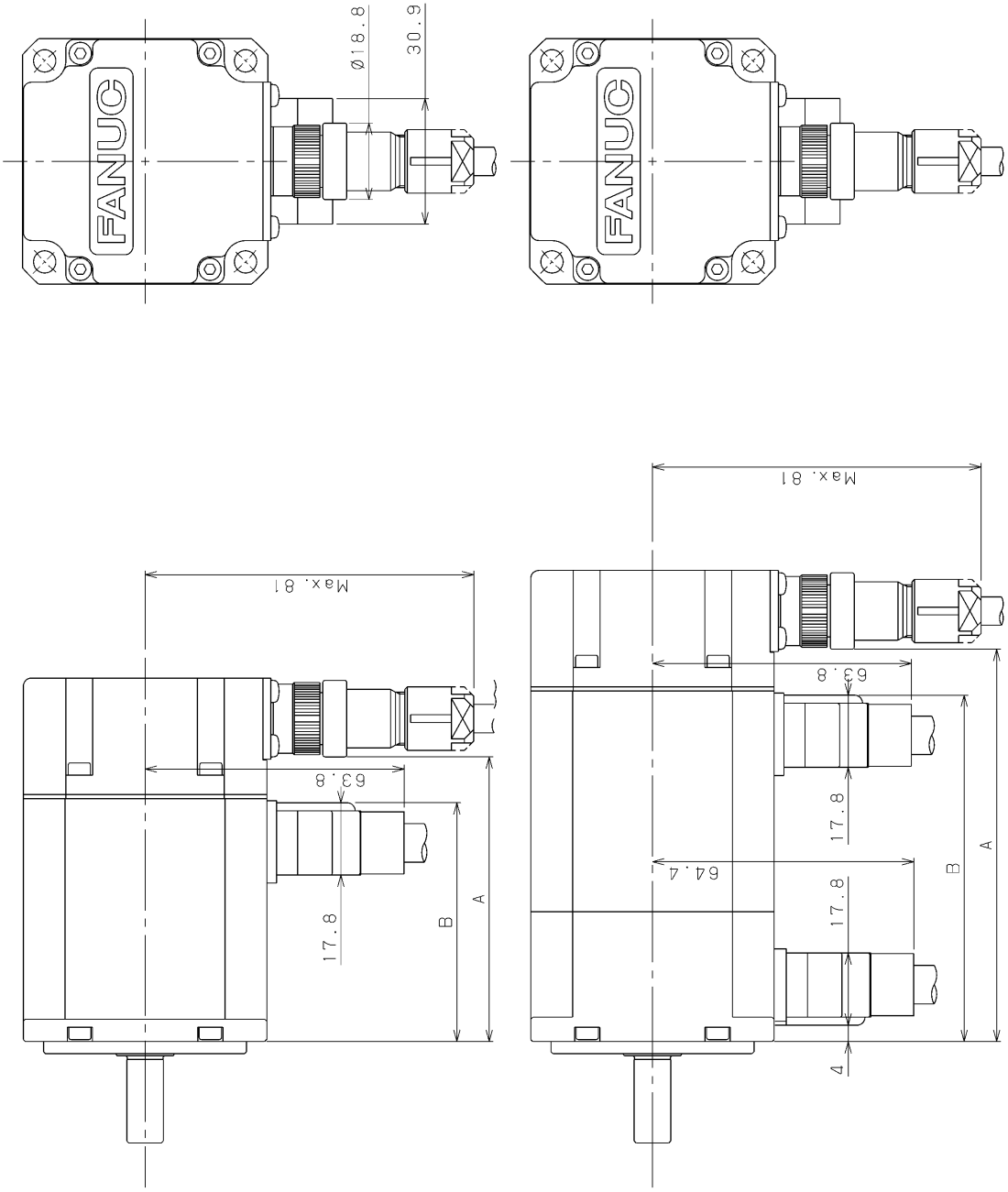

STANDARD

MODEL	A	B
β0.4is	55.6	44.3
β0.5is	70.1	58.8
β1is	99.1	87.8

WITH BRAKE

MODEL	A	B
β0.4is	82.1	70.8
β0.5is	96.6	85.3
β1is	125.6	114.3

Fig. 3(j) Models β2*is* and β4*is*

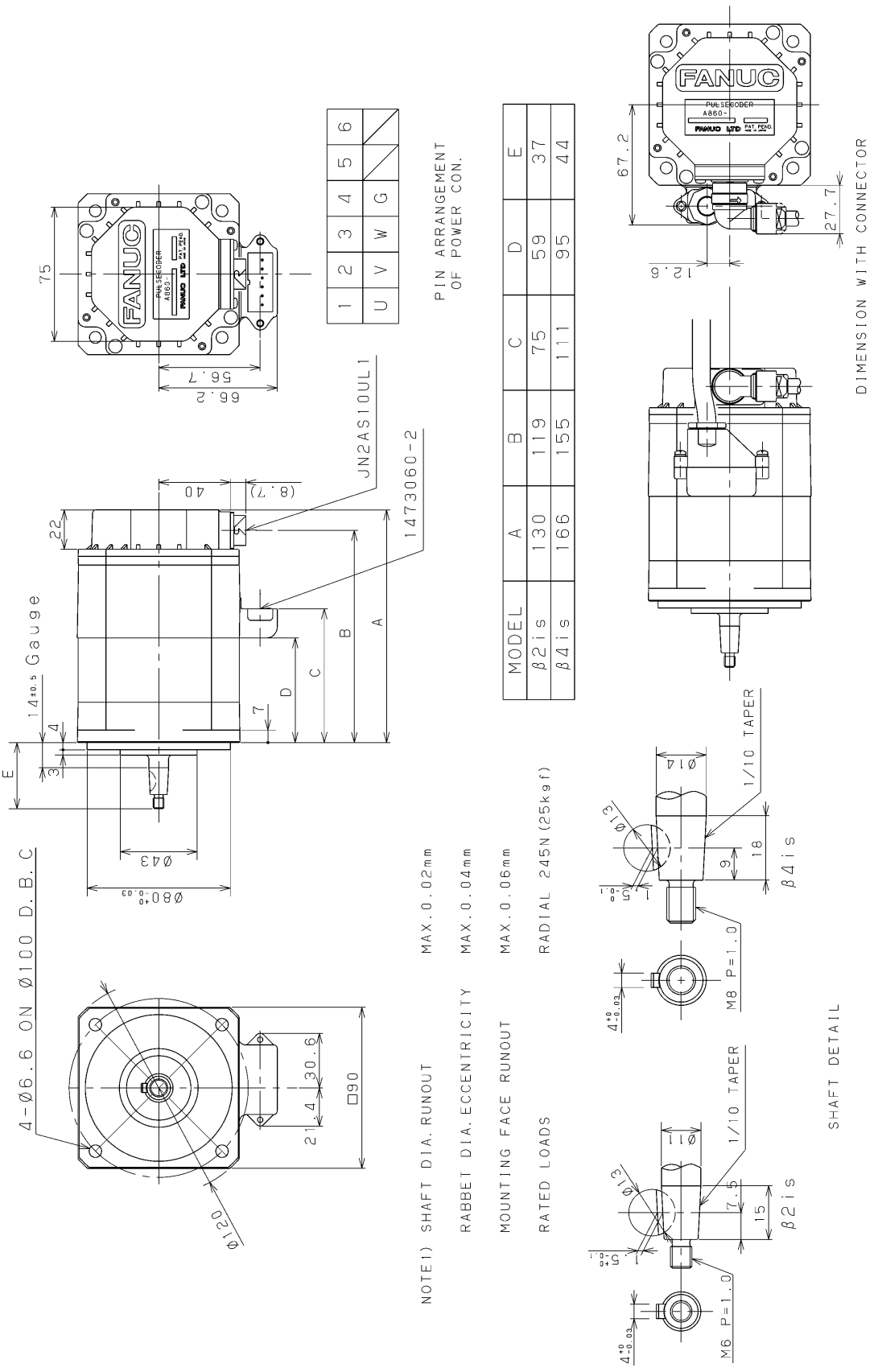

Fig. 3(k) Models β2*i*s and β4*i*s (with brake)

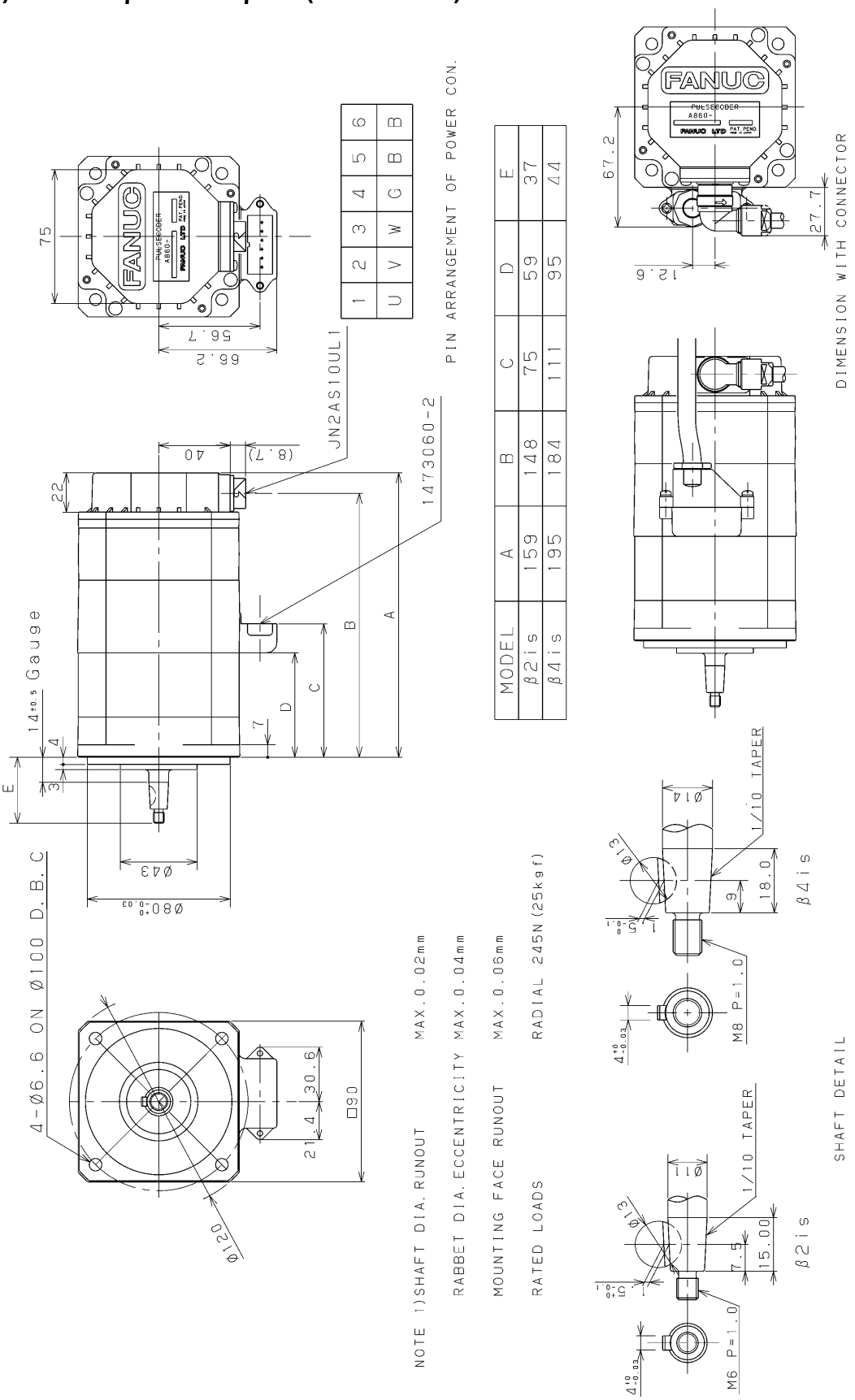

MODEL	A	B	C	D	E
β2is	159	148	75	59	37
β4is	195	184	111	95	44

Fig. 3(l) Model β2*is* (shaft option)

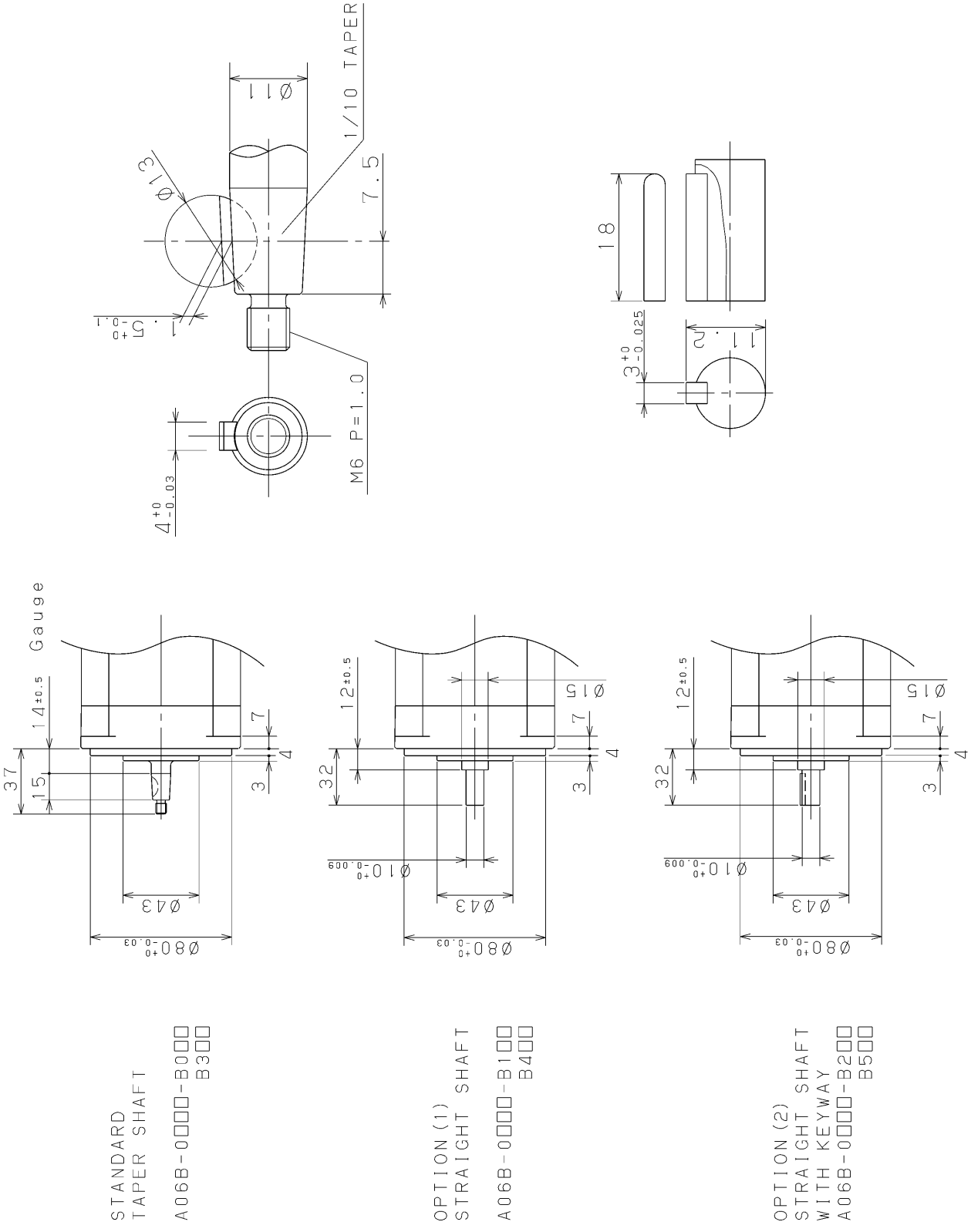

Fig. 3(m) Model β4*is* (shaft option)

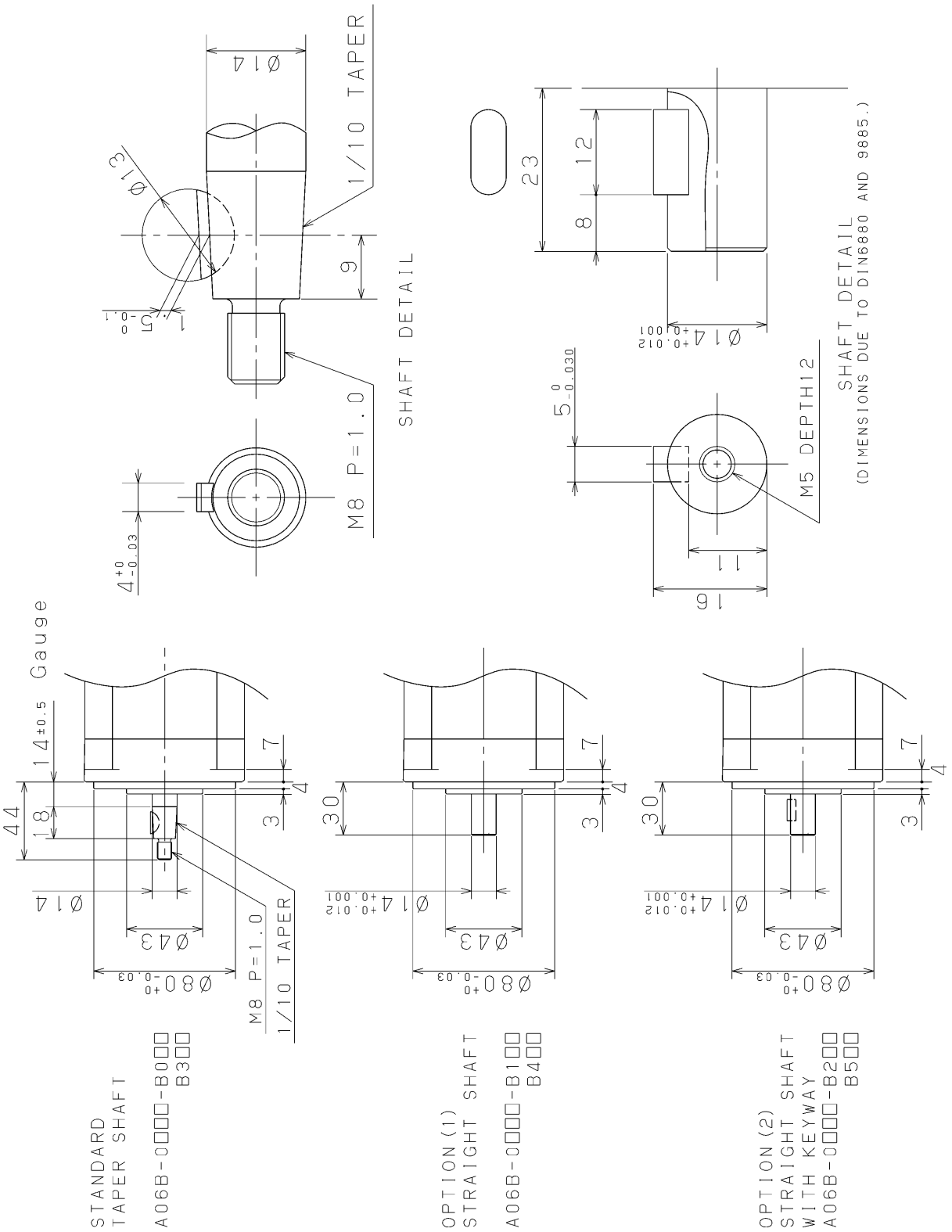

Fig. 3(n) Models β8*is* and β12*is*

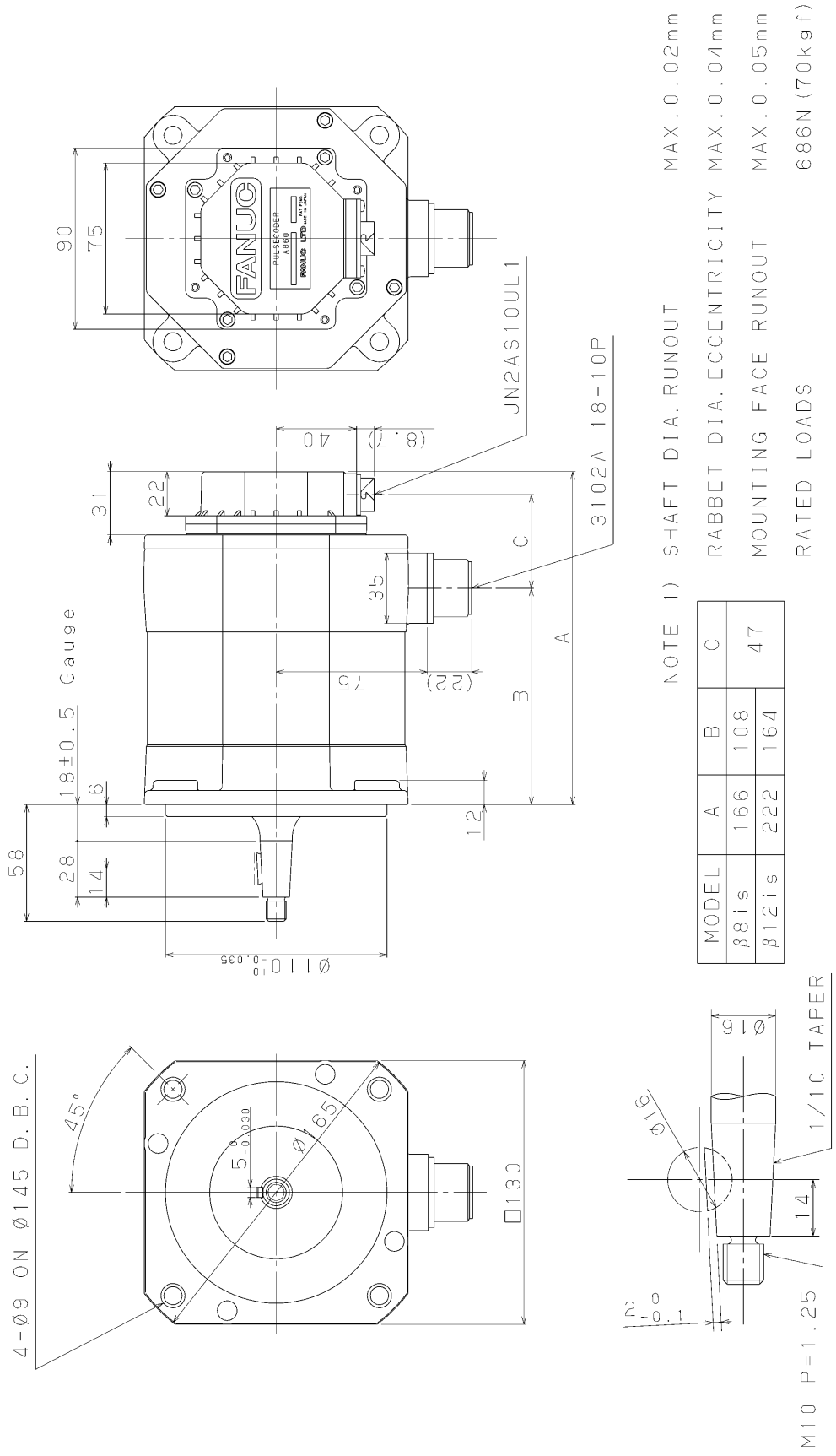

MODEL	A	B	C
β8is	166	108	47
β12is	222	164	

Fig. 3(o) Models β8*is* and β12*is* (with brake)

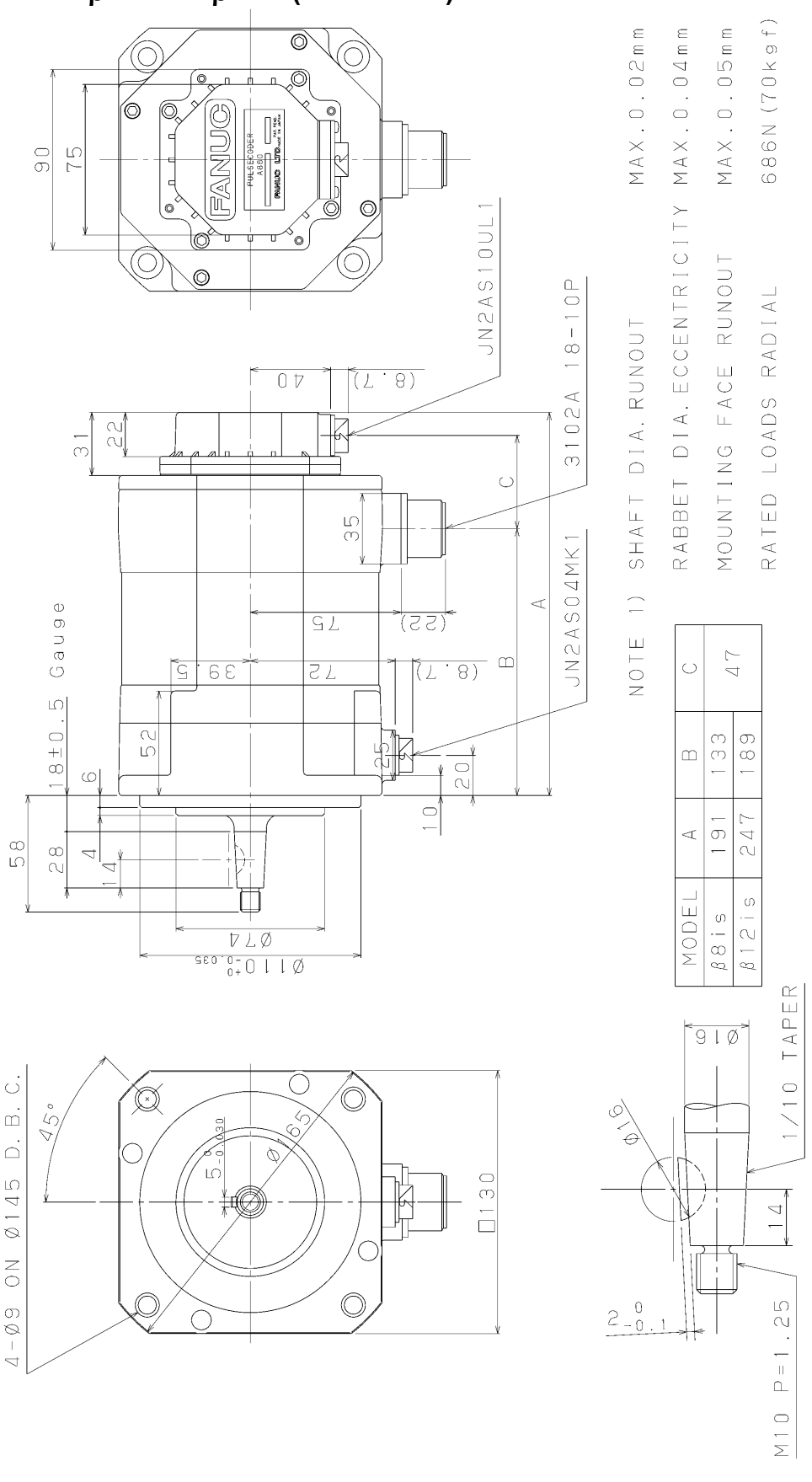

Fig. 3(p) Model β8*is* (shaft option)

Fig. 3(q) Model β12*is* (shaft option)

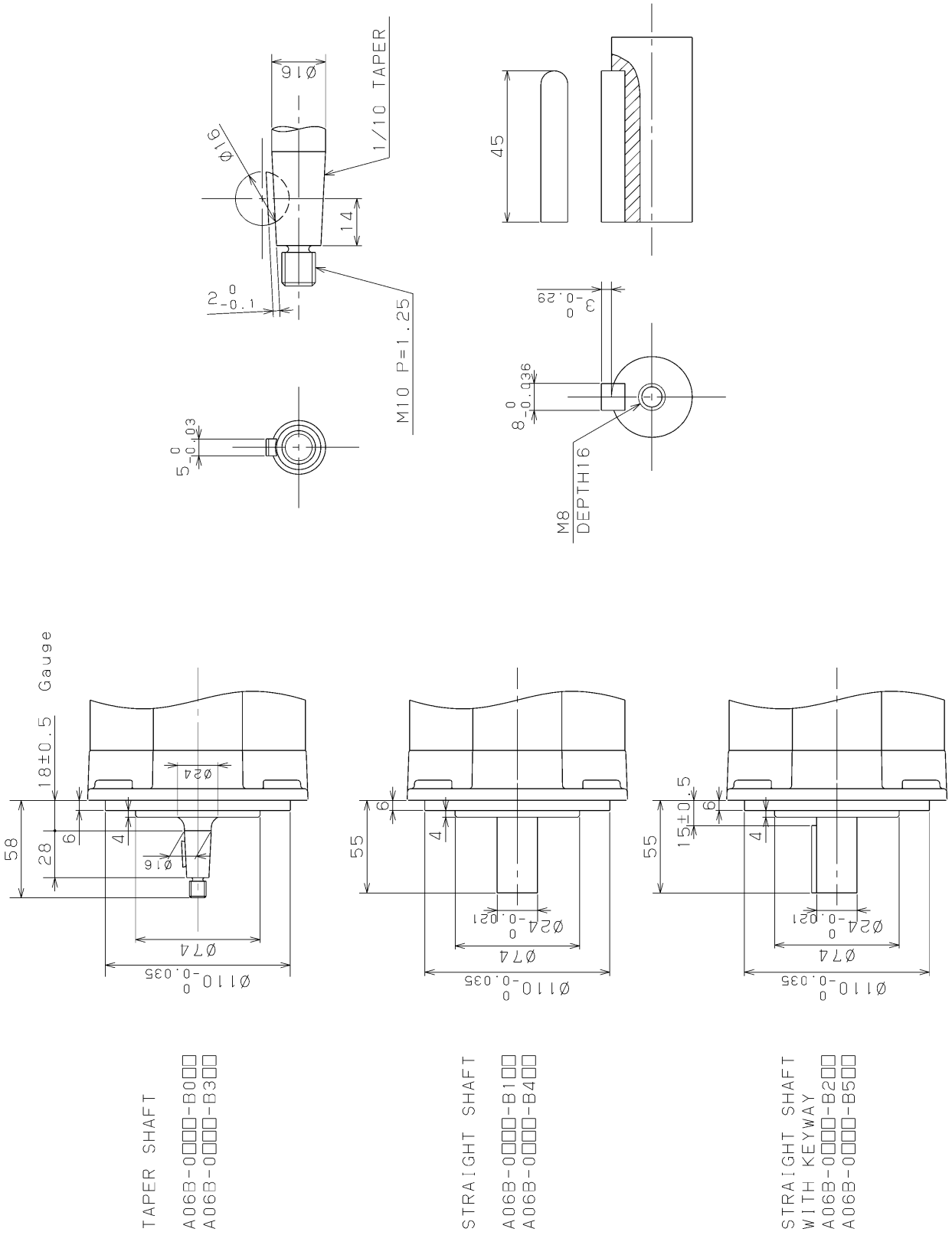

Fig. 3(r) Model β22*is*

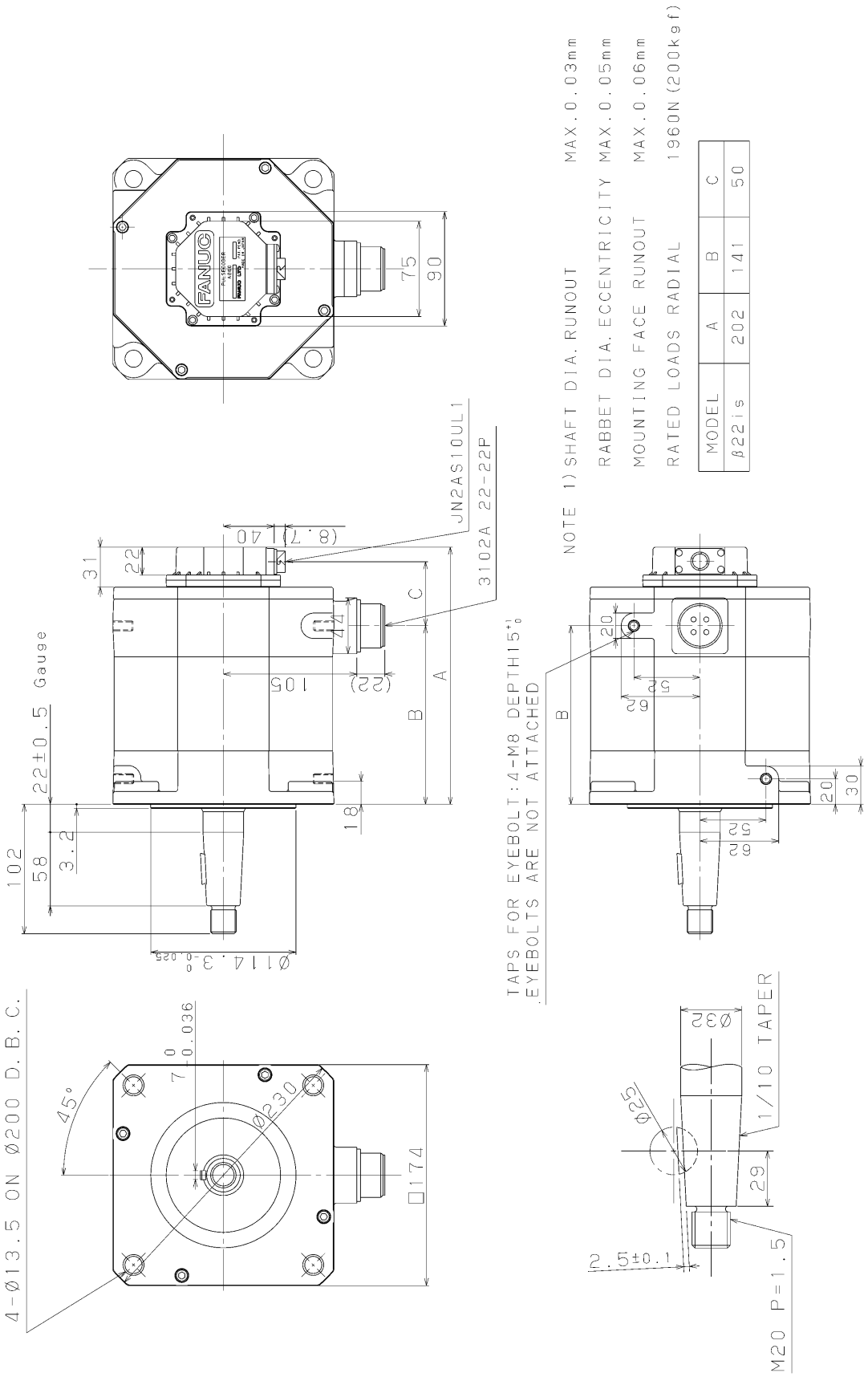

Fig. 3(s) Model β22*i*s (with brake)

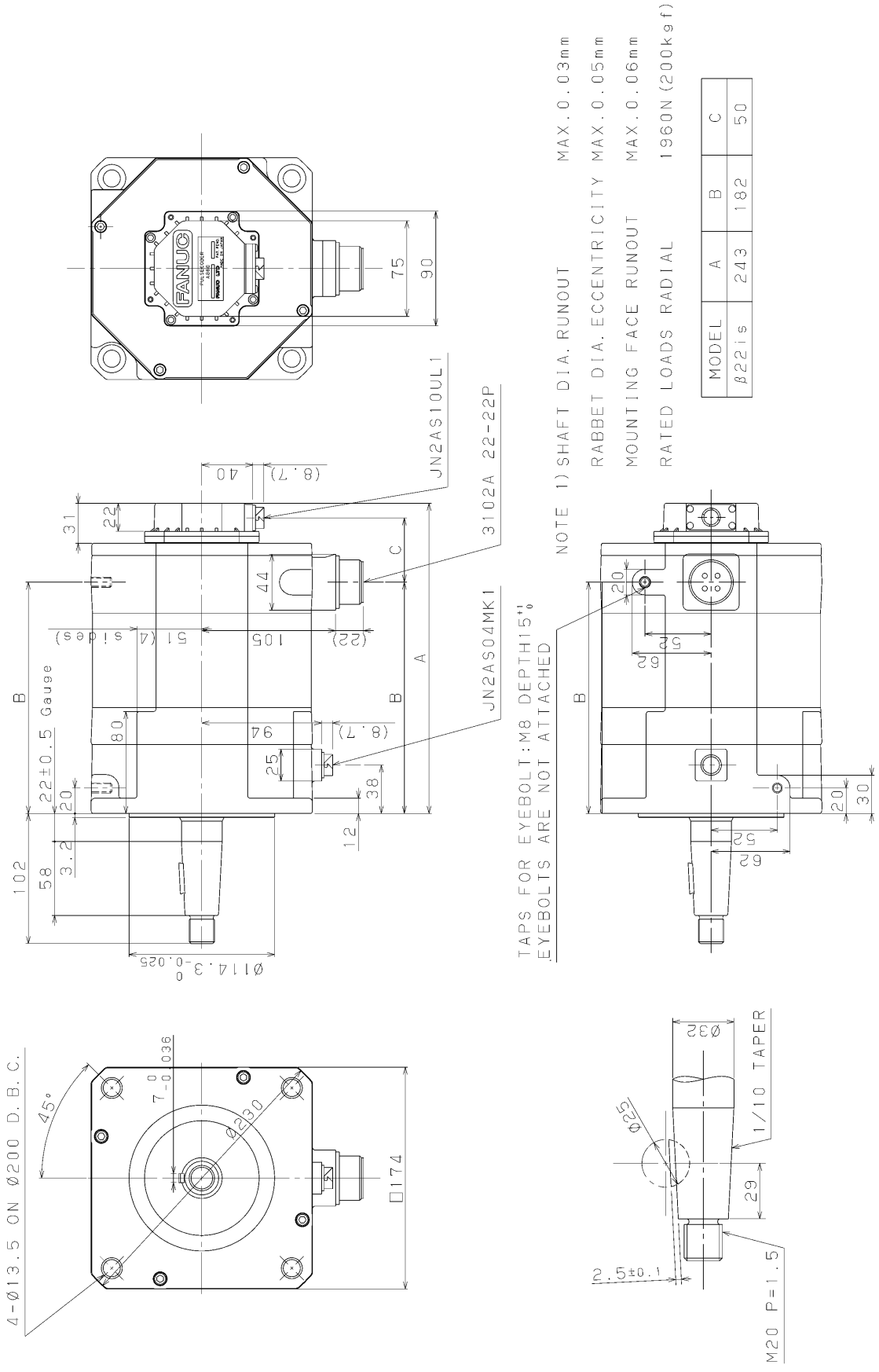

Fig. 3(t) Model β22*is* (shaft option)

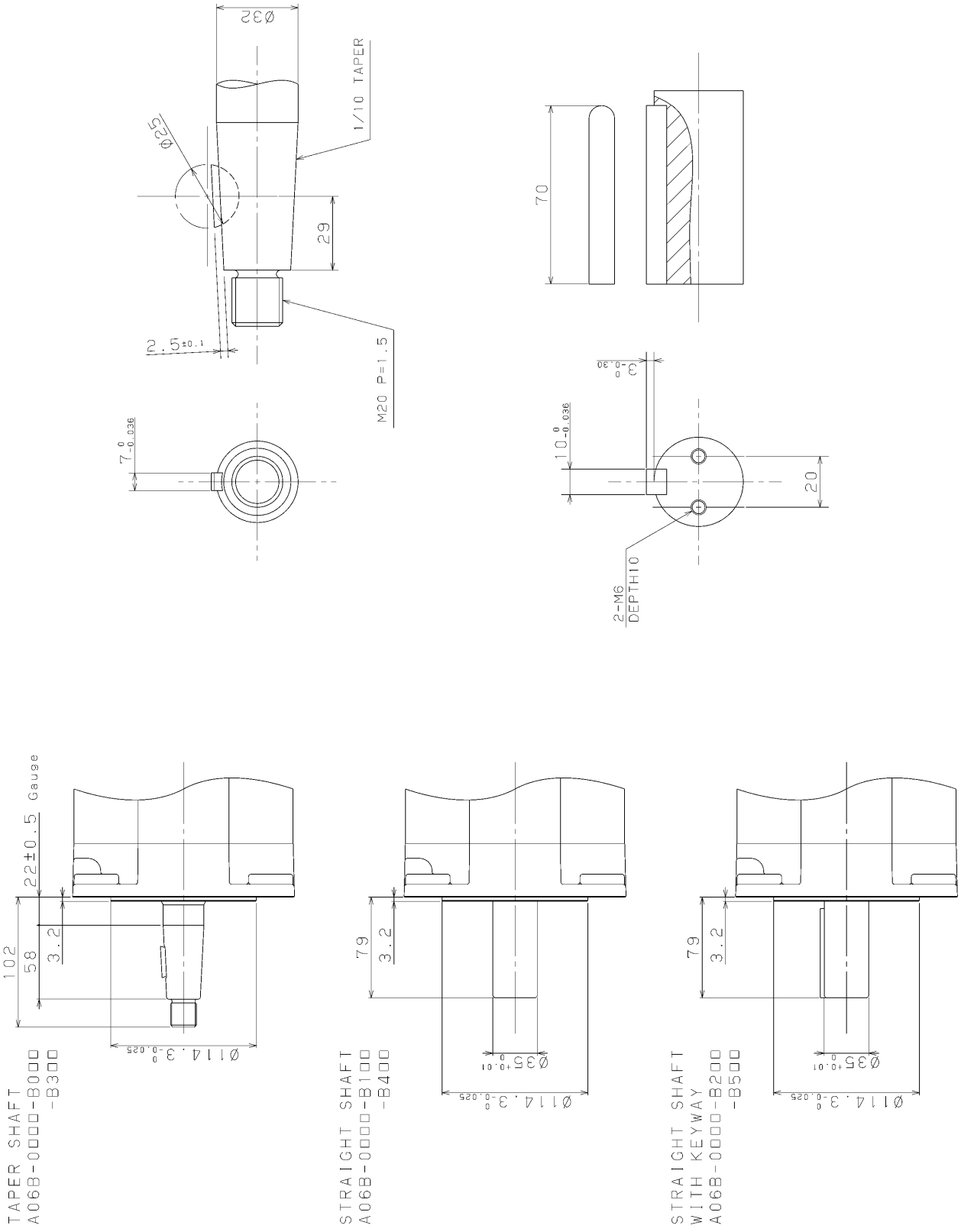

4 CONNECTION OF POWER LINE

This chapter describes the connecting table of the motor side of the motor power line. Other connectiong table for using the motor, refer to "I-2.2.2 Connection of servo motor".

Models β0.2/5000*i*s and β0.3/5000*i*s

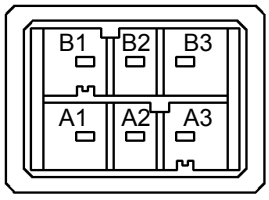

3-179554-3

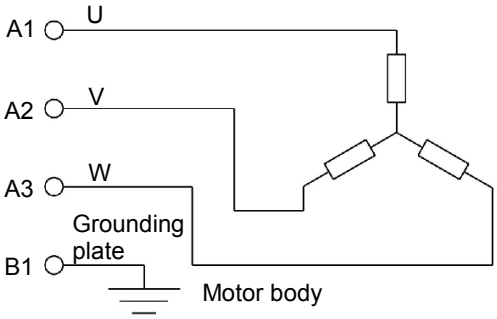

Models β0.4/5000*i*s, β0.5/5000*i*s, and β1/5000*i*s

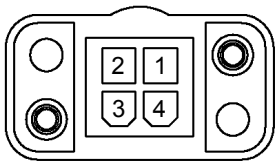

55618-0401

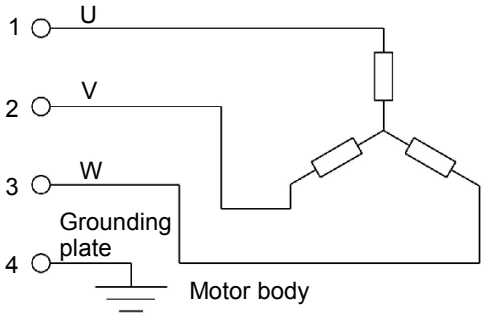

Models β2/4000*i*s and β4/4000*i*s

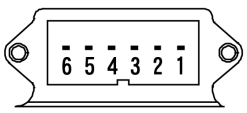

Layout of connector pins on the motor side

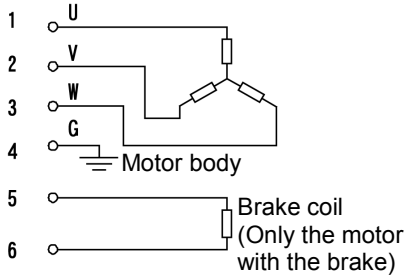

NOTE
No surge absorber for brake is contained in the motor.
Prepare a surge absorber in the power magnetics cabinet.

Models β8/3000*i*s and β12/3000*i*s

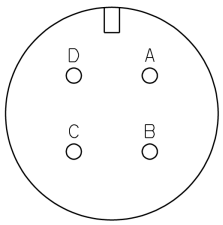

3102A-18-10P

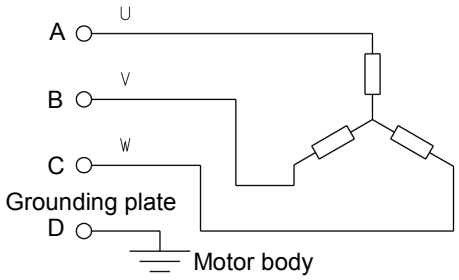

Model β22/2000*i*s

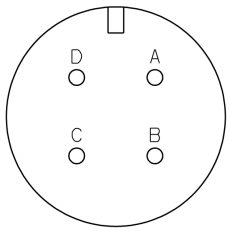

3102A 22-22P

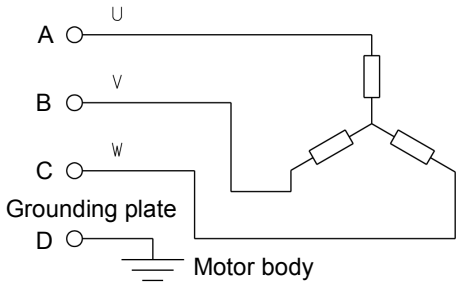

> ⚠ **WARNING**
> When attaching the power leads and jumpers to the terminal block, follow the procedure described in this section to make connections with specified torque. Driving a motor with a terminal loosened could result in the terminal block overheating and causing a fire. The connectors of the β0.2*i*s and β0.3*i*s are not waterproofed, so the machine tool builder need to take action for them. In addition, a detached terminal may cause a ground fault, short circuit, or electric shock.

INDEX

<A>

Absolute-type Pulsecoder 92
Allowable Axis Load for a Servo Motor..... 32
Ambient Environment 7
Applicable Amplifiers..... 12
APPROVED SPECIFICATIONS..... 83
Axis Run-out Precision of a Servo Motor 33

<B>

BRAKE SPECIFICATIONS 98
BUILT-IN BRAKE..... 97

<C>

Calculating acceleration torque 52
Calculating the Acceleration Torque 52
Calculating the Dynamic Brake Stop Distance..... 61
Calculating the load inertia..... 48
Calculating the Load Torque 45
Calculating the Motor Speed 47
Calculating the Percentage Duty Cycle and ON Time with the Maximum Cutting Torque 59
Calculating the Root-mean-square Value of the Torques 57
Calculating the torque required by the motor shaft in acceleration..... 55
CAUTIONS 103
Cautions in Mounting a Servo Motor 37
Cautions in Using a Separate Type Pulsecoder 96
CHARACTERISTIC CURVE AND DATA SHEET 75
CHARACTERISTIC CURVE AND DATA SHEET ... 112
Checking a Delivered Servo Motor and Storing a Servo Motor..... 10
COMMON SPECIFICATIONS 110
CONDITIONS FOR APPROVAL RELATED TO THE IEC60034 STANDARD..... 81
CONDITIONS FOR SELECTING A SERVO MOTOR 41
CONNECTING A BRAKE 99
Connecting a Pulsecoder 91
Connecting a Separate Type Pulsecoder..... 94
CONNECTING A SERVO MOTOR 12
CONNECTION OF POWER LINE 144
Connection of the Brakes..... 101
Connection to a conduit hose 27
Connections Related to a Servo Motor..... 13
Connector 15
Connectors on the cable side (for brake : models β8*i*s to β22*i*s) 26
Connectors on the cable side (for power : models β8*i*s to β22*i*s) 23
Connectors on the cable side (for power and brake : models β0.2*i*s and β0.3*i*s) 20
Connectors on the cable side (for power and brake : models β0.4*i*s to β1*i*s)..... 21
Connectors on the cable side (for power and brake : models β2*i*s and β4*i*s) 22
Connectors on the cable side (for signal : models β0.2*i*s and β0.3*i*s) 17
Connectors on the cable side (for signal : models β0.4*i*s to β22*i*s)..... 18
Connectors on the motor side 15
CONNECTORS REQUIRED FOR APPROVAL 86
Cooling Method (IEC60034-6) 84
COUPLING A SERVO MOTOR 28
Coupling a Servo Motor and Machine..... 28

<D>

Data Sheet..... 78

<E>

Explanation of Items..... 67

<F>

FEATURE 4
FEEDBACK SENSOR..... 89

<G>

Grounding (IEC60204-1) 85

<H>

Heat Protection (IEC60034-11)..... 85
HOW TO FILL IN THE SERVO MOTOR SELECTION DATA TABLE..... 64
HOW TO USE SERVO MOTORS 6

<L>

Layout of Connector Pins 99
LINEUP OF THE SERIES 5

<M>

Machine Movement per 1 Revolution of Motor Shaft.... 34

Mechanical specifications 70
Motor specifications and characteristics 73
Motor Speed (IEC60034-1) 83
Mounting Method (IEC60034-7) 84

<O>

OUTLINE DRAWINGS 123
Outline Drawings of Separate Pulsecoder 95
Output (IEC60034-1) 83

<P>

Performance Curves 75
Power Line Connectors (for Models β0.2*i*s and β0.3*i*s). 86
Power Line Connectors (for Models β0.4*i*s to β1*i*s) 86
Power Line Connectors (for Models β2*i*s to β3*i*s) 87
Power Line Connectors (for Models β8*i*s to β22*i*s) 88
Precautions for Using Linear Axis Feedback 35
Protection Type (IEC60034-5) 84
PULSECODER 90

<R>

Recommended Parts in Brake Circuits 102
REDUCING THE BRAKE SHAFT FALL AMOUNT 104
Remarks 85

<S>

SELECTING A MOTOR 40
SELECTING A MOTOR 44
SEPARATE PULSECODER 93
Separate Pulsecoder Specifications 93
Separate Pulsecoder Type and Designation 93
Separating and Disposing of a Servo Motor 11
Servo Motor Selection Data Table 64
SPECIFICATIONS AND CHARACTERISTICS 109
Specifications of moving object 68

<T>

Title 67
TYPES OF MOTORS AND DESIGNATION 107
TYPES OF MOTORS TO BE APPROVED 82
Types of Pulsecoders and Designation 90

<U>

USE ENVIRONMENT FOR SERVO MOTORS 7

Revision Record

FANUC AC SERVO MOTOR βis series DESCRIPTIONS (B-65302EN)

Edition	Date	Contents	Edition	Date	Contents
01	May, 2003	———————————————			



ООО «Ремстанмаш»
г. Смоленск, Верхне-Сенная, д.4, офис 223.
сайт. www.cnchelp.ru
Тел. 8-800-511-02-67
Тел. +7(499)704-02-67
Тел. 8-919-046-48-46 (WhatsApp, Viber)