MAGNETIC ROTARY ENCODER

AM

Absolute Encoder

SSI protocol

Magnetic Technology



AM36 and AM58 series' incremental/absolute encoders use magnetic technology and output up to 12 bit resolution through binary code. These encoders can have different signal modifications: incremental, serial interface, commutation.

AM36

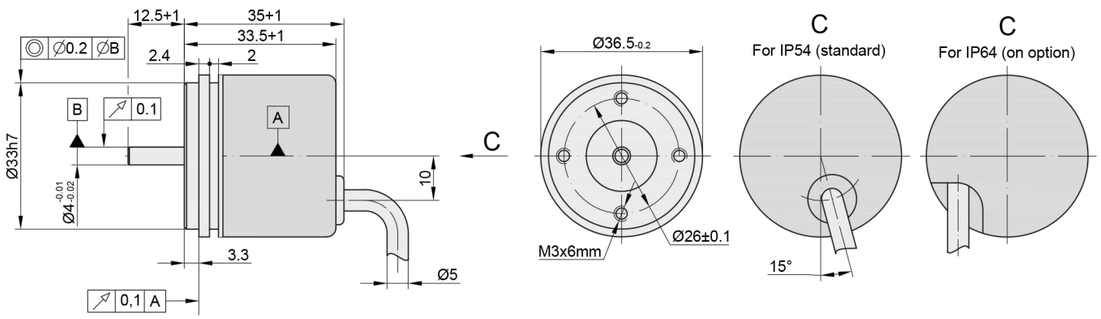

AM58

ENCODER MODIFICATION	OTHER MODIFICATIONS
AM58M	See A58 series data sheet
AM58B	See A58 series data sheet
AM58C	See A58 series data sheet
AM58C2	See A58 series data sheet
AM58C3	See A58 series data sheet
AM58D	See A58 series data sheet

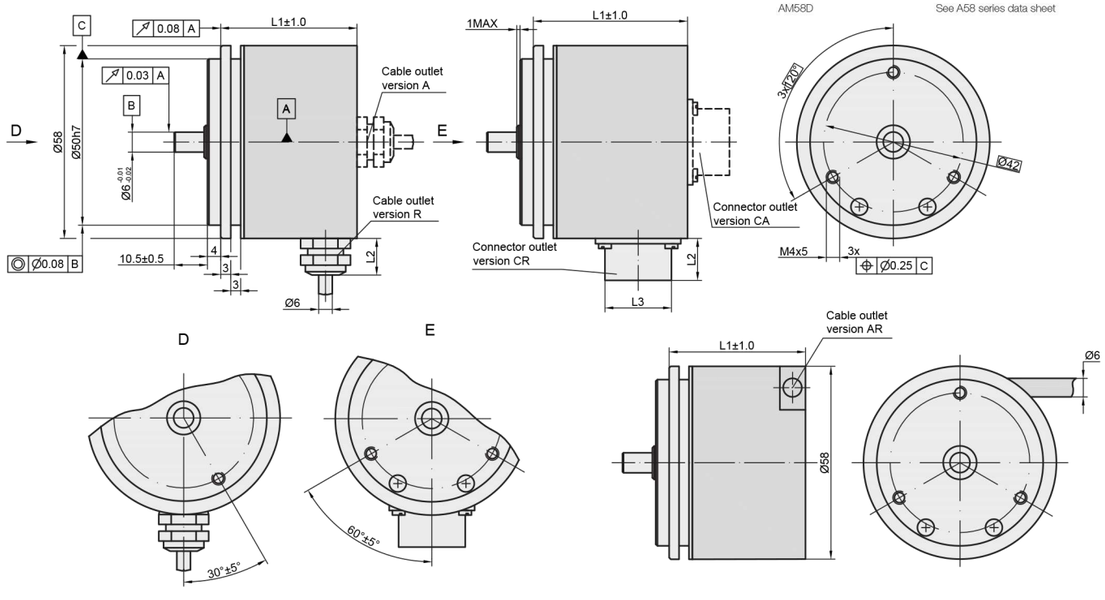

Connector type / cable outlet	ONC axial	RS10 axial	C12, C9 axial	ONC radial	RS10 radial	C12, C9 radial	Cable axial (ver. A)	Cable radial (ver. R)	Cable axial-radial (ver. AR)
L1	41 mm	41 mm	41 mm	54 mm	53 mm	53 mm	41 mm	41 mm	43 mm
L2	16 mm	9 mm	22 mm	16 mm	9 mm	22 mm	12 mm	12 mm	-
L3	M24	M14	M23	M24	M14	M23	-	-	-

РЕМСТАНМАШ
ТЕХНОЛОГИИ ДЛЯ ПРОИЗВОДСТВА

MECHANICAL DATA

AM58	
Maximum shaft speed	12000 rpm
Maximum shaft load: - axial - radial (at shaft end)	 10 N 20 N
Starting torque at 20°C	≤ 0.01 Nm
Rotor moment of inertia	< 15 gcm²
Protection (IEC 529)	up to IP67
Maximum weight without cable	0.25 kg
Operating temperature	-25...+85 °C
Storage temperature	-40...+125 °C
Maximum humidity (non-condensing)	98 %
Permissible vibration (55 to 2000 Hz)	≤ 100 m/s²
Permissible shock (5 ms)	≤ 300 m/s²

AM36	
Maximum shaft speed	10000 rpm
Maximum shaft load: - axial - radial (at shaft end)	 5 N 10 N
Starting torque at 20°C	≤ 0.002 Nm
Rotor moment of inertia	< 2 gcm²
Protection (IEC 529)	up to IP64
Maximum weight without cable	0.07 kg
Operating temperature	-25...+85 °C
Storage temperature	-40...+125 °C
Maximum humidity (non-condensing)	98 %
Permissible vibration (55 to 2000 Hz)	≤ 100 m/s²
Permissible shock (5 ms)	≤ 300 m/s²

ELECTRICAL DATA

Supply voltage - standard - optional	 +5V±5% +(10...30)V±5%
Light source	LED
Accuracy	±0.3 arc. degree
Resolution	2¹² (4096)
Code	binary
Output signals: - incremental - through synchronous serial interface - commutation	 TTL, HTL SSI UVW (pole number 2, 4, 6, 8, 10, 12, 14, 16)
Maximum operating frequency, kHz	300
Standard cable length	1m, without connector
Maximum cable length	25m

OUTPUT SIGNALS

TTL / HTL

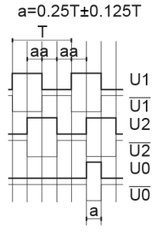

SSI timing diagram

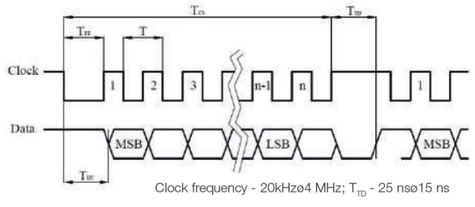

Clock frequency - 20kHzø4 MHz; T_{TD} - 25 nsø15 ns

UVW

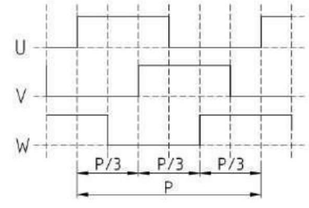

ACCESSORIES

CONNECTORS FOR CABLE	C9 9-pin round connector	C12 12-pin round connector	D9 9-pin flat connector
COUPLING	SC30		

ORDER FORM

AMX1 - X2 - X3 - X4 - X5 - X6/X7

Encoder Modification (X1):	Output signal version (X2):	Pole number for signal uvw (X3):	Bit number (X4):	Voltage Supply (X5):	Cable length and output (X6):	Connector type (X7):
36 - AM36 **58M** -AM58M **58B** - AM58B **58C** - AM58C **58C2** - AM58C2 **58C3** - AM58C3 **58D** - AM8D	**H1**- TTL **H2** - UVW **H3** - TTL-UVW **H4** - TTL - SSI **H5** - TTL - UVW - SSI **H6** - HTL **H7** - HTL - UVW **H8** - HTL - UVW - SSI	**P2** - 2 **P4** - 4 **P6** - 6 **P8** - 8 **P10** - 10 **P12** - 12 **P14** - 14 **P16** - 16	**B6** - 6 **B8** - 8 **B10** - 10 **B12** - 12	**05V** - +5V **30V** - +(10 to 30)V	**A01** - 1m (axial) **A02** - 2m (axial) **R03** - 3m (radial)	**W** - without connector **D9** - flat, 9 pin **C9** - round, 9pin **C12** - round, 12pin **PC10** - round, 10 pin

ORDER EXAMPLES: 1) AM36-H3-P6-6-05V-R01/W
2) AM58M-H4-B12-30V-A01/D9